# Land Rover Series II & IIA

## Repair Operation Manual

AKM8159

BY APPOINTMENT TO HER MAJESTY THE QUEEN
BL CARS LIMITED - BIRMINGHAM
MANUFACTURERS OF ROVER CARS LAND-ROVERS
RANGE ROVERS AND AUSTIN CARS

BY APPOINTMENT TO HER MAJESTY QUEEN ELIZABETH
THE QUEEN MOTHER
BL CARS LIMITED COVENTRY AND BIRMINGHAM
MANUFACTURERS OF DAIMLER, JAGUAR AND ROVER CARS
AND LAND-ROVERS

BY APPOINTMENT
TO H.R.H. THE PRINCE OF WALES
LAND ROVER LIMITED - SOLIHULL
MANUFACTURERS OF MOTOR VEHICLES

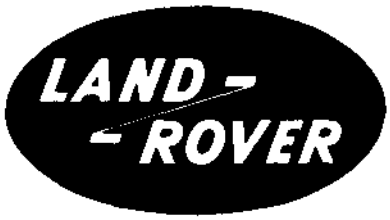


# LAND ROVER
# Series II & IIA

## REPAIR OPERATION MANUAL

**Published by**

**Land Rover Ltd**

**A Managing Agent for Land Rover UK Limited**

**PUBLICATION No. AKM8159 (EDITION 1)**

**Part 1**

**Land Rover Limited**
**Lode Lane**
**Solihull**
**West Midlands B92 8NW**
**England**

**LAND-ROVER 88**

(88 inch—2,23 m—wheel base)

**LAND-ROVER 109**

(109 inch—2,76 m—wheel base)

The two models shown are typical examples of their range, which are produced with a wide choice of body designs

# INTRODUCTION

This Repair Operation Manual covers all overhaul and repair procedures for the 'basic' Land-Rover, briefly described below, but does not include the use and overhaul of 'Optional extra equipment', which is the subject of a separate publication.

The 'basic' Land-Rover is produced in two wheel base lengths, 88 inch and 109 inch (2,23 m and 2,76 m), with a choice of three engine types; 2¼ litre—four cylinder Petrol and Diesel and 2.6 litre—six cylinder Petrol. Other equipment, including fuel system, electrical equipment, drive units brakes and body vary according to model and choice.

Identification of a particular model can be made by referring to the vehicle number and the chart on the following page. The Vehicle number is stamped on a plate mounted inside the driving compartment.

Although this Manual applies specifically to Bonneted Control models, most of the overhaul procedures also apply to Forward Control models when the units are removed from the vehicle.

© Rover Group Limited

This book is published by Brooklands Books Limited under licence and is based upon text and illustrations protected by Copyright by Land Rover Limited and may not be reproduced, transmitted or copied by any means without the prior written permission of Rover Group Limited.

# COMMENCING VEHICLE NUMBERS

## PETROL MODELS, 4 CYLINDER—2¼ LITRE ENGINE

| | 1959 88 Series II | 1960 88 Series II | 1961 88 Series II | 88 Series IIA |
|---|---|---|---|---|
| Home, RHStg | 141900001 | 141000001 | 141100001 | 24100001A |
| Export, RHStg | 142900001 | 142000001 | 142100001 | 24200001A |
| Export, RHStg, CKD | 143900001 | 143000001 | 143100001 | 24300001A |
| Export, LHStg | 144900001 | 144000001 | 144100001 | 24400001A |
| Export, LHStg, CKD | 145900001 | 145000001 | 145100001 | 24500001A |

| | 1958 109 Series II | 1959 109 Series II | 1960 109 Series II | 1961 109 Series II | 109 Series IIA |
|---|---|---|---|---|---|
| Home, RHStg | 151800001 | 151900001 | 151000001 | 151100001 | 25100001A |
| Export, RHStg | 152800001 | 152900001 | 152000001 | 152100001 | 25200001A |
| Export, RHStg, CKD | 153800001 | 153900001 | 153000001 | 153100001 | 25300001A |
| Export, LHStg | 154800001 | 154900001 | 154000001 | 154100001 | 25400001A |
| Export, LHStg, CKD | 155800001 | 155900001 | 155000001 | 155100001 | 25500001A |

| | | Series IIA |
|---|---|---|
| Home, RHStg, 88 Station Wagon | From March 1965 onwards. Vehicle numbers prior to this date are the same as for 88 | 31500001B |
| Export, RHStg, 88 Station Wagon | | 31600001B |
| Export, RHStg, CKD, 88 Station Wagon | | 31700001B |
| Export, LHStg, 88 Station Wagon | | 31800001B |
| Export, LHStg, CKD, 88 Station Wagon | | 31900001B |

| | 1959 Series II | 1960 Series II | 1961 Series II | Series IIA |
|---|---|---|---|---|
| Home, RHStg, 109 Station Wagon | 161900001 | 161000001 | 161100001 | 26100001A |
| Export, RHStg, 109 Station Wagon | 162900001 | 162000001 | 162100001 | 26200001A |
| Export, RHStg, CKD, 109 Station Wagon | 163900001 | 163000001 | 163100001 | 26300001A |
| Export, LHStg, 109 Station Wagon | 164900001 | 164000001 | 164100001 | 26400001A |
| Export, LHStg, CKD, 109 Station Wagon | 165900001 | 165000001 | 165100001 | 26500001A |

## PETROL MODELS, 6 CYLINDER—2.6 LITRE ENGINE

| | 109 Series IIA |
|---|---|
| Home, RHStg | 34500001D |
| Export, RHStg | 34600001D |
| Export, RHStg, CKD | 34700001D |
| Export, LHStg | 34800001D |
| Export, LHStg, CKD | 34900001D |

| | Series IIA |
|---|---|
| Home, RHStg, 109 Station Wagon | 35000001D |
| Export, RHStg, 109 Station Wagon | 35100001D |
| Export, RHStg, CKD, 109 Station Wagon | 35200001D |
| Export, LHStg, 109 Station Wagon | 35300001D |
| Export, LHStg, CKD, 109 Station Wagon | 35400001D |

## DIESEL MODELS, 4 CYLINDER—2¼ LITRE ENGINE

| | 88 Series IIA |
|---|---|
| Home, RHStg | 27100001A |
| Export, RHStg | 27200001A |
| Export, RHStg, CKD | 27300001A |
| Export, LHStg | 27400001A |
| Export, LHStg, CKD | 27500001A |

| | 109 Series IIA |
|---|---|
| Home, RHStg | 27600001A |
| Export, RHStg | 27700001A |
| Export, RHStg, CKD | 27800001A |
| Export, LHStg | 27900001A |
| Export, LHStg, CKD | 28000001A |

| | | Series IIA |
|---|---|---|
| Home, RHStg, 88 Station Wagon | From March 1965 onwards. Vehicle numbers prior to this date are the same as for 88 | 32000001B |
| Export, RHStg, 88 Station Wagon | | 32100001B |
| Export, RHStg, CKD, 88 Station Wagon | | 32200001B |
| Export, LHStg, 88 Station Wagon | | 32300001B |
| Export, LHStg, CKD, 88 Station Wagon | | 32400001B |

| | Series IIA |
|---|---|
| Home, RHStg, 109 Station Wagon | 28100001A |
| Export, RHStg, 109 Station Wagon | 28200001A |
| Export, RHStg, CKD, 109 Station Wagon | 28300001A |
| Export, LHStg, 109 Station Wagon | 28400001A |
| Export, LHStg, CKD, 109 Station Wagon | 28500001A |

## LOCATION OF CAR AND UNIT NUMBERS

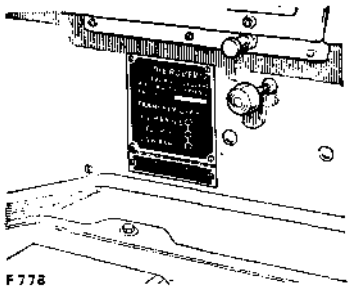


**Vehicle and chassis number**

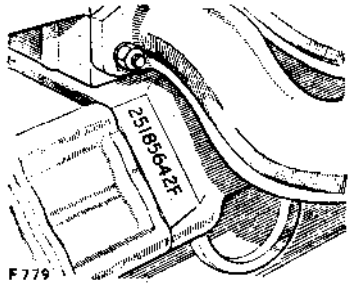


**Engine number**

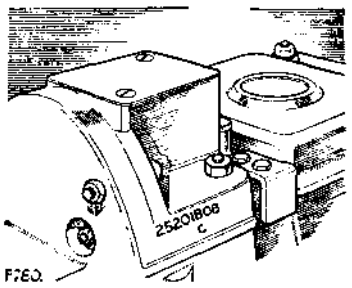


**Gearbox number**

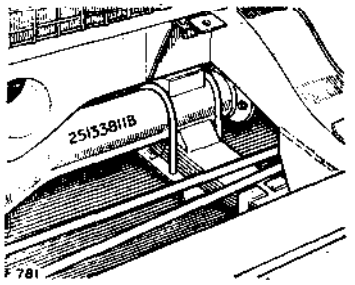


**Front and rear axle number**

### Layout of the Workshop Manual

This Workshop Manual is designed to assist those responsible for the maintenance and overhaul of the Land-Rover. The subject matter is sectionalised as detailed in the General Index, and the pages are numbered within those sections. A further sub-index will be found at the beginning of each section.

Operating instructions and details of routine maintenance will be found in the Owner's Instruction and Maintenance Manuals, a copy of each will be found in the literature pack supplied with the car.

As the Manual covers both Home and Export models, reference is made throughout the text to the 'left-hand' (LH) and 'right-hand' (RH) sides of the vehicle, rather than to 'near-side' and 'off-side'. The 'left-hand side' is that to the left hand when the vehicle is viewed from the rear; similarly, 'left-hand steering' (LHStg) models are those having the driving controls on the left-hand side, again when the vehicle is viewed from the rear.

### Measurements

All measurements are given in Imperial measure with US and metric equivalents added where possible, but in certain cases this is not practicable and the Imperial figure must be used.

### Workshop technique

When undertaking any overhaul operation, it is advisable to follow a standard technique, which will ultimately save both time and trouble. Prior to dismantling, the unit should be thoroughly cleaned externally and, as the stripping progresses, components washed in paraffin or petrol before setting out in order on a large drip tray. Small parts, such as nuts and bolts, should be placed in boxes to prevent loss, and shims attached to their respective components to facilitate assembly. All joint washers, lockers, tab washers and split pins must be renewed on assembly.

When the unit is finally rebuilt, use only the recommended lubricants. See Section X.

### Operation times

These are not included in this Manual and are the subject of a separate publication.

### Workshop tools

In order to assist the operator when following details given in this Manual, a list of the tools required for the operation has been included.

In addition, details of any special tools which are necessary, are included in the heading of the operation for which they are required. See also Section Z.

**This new edition incorporates all applicable workshop information appertaining to the Land-Rover circulated by means of Land-Rover Service News Letters up to Vol. 3, No. 2.**

# Index to Sections

**See section title pages for detailed operation indexes**


| Section | Title |
|---|---|
| A-1 | ENGINE—2¼ litre Petrol |
| A-2 | ENGINE—2¼ litre Diesel |
| A-3 | ENGINE—2.6 litre Petrol |
| B | CLUTCH UNITS |
| C | GEARBOX |
| D | PROPELLER SHAFTS |
| E | REAR AXLE AND SUSPENSION |
| F | FRONT AXLE AND SUSPENSION |
| G | STEERING AND LINKAGE |
| H | BRAKE SYSTEM |
| J | CHASSIS |
| K | COOLING SYSTEM |
| L | FUEL SYSTEM |
| M | EXHAUST SYSTEM |
| N | ELECTRICAL EQUIPMENT |
| P | INSTRUMENTS AND CONTROLS |
| Q | BODY |
| R | WHEELS AND TYRES |
| X | LUBRICANTS AND SERVICING MATERIALS |
| Z | TOOLS |


**Note: A comprehensive, detailed index is included at the end of this manual.**

# SECTION A1—2½ LITRE PETROL ENGINE

# INDEX TO OPERATIONS—SECTION A1

**Note:** A comprehensive detailed index is included at the end of this manual


| Description of Listed Operations | Operation Number | |
|---|---|---|
| | Remove/Refit | Overhaul |
| Bonnet panel | A1-1 | — |
| Air cleaner—remove, clean and refit | A1-2 | — |
| Radiator and grille panel assembly | A1-3 | — |
| Front floor | A1-4 | — |
| Engine | A1-5 | — |
| Carburetter | A1-6 | Section L |
| Inlet and exhaust manifolds | A1-7 | A1-8 |
| Starter motor | A1-9 | Section N |
| Dynamo | A1-10 | Section N |
| Water pump | A1-11 | Section K |
| Thermostat housing | A1-12 | Section K |
| Fuel pump | A1-13 | Section L |
| Engine side covers | A1-14 | — |
| Oil filter, external, to replace element | A1-15 | — |
| Oil filter, external | A1-16 | A1-16 |
| Ignition timing procedure | A1-17 | — |
| Distributor and drive gears | A1-18 | Section N |
| Tappet adjustment | A1-19 | — |
| Valve gear, rocker shaft and push rods | A1-20 | A1-21 |
| Cylinder head | A1-22 | A1-23 |
| Tappet assemblies | A1-24 | — |
| Engine front cover and oil seal | A1-25 | — |
| Timing chain tensioner | A1-26 | — |
| Timing gears and chain, including valve timing | A1-27 | — |
| Crankcase sump | A1-28 | — |
| Oil pump | A1-29 | A1-30 |
| Clutch assembly and flywheel | A1-31 | Section B |
| Rear main bearing oil seal and flywheel housing | A1-32 | — |
| Pistons and connecting rods | A1-33 | A1-34 |
| Crankshaft and main bearings | A1-35 | A1-36 |
| Camshaft | A1-37 | — |
| Cylinder block and camshaft bearings | A1-38 | A1-38 |
| Reclamation of flywheel | A1-31 | A1-39 |

This Section concerns remove, refit and overhaul procedures for the 2¼ litre petrol engine.

When carrying out a complete engine overhaul, the section can be worked straight through in the order presented.

Alternatively, the individual operations which form the greater percentage of maintenance work undertaken by Distributors and Dealers, are detailed under appropriate headings, and will be found to be complete in themselves.

Some operations are marked with an asterisk * to indicate that they can be carried out with the engine installed. In all other cases it is necessary to remove the engine unit in order to carry out the work detailed.

Where LH (left-hand) or RH (right-hand) appears in the text, this indicates RH or LH side of vehicle or engine when viewed from the rear.

## Brief description of engine

The cylinder block is of cast iron. Re-boring is permitted up to a maximum of .040 in. (1,0 mm) oversize above the standard bore size of 3.562 in. (90,49 mm). Further reclamation is obtained by fitting cylinder liners and boring out to standard bore size. Liners may be re-bored up to .010 in. (0,25 mm) oversize.

The crankshaft is supported by three bearings. The thrust is taken by the centre bearing. The bearings are white-metal lined steel shells.

The camshaft is supported by four bearings and actuates roller type cam followers operating valve rockers through push rods, and lead/tin plated bronze slides. Adjustment is made on the adjusting screws on valve rockers. The bearings are white-metal lined steel shells.

The camshaft is chain driven and a chain tensioner is fitted.

The engine is lubricated by a pressure fed oil system which incorporates a pump located in the crankcase sump and an external full flow oil filter.

Engine component dimensions are provided in the Detail Data at the end of this Section.

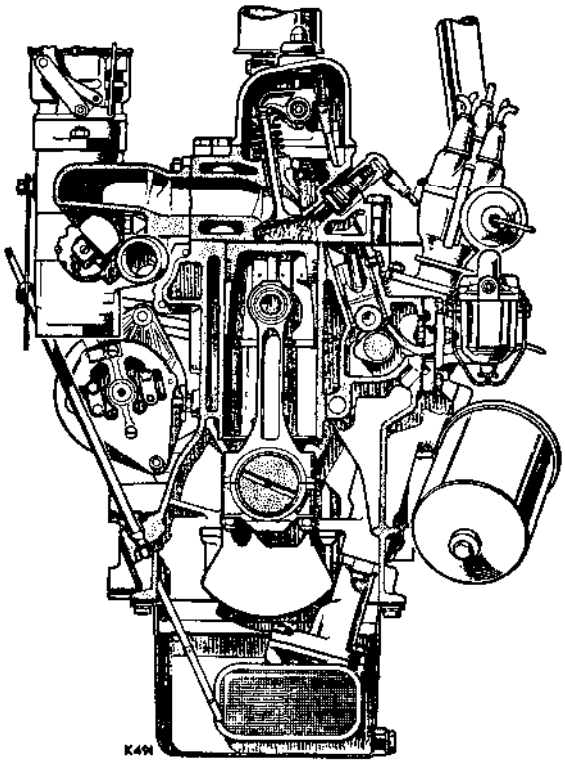


**Cross-section view of engine**

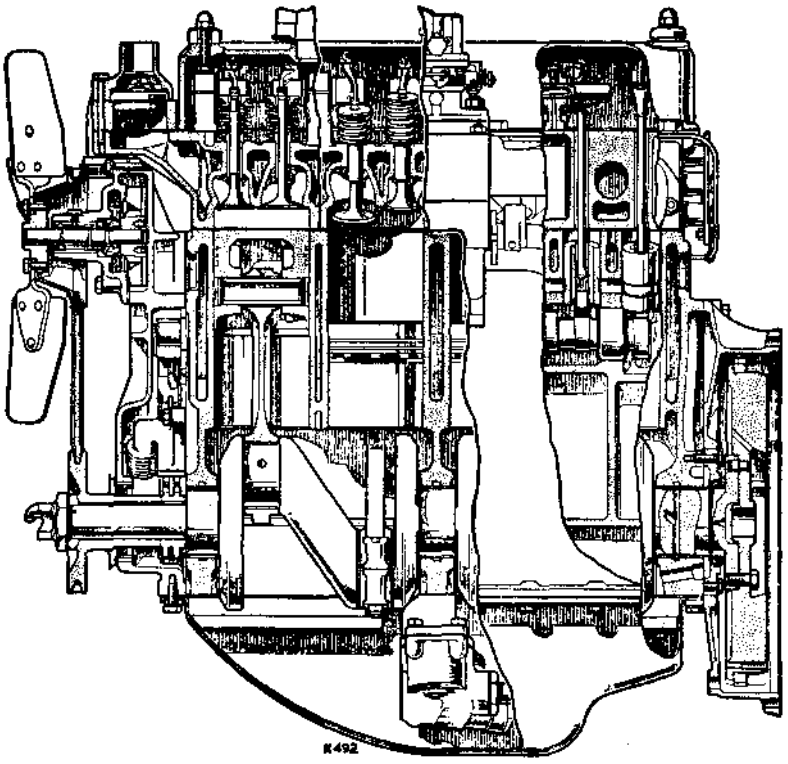


**Longitudinal section of engine**

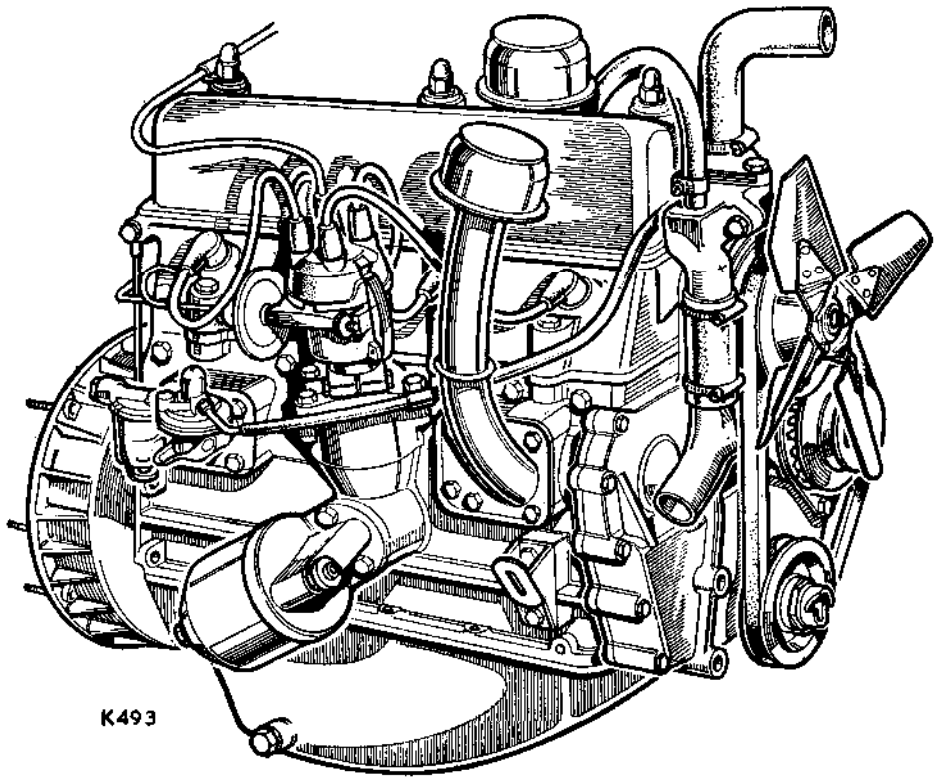


**General view of engine, RH side**

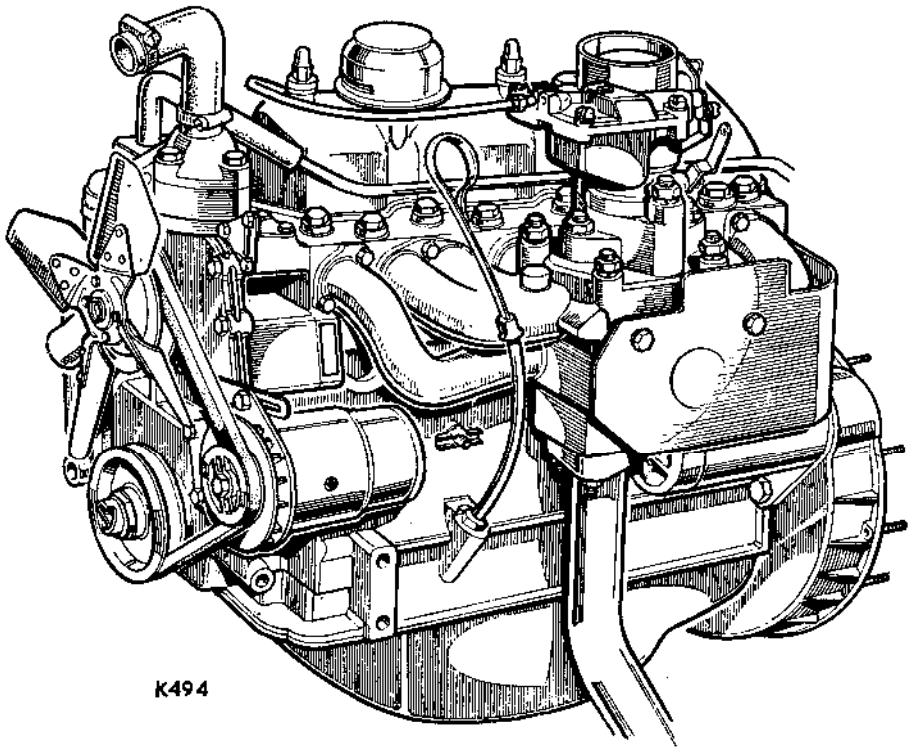


**General view of engine, LH side**

## *Bonnet panel, remove and refit—Operation A1-1

Workshop hand tools:
Screwdriver (medium), Pliers

### To remove

1. Remove the spare wheel from the bonnet panel, if fitted.
2. Remove fixings at prop rod and bonnet hinge.

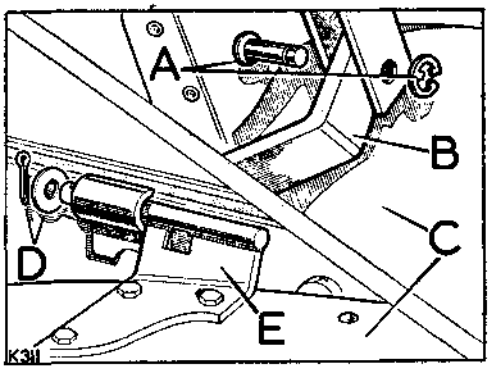


**Fig. A1-1. Fixings at bonnet panel**

A—Prop rod fixings
B—Bonnet prop rod
C—Bonnet panel
D—Bonnet hinge fixings, RH side only
E—Bonnet hinge

3. Remove bonnet panel.

### To refit

1. Refit the bonnet panel, using suitable coverings on the wings to avoid damage to paintwork.
2. Refit the spare wheel, if fitted, to bonnet panel.

## *Air cleaner, remove, clean and refit—Operation A1-2

Workshop hand tools:
Spanner sizes: $\frac{7}{16}$ in. AF open ended
Screwdriver (medium)

### To remove

1. Lift and prop bonnet.
2. Remove air intake elbow from carburetter.

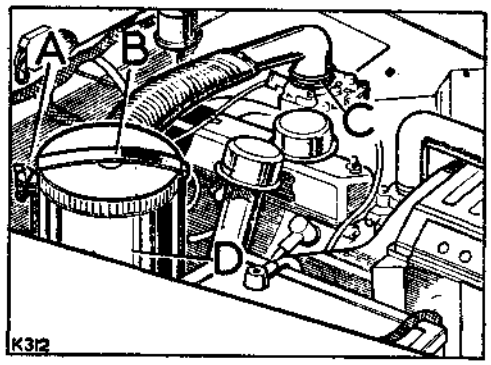


**Fig. A1-2. Air cleaner and elbow fixings**
A—Retaining strap fixings
B—Air cleaner retaining strap
C—Elbow fixings at carburetter
D—Air cleaner

3. Slacken the fixings and move aside the retaining strap.
4. Remove air cleaner complete with hose and elbow.

### To dismantle and clean

1. Separate the air cleaner body assembly from the oil container, retained by clips.

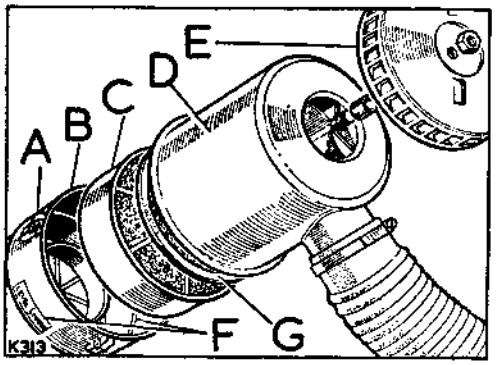


**Fig. A1-3. Exploded view of air cleaner**
A—Hinged clips
B—Oil container
C—Wire mesh unit
D—Air cleaner and mesh assembly
E—Air intake cap and fixings
F—Oil level mark
G—Sealing washer

2. Drain the oil and withdraw the wire mesh unit.
3. Wash all components in clean fuel.

### To assemble

1. Fill the oil container with clean engine oil to the oil level mark on the container. See Fig. A1-3.
2. Reverse the dismantling procedure, fitting a new sealing washer between the oil container and the air cleaner body.

### To refit

1. Refit the air cleaner and hose; if necessary, reposition the air cleaner body relative to the oil container to prevent the hinged clips from fouling on the retaining strap supports when fitted.
2. When fitting the elbow to the carburetter, ensure that the sealing sleeve is fitted correctly on to the carburetter before tightening clip.

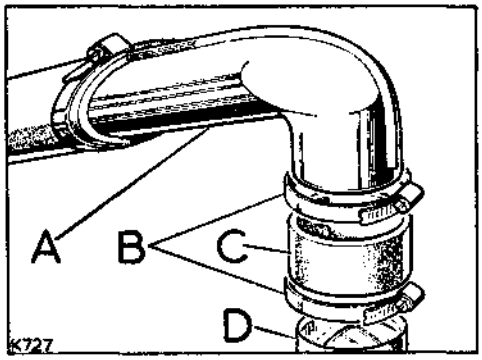


**Fig. A1-4. Air intake elbow details**
A—Elbow
B—Fixing clips
C—Sealing sleeve
D—Carburetter air intake

*Operations marked with an asterisk (*) can be carried out with the engine installed in the vehicle*

## *Radiator and grille panel assembly, remove and refit—Operation A1-3

Workshop hand tools:
Spanner sizes: $\frac{7}{16}$ in. x $\frac{1}{2}$ in. AF open ended, 2 off. 2 BA open ended
Screwdriver (medium), Pliers

**To remove**

1. Remove bonnet panel. Operation A1-1.
2. Disconnect battery leads.
3. Remove front apron panel.

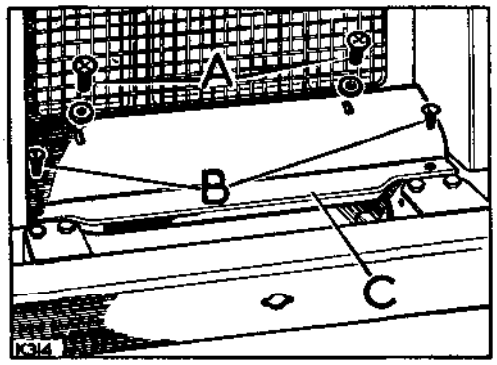


**Fig. A1-5. Apron panel fixings**

A—Fixings at cross member brackets
B—Fixings at side members
C—Apron panel

4. Remove nameplate and radiator grille.

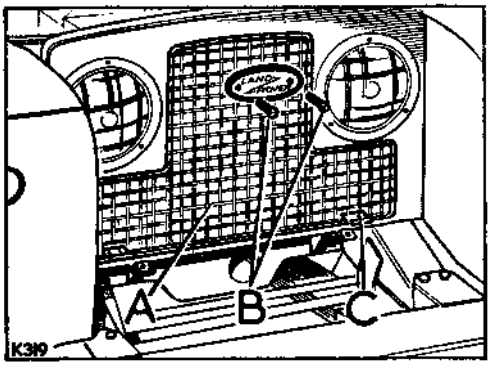


**Fig. A1-6. Radiator grille fixings**

A—Radiator grille
B—Fixings for nameplate and grille
C—Support brackets

5. Remove radiator cap, drain off coolant.

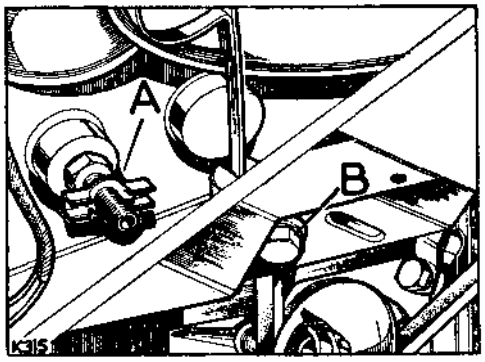


**Fig. A1-7. Coolant drain points location**

A—At engine block
B—At radiator

6. Remove the shroud from the radiator fan cowl.

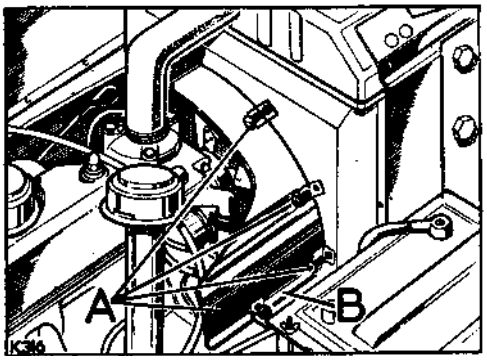


**Fig. A1-8. Fan shroud fixings**

A—Fixings for shroud
B—Fan shroud

7. Slacken the fixings and detach the radiator coolant hoses.
8. Remove the fan blades fixings and lower fan blades to rest on lower part of fan cowl. Remove the fan blades when access is obtained during grille panel removal.

*Operations marked with an asterisk (*) can be carried out with the engine installed in the vehicle*

## Operation A1-3—*continued*

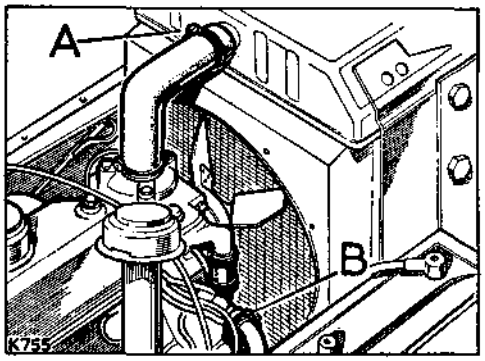


**Fig. A1-9. Radiator hose fixings**

A—Fixings at top hose
B—Fixings at bottom hose

9. Disconnect the electrical leads for the front lamps at the snap connectors and earth terminal. Withdraw leads clear of grille panel.

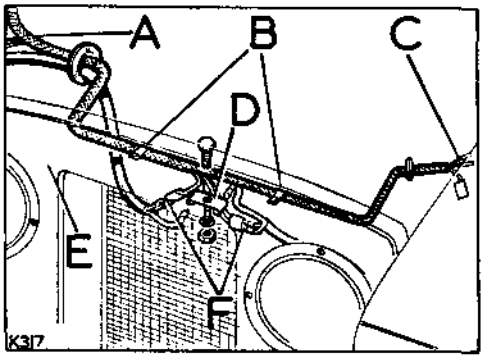


**Fig. A1-10. Front lamps electrical leads**

A—Electrical leads harness
B—Cable clips for harness
C—Wing lamp leads snap connectors
D—Earth connection
E—Grille panel
F—Headlamp leads snap connectors

10 Remove the grille panel to front wings fixings, the securing nuts and washers are located in the respective wheelarches.

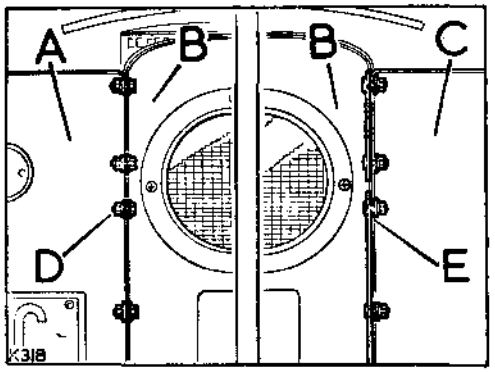


**Fig. A1-11. Radiator grille panel fixings**

A—Front wing, RH side
B—Radiator grille panel
C—Front wing, LH side
D—Fixings at RH side
E—Fixings at LH side

11. Remove the grille panel fixings at the brackets on the chassis cross member.

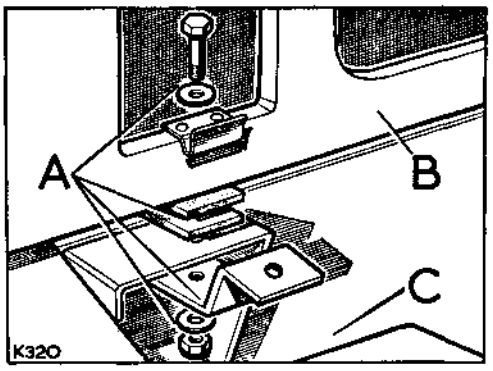


**Fig. A1-12. Fixings at chassis cross member**

A—Panel fixings
B—Radiator grille panel
C—Chassis cross member

12. Carefully withdraw the assembly and the previously released fan blades from the engine compartment.

### To refit

1. Position the radiator and grille panel assembly on to the vehicle. Fit the fan blades to the fan pulley before engaging the grille panel fixings. See Figs. A1-11 and A1-12 for fixings details.

## Operation A1-3—*continued*

2. Refit the electrical leads through the grille panel grommets and make the electrical connections at the snap connectors and earth terminal, referring to the appropriate circuit diagram, Section N.
3. Refill the engine coolant system, allowing a full flow through the drain taps before closing them. See Fig. A1-7 for coolant drain taps location. Fill the radiator header tank to within ½ in. to ¾ in. (12 mm to 19 mm) below the bottom of the filler neck.

**COOLANT SYSTEM**
**Bonneted Control Model, 2¼ Litre Petrol**

| | Capacity | Imperial Unit | US Unit | Litres | Antifreeze | Frost Precaution |
|---|---|---|---|---|---|---|
| 88 | 18 pints | 18 pints | 21½ pints | 10,25 | 33⅓% | —25°F<br>—32°C |
| 109 | 18 pints | 18 pints | 21½ pints | 10,25 | 33⅓% | —25°F<br>—32°C |

4. Refit the front apron panel and reconnect the battery leads.
5. Refit the bonnet panel. Operation A1-1.

## *Front floor, remove and refit—Operation A1-4

Workshop hand tools:
Spanner sizes: $\frac{7}{16}$ in. AF, $\frac{7}{16}$ in. BSF open end, $\frac{7}{16}$ in. AF socket
Screwdriver (medium)

### To remove

1. Unscrew the knob and locknut from the transfer gear lever.
2. Remove the fixings and withdraw the dust cover from the transfer gear lever.
3. Unscrew the knob and locknut from the four-wheel drive lever, and withdraw the spring and ferrule.
4. Remove both halves of the front floor board.
5. Remove the gearbox tunnel cover.
6. Remove the gearbox tunnel front panel.

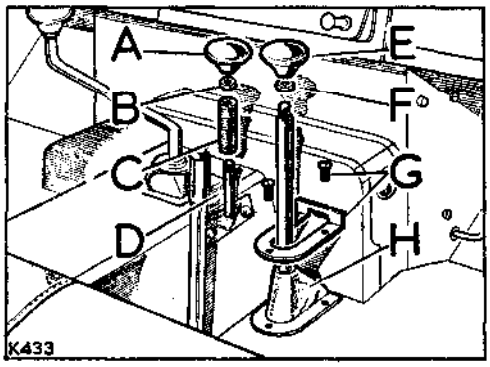


**Fig. A1-13. Four wheel drive and transfer levers**

A—Knob, four-wheel drive lever
B—Locknut for knob
C—Spring
D—Ferrule
E—Knob, transfer gear lever
F—Locknut for knob
G—Fixings for dust cover
H—Dust cover

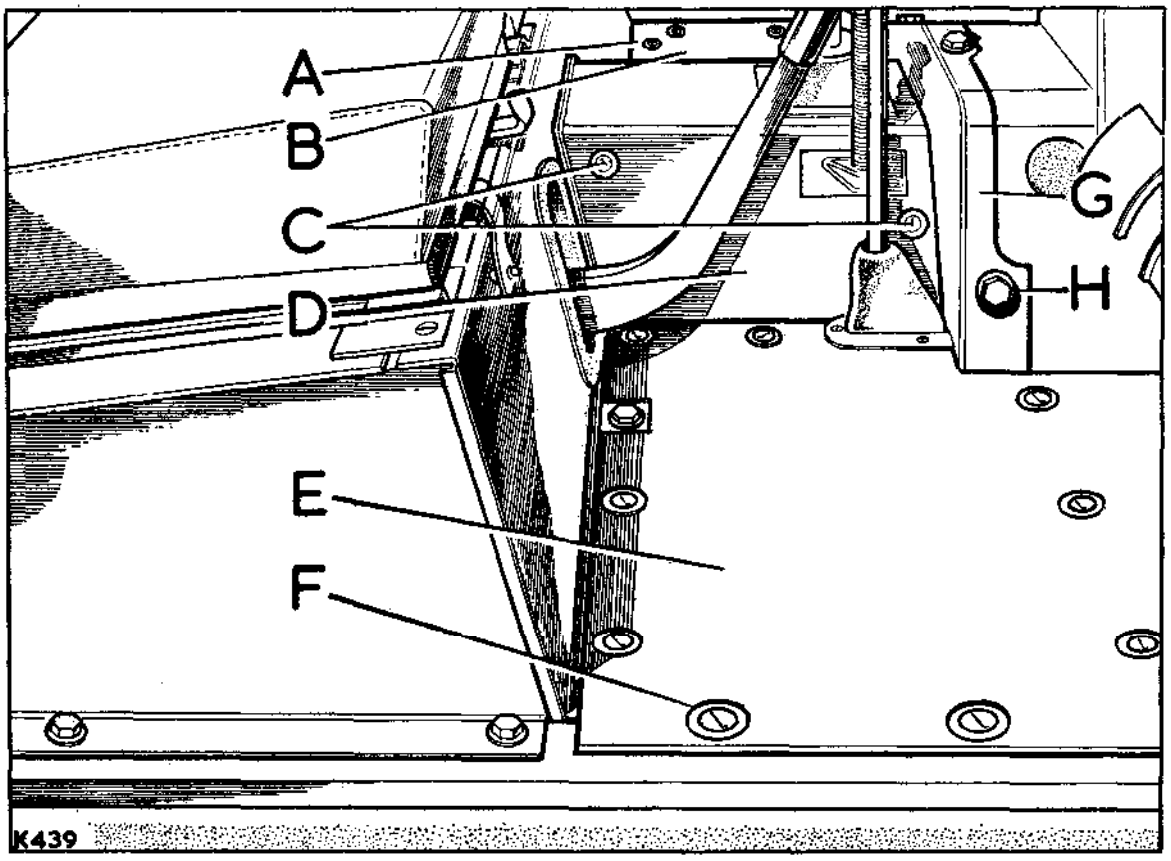


**Fig. A1-14. Front floor**

A—Fixings (9 off), left-hand floor board
B—Floor board, left-hand
C—Fixings (4 off), tunnel cover
D—Gearbox tunnel cover
E—Floor board, right-hand
F—Fixings (12 off), right-hand floor board
G—Front panel for gearbox tunnel cover
H—Fixings (4 off), front panel

*Operations marked with an asterisk (*) can be carried out with the engine installed in the vehicle*

## Operation A1-4—*continued*

### To refit

1. Reverse the removal procedure, using waterproof sealant between the joint flanges of the front floor and the chassis. A suitable sealant is 'Sealastrip', manufactured by Expandite Ltd., Chase Road, London NW10, England.
2. Adjust the four-wheel drive lever during assembly, as follows: Fit the ferrule, spring and locknut to the lever, depress the lever and adjust the locknut until the compressed spring length is 2 5/16 in. —1/16 in. (58 mm —1 mm), then fit the knob and tighten the locknut.

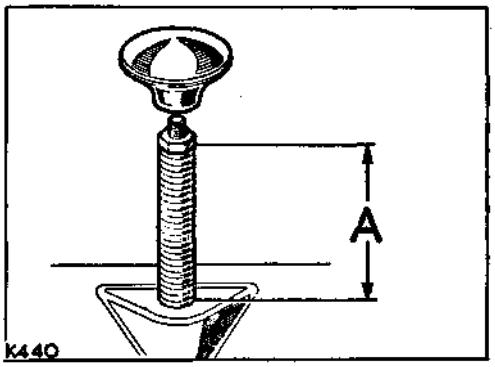


**Fig. A1-15. Adjusting four-wheel drive control lever**

A—2 5/16 in. —1/16 in. (58 mm —1 mm)

## Engine, remove and refit—Operation A1-5

Workshop hand tools:
Spanner sizes: $\frac{7}{16}$ in. x $\frac{1}{2}$ in. AF (2 off) open end
$\frac{5}{8}$ in., $\frac{11}{16}$ in. AF open end
$\frac{7}{16}$ in., $\frac{1}{2}$ in. AF ring
$\frac{1}{2}$ in., $\frac{9}{16}$ in. AF socket
$\frac{5}{16}$ in., $\frac{3}{8}$ in. BSF open end
2 BA open end
Pliers, Screwdriver (medium)

Special tools:
Lifting sling for engine, Part No. 600963

**To remove**

1. Remove the bonnet panel. Operation A1-1.
2. Remove air cleaner. Operation A1-2.
3. Remove radiator and grille panel complete. Operation A1-3.
4. Remove the front floor. Operation A1-4.
5. Disconnect the following items at the left-hand side of the engine:
   (a) Front exhaust pipe. Fig. A1-27 refers.
   (b) Heater hoses if fitted.
   (c) Carburetter linkage at ball joint.
   (d) Cold start inner and outer cables at carburetter.
   (e) Distributor leads at ignition coil.
   (f) Engine earth cable. Fig. A1-25 refers.
   (g) Engine mounting rubber upper fixing. Fig. A1-19 refers.

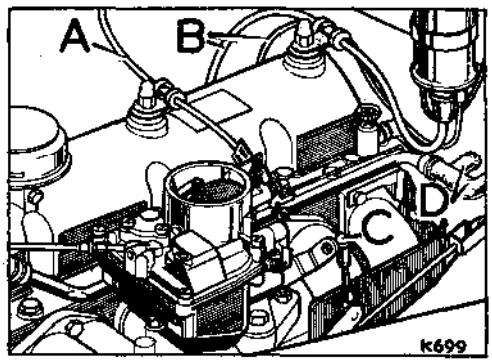


**Fig. A1-16. View of engine compartment, LH side**

A—Cold start cable
B—Distributor leads
C—Carburetter linkage ball joint
D—Heater hoses, if fitted

6. Disconnect the following items at the right-hand side of the engine:
   (a) Fuel inlet pipe at fuel pump.
   (b) Battery lead at clip adjacent to fuel pump.
   (c) Starter motor leads at dash panel.
   (d) Dynamo leads at voltage regulator.
   (e) Engine electrical leads at snap connectors adjacent to dash. Fig. A1-21 refers.
   (f) Release disconnected cables from retaining clips at dash panel.
   (g) Release speedometer drive cable from cable clip. If necessary, disconnect the vacuum pipe from the distributor to free the drive cable during engine removal.
   (h) Engine mounting rubber upper fixing. Fig. A1-19 refers.

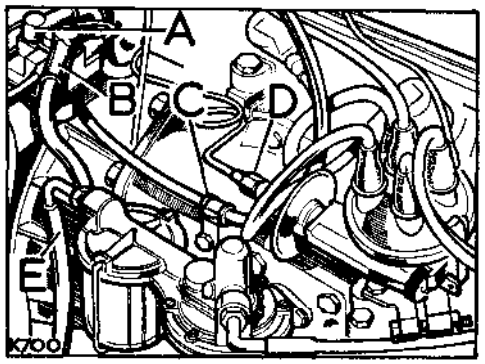


**Fig. A1-17. View of engine compartment, RH side, with air cleaner removed**

A—Starter leads
B—Battery lead
C—Speedometer drive cable clip
D—Vacuum pipe to distributor
E—Fuel inlet pipe

7. Fit suitable lifting equipment and support the engine weight.

## Operation A1-5—*continued*

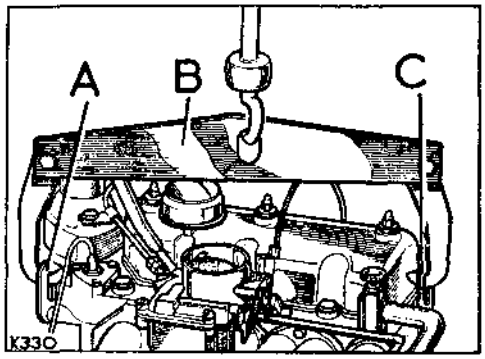


**Fig. A1-18. Engine lifting sling in position**

A—Front lifting bracket
B—Lifting sling, Part No. 600963
C—Rear lifting bracket

8. Remove the engine front mounting rubbers as follows:

   At LH side—remove lower centre fixing from suspension rubber.

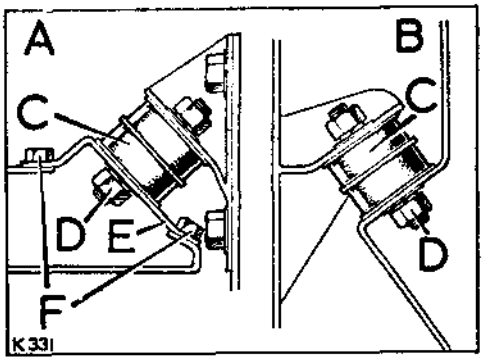


**Fig. A1-19. Engine front mounting details**

A—LH side mounting
B—RH side mounting
C—Suspension rubbers
D—Lower centre fixing
E—Support bracket at RH side fixing
F—Support bracket fixings

   At RH side—remove support bracket fixings as the lower centre fixing on RH suspension rubber is inaccessible when fitted.

9. Lift the engine sufficient to withdraw the LH side suspension rubber and the RH side suspension rubber and bracket complete, then lower engine to its original position to maintain alignment with the gearbox.

10. Remove the fixings securing the bell housing to the flywheel housing.

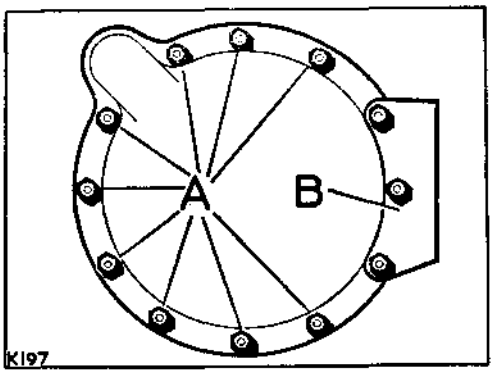


**Fig. A1-20. Location of bell housing fixings, view from cab**

A—Fixings, bell housing to engine
B—Fixings, clutch slave cylinder mounting

11. Support the gearbox assembly, using a suitable packing block or a jack.

12. Pull the engine forward sufficient to disengage the drive from the gearbox. Ensure that all cables, pipes, etc. are clear then hoist the engine from the vehicle.

**Note:** Where replacement of engine mounting feet is necessary, if using spring washers in place of the previously used lockplates on the engine mounting feet to cylinder block fixings, torque load the fixings to 80 lb ft.

## Operation A1-5—*continued*

**To refit**

1. Engage a gear to prevent gearshaft rotation. Offer engine to gearbox. It may be necessary to rotate the engine sufficient to align the gearbox primary pinion with the clutch plate splines. When aligned, push the engine fully to the rear and secure the bell housing to the flywheel housing, tightening the fixings evenly.
2. Lift the engine sufficient to remove the packing or jack from beneath the gearbox and insert the engine front mounting rubbers.
3. Lower the engine and fit the upper and lower fixings to the engine mountings. Fig. A1-19 refers.
4. Remove the engine lifting sling.
5. Secure the speedometer drive cable in the cable clip adjacent to the fuel pump.
6. Connect the engine electrical leads at the snap connectors at rear RH side of engine compartment.

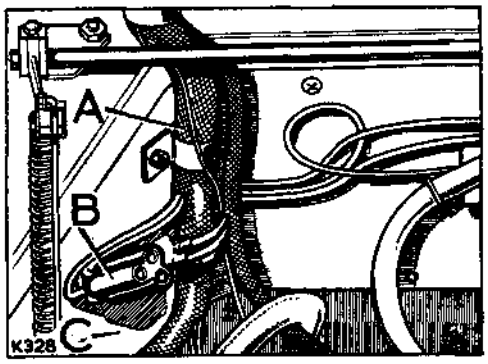


**Fig. A1-21. Location of snap connectors**

A—Engine compartment harness
B—Snap connectors for oil pressure light, choke warning light and coolant temperature gauge
C—Dash panel, RH side engine compartment

7. Connect the fuel inlet pipe to the fuel pump and secure the battery lead in the adjacent cable clip.

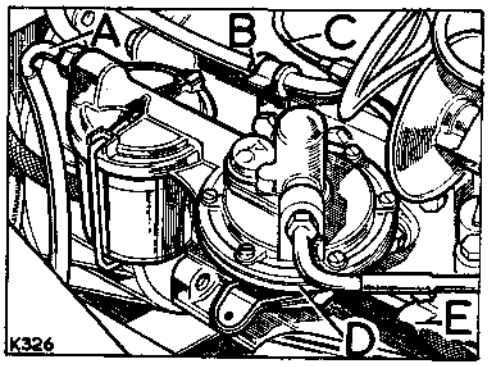


**Fig. A1-22. Fuel pump location, RH side engine block**

A—Fuel inlet pipe
B—Speedometer cable clip
C—Distributor vacuum pipe, refit if previously disconnected
D—Fuel pump
E—Battery lead clip

8. Connect the dynamo and starter motor leads at dash panel. Figs. A1-17 and A1-23 refer.

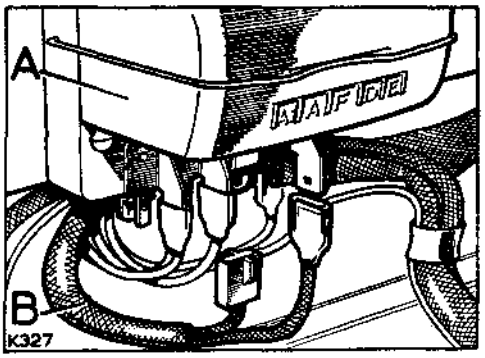


**Fig. A1-23. Electrical leads at dash panel, RH side**

A—Voltage regulator
B—Dynamo feed leads

## Operation A1-5—*continued*

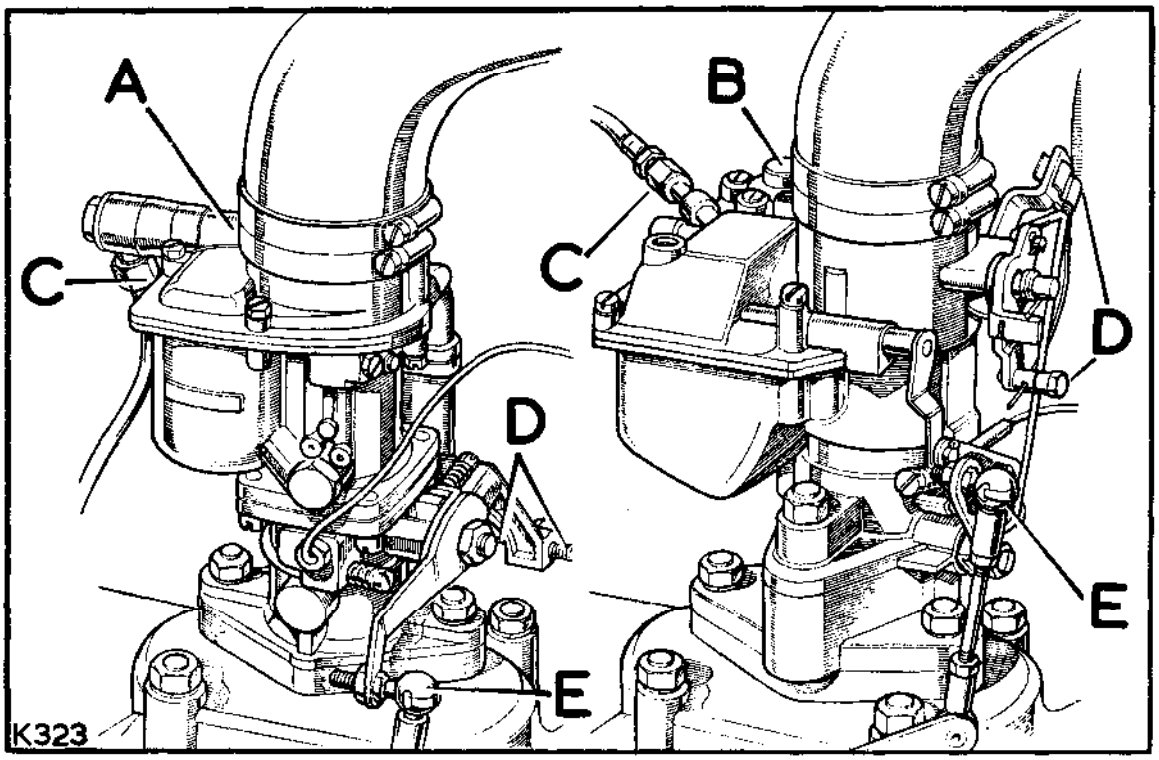


**Fig. A1-24. Carburetter linkage**

A—Carburetter, Solex type
B—Carburetter, Zenith type
C—Fuel inlet connection
D—Fixing, cold start inner and outer cable
E—Throttle linkage ball joint

9. Connect the carburetter linkage.
10. Connect the engine earth cable.
11. Connect the distributor leads at the ignition coil.

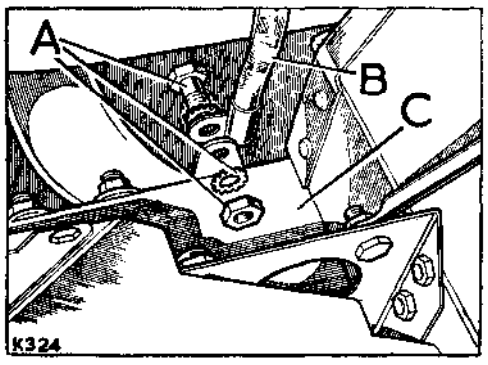


**Fig. A1-25. Earth cable location**

A—Earth cable fixings
B—Earth cable
C—Chassis LH side member

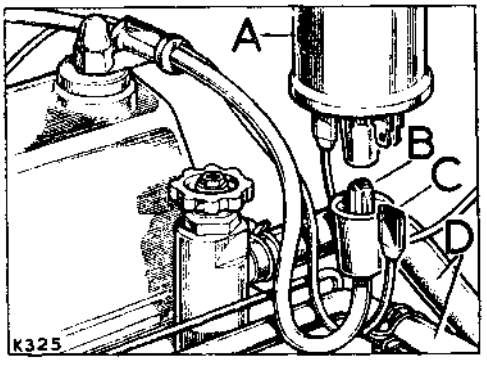


**Fig. A1-26. Ignition coil and heater hoses, LH side**

A—Ignition coil
B—High tension lead
C—Low tension lead
D—Heater hoses

## Operation A1-5—*continued*

12. Connect the heater hoses, if fitted, in engine compartment.
13. Connect the front exhaust pipe to the exhaust manifold.
14. Refit the front floor. Operation A1-4.
15. Refit the radiator and grille panel. Operation A1-3.
16. Refit the air cleaner. Operation A1-2.
17. Refit the bonnet panel. Operation A1-1.

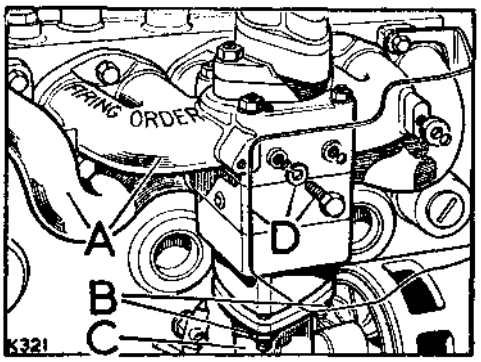


**Fig. A1-27. Front exhaust pipe fixings**

A—Exhaust manifold
B—Fixings for front exhaust pipe
C—Front exhaust pipe
D—Heat shield and fixings, if fitted

## *Carburetter, remove and refit—Operation A1-6

*(For overhaul information, Section L refers)*

Workshop hand tools:
Spanner sizes: 2 BA, $\frac{5}{16}$ in. Whitworth, $\frac{9}{16}$ in. AF open ended

**To remove**

1. Lift and prop bonnet panel.
2. Disconnect battery.
3. Disconnect controls at RH side of carburetter.

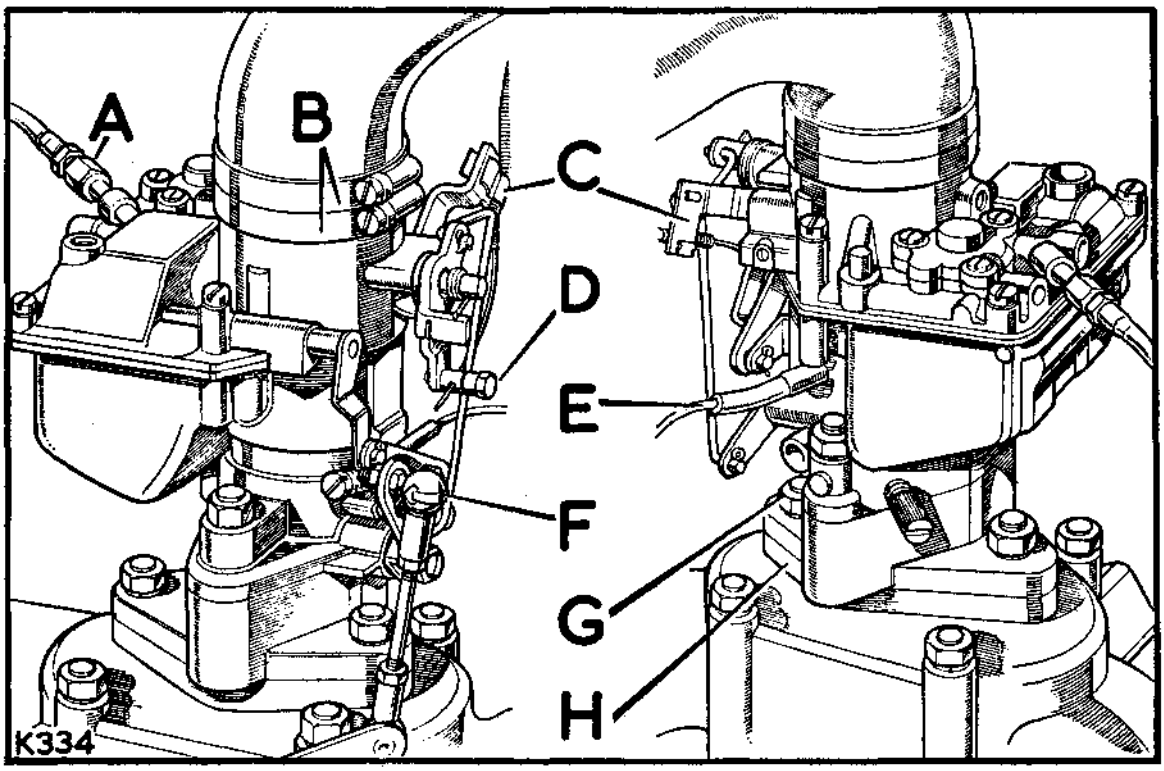


**Fig. A1-28. Zenith carburetter, where fitted**

A—Fuel inlet connection
B—Air inlet hose clips
C—Fixing for cold start outer cable
D—Fixing for cold start inner cable
E—Vacuum pipe
F—Thottle linkage
G—Fixings
H—Adaptor and joint washers

*Operations marked with an asterisk (*) can be carried out with the engine installed in the vehicle*

## Operation A1-6—*continued*

4. Disconnect air intake connection, and the carburetter controls at LH side.

5. Remove fixings and lift off carburetter, adaptor piece and joint washers.

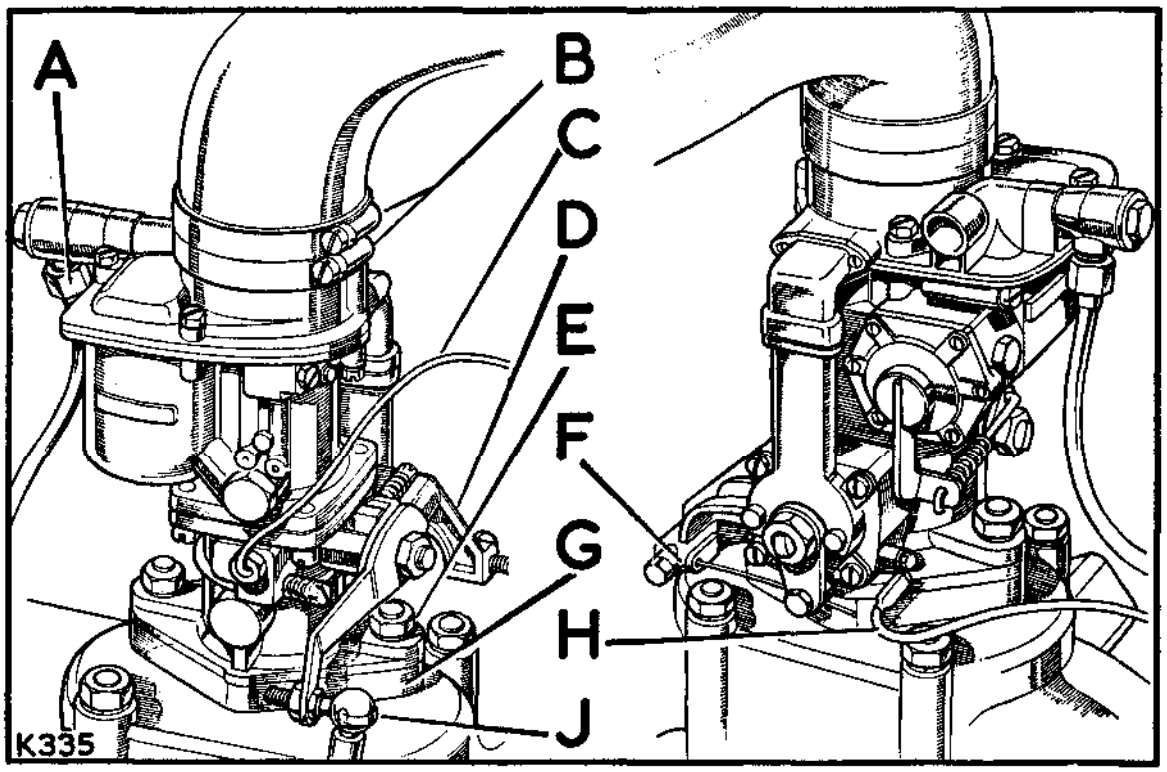


**Fig. A1-29. Solex carburetter, where fitted**

A—Fuel inlet connection
B—Air intake connection
C—Vacuum pipe to distributor
D—Cold start inner cable
E—Carburetter fixings
F—Cold start outer cable
G—Carburetter adaptor piece and joint gaskets
H—Feed lead for heater, where fitted
J—Throttle linkage ball joint

**To refit**

1. Refit carburetter, manifold adaptor and joint washers.
2. Reconnect all carburetter linkage. See Fig. A1-28 and Fig. A1-29. When the cold start cable is connected, check that the maximum travel on the carburetter linkage is obtainable in both directions.
3. Refit battery leads and close bonnet panel.

## *Inlet and exhaust manifold, remove and refit—Operation A1-7

*(For overhaul information, Operation A1-8 refers)*

Workshop hand tools:
Spanner sizes: 2 BA, $\frac{5}{16}$ in. Whit, $\frac{1}{2}$ in. AF, $\frac{9}{16}$ in. AF open end, $\frac{1}{2}$ in. AF socket
Screwdriver (medium), Pliers

Special tools:
Torque wrench

### To remove

1. Remove bonnet panel. Operation A1-1.
2. Remove carburetter. Operation A1-6.
3. Remove the exhaust heat shield if fitted.
4. Disconnect front exhaust pipe from manifold.

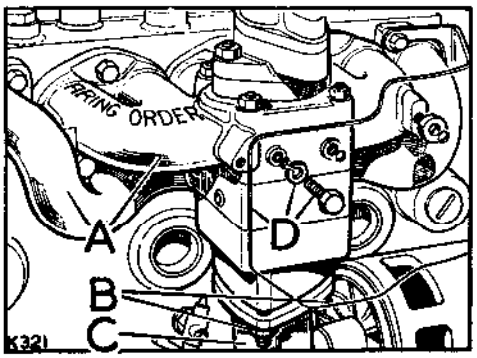


**Fig. A1-30. Front exhaust pipe fixings**

A—Exhaust manifold
B—Fixings for front exhaust pipe
C—Front exhaust pipe
D—Heat shield and fixings, if fitted

5. Remove fixings and withdraw inlet and exhaust manifolds complete. Remove joint washer.

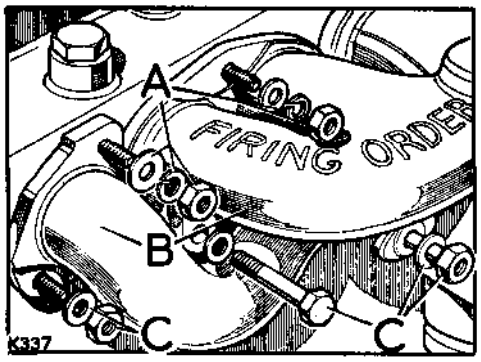


**Fig. A1-31. Manifold fixings to cylinder head**

A—Upper fixings
B—Manifolds assembly
C—Lower fixings

### To refit

**Note:** Where a replacement joint washer is required, early and late types are available; the early type is a one-piece washer for both inlet and exhaust manifolds, the late type washers (2 off) are for the inlet manifold only with the exhaust manifold and cylinder head in metal-to-metal contact. For replacement purposes use joint washers of the type originally fitted to the particular engine.

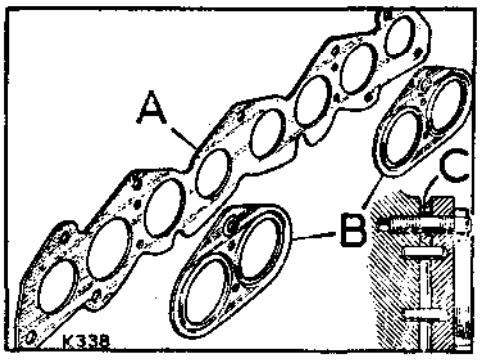


**Fig. A1-32. Manifold joint washers**

A—Early type, for inlet and exhaust manifold
B—Late type, for inlet manifold only
C—Position of raised portion, when fitted

1. When fitting the late type joint washers proceed as follows:

   (a) Tighten the inlet manifold to exhaust manifold fixings to 17 lb ft (2,3 mkg) torque load then slacken off slightly.

   (b) With the raised rings on the inlet manifold joint washer toward the cylinder head, fit the joint washer and manifolds complete and tighten the fixings.

   (c) Finally, retighten the inlet manifold to exhaust manifold fixings to 17 lb ft (2,3 mkg) torque load.

*Operations marked with an asterisk (*) can be carried out with the engine installed in the vehicle*

## Operation A1-7—*continued*

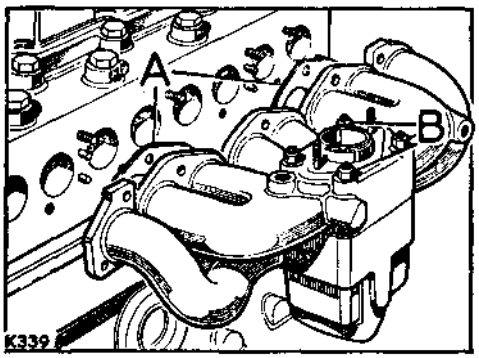


**Fig. A1-33. Refitting inlet and exhaust manifolds**

A—Joint washers, late type shown. Position washer with raised rings towards cylinder head

B—Fixings, inlet manifold to exhaust manifold

2. Refit the front exhaust pipe, see Fig. A1-30.
3. Refit the carburetter and bonnet panel, Operations A1-6 and A1-1 respectively.

## Inlet and exhaust manifold, overhaul—Operation A1-8

*(For removing and refitting instructions, Operation A1-7 refers)*

Workshop hand tools:
Spanner sizes: ½ in. AF ring, 2 BA open ended
Screwdriver (medium)

### To dismantle

1. Separate the exhaust manifold assembly from the inlet manifold.

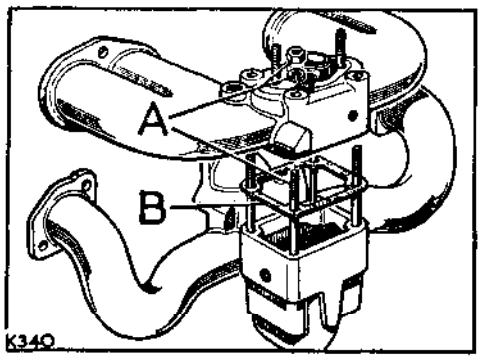


**Fig. A1-34. Separating the manifolds**

A—Fixings, exhaust manifold to inlet manifold
B—Joint washer

2. Clean the component parts, using clean fuel.
3. Examine joint faces for damage, examine the exhaust manifold for cracks.

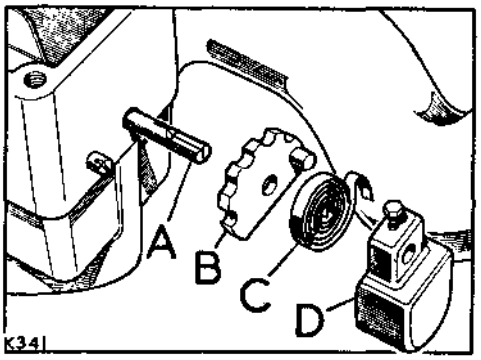


**Fig. A1-35. 'Hot spot' components**

A—Butterfly spindle, slotted to retain spring inner end
B—Adjusting plate and pin for spring outer end location
C—Bi-metal spring
D—Counterbalance weight and fixing

4. Examine the bi-metal spring attached to the exhaust manifold butterfly spindle. If the spring is sound, no further dismantling is necessary. If spring replacement is required, slacken the counterbalance weight fixing and remove the 'hot spot' components from the butterfly spindle.

### To assemble

1. If removed, refit the 'hot spot' components to the exhaust manifold and adjust as follows:
   (a) Remove the retaining set screw.
   (b) Turn the adjusting plate until the counterbalance weight is just supported by the spring. Do not over-tension the spring otherwise the 'hot spot' flap in the exhaust manifold will not close during engine running.
   (c) Replace the retaining screw, selecting the appropriate serration in the adjusting plate, and tighten.

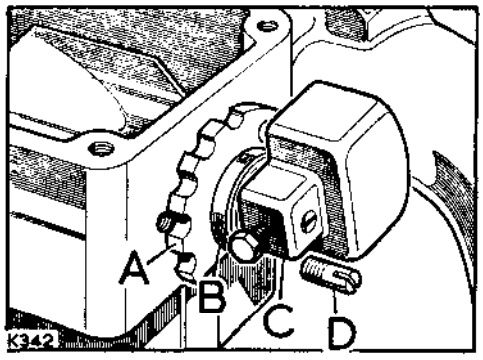


**Fig. A1-36. Adjusting the 'hot spot' components**

A—Serrated adjusting plate
B—Bi-metal spring
C—Counterbalance weight
D—Retaining set screw

2. Fit the inlet manifold to the exhaust manifold, referring to Fig. A1-34. Do not fully tighten the inlet manifold to exhaust manifold fixings until the assembly is refitted to engine, as described in Operation A1-7.

## *Starter motor, remove and refit—Operation A1-9

*(For overhaul instructions, Section N refers)*

Workshop hand tools:
Spanner sizes: $\frac{7}{16}$ in. AF open end, $\frac{5}{16}$ in. BSF open end
Screwdriver (medium), Pliers

### To remove

1. Remove the bonnet panel. Operation A1-1.
2. Disconnect the battery leads.
3. Remove the exhaust heat shield, if fitted.

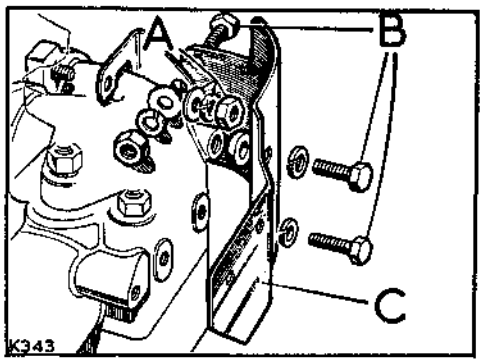


**Fig. A1-37. Heat shield and fixings**

A—At cylinder block
B—At exhaust manifold
C—Heat shield

4. Disconnect electrical lead at starter terminal, remove fixings at engine and withdraw starter. If necessary, disconnect the front exhaust pipe at the manifold to facilitate starter withdrawal.

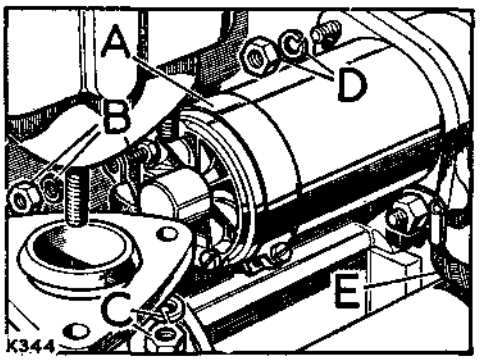


**Fig. A1-38. Starter motor and front exhaust fixings**

A—Starter motor
B—Electrical lead and fixing
C—Front exhaust pipe fixings
D—Fixings at engine
E—Earth strap, if fitted

### To refit

1. Refit the starter motor and the exhaust heat shield, if fitted, referring to Fig. A1-38 and A1-37 respectively for details of connections and fixings.
2. Connect the battery leads.
3. Refit the bonnet panel. Operation A1-1.

## *Dynamo, remove and refit—Operation A1-10

*(For overhaul instructions, Section N refers)*

Workshop hand tools:
Spanner sizes: ½ in. AF open end, ½ in. AF ring
Screwdriver (medium), Pliers

### To remove

1. Remove bonnet panel. Operation A1-1.
2. Disconnect battery leads.
3. Remove dynamo electrical leads, slacken dynamo fixings and withdraw fan belt from dynamo pulley.
4. Remove fixings and withdraw dynamo.

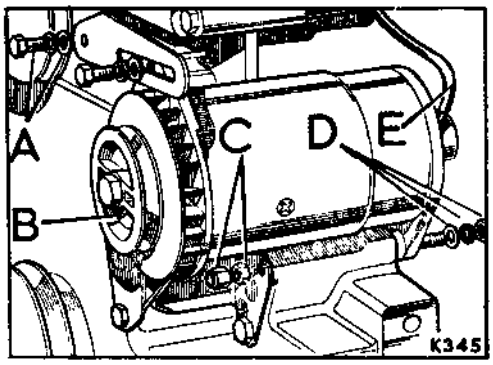


**Fig. A1-39. View of dynamo and fixings**

A—At adjusting bracket
B—Fan belt pulley
C—At front support
D—At rear support
E—Electrical leads at dynamo terminals

### To refit

1. Refit the dynamo; reset the fan belt tension and fully tighten the dynamo fixings. The tension is correct when the fan belt can be depressed $\frac{5}{16}$ in. to $\frac{7}{16}$ in. (8 mm to 11 mm) by thumb pressure applied midway between the fan pulley and crankshaft pulley.
2. Refit the battery leads.
3. Refit the bonnet panel. Operation A1-1.

## *Water pump, remove and refit—Operation A1-11

*(For overhaul information, Section K refers)*

Workshop hand tools:
Spanner sizes: $\frac{7}{16}$ in. AF open end, $\frac{1}{2}$ in. AF ring
Screwdriver (medium), Pliers

**To remove**

1. Remove bonnet panel. Operation A1-1.
2. Remove radiator filler cap and drain coolant.

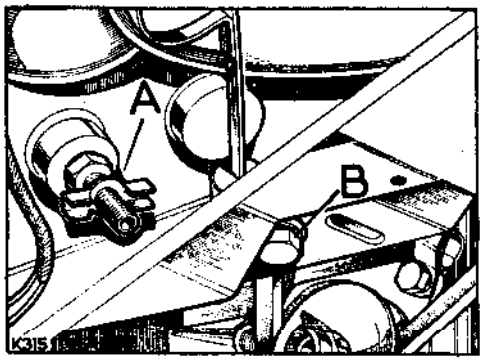


**Fig. A1-40. Coolant drain taps location**

A—Cylinder block drain
B—Radiator drain

3. Remove the shroud from the radiator fan cowl.

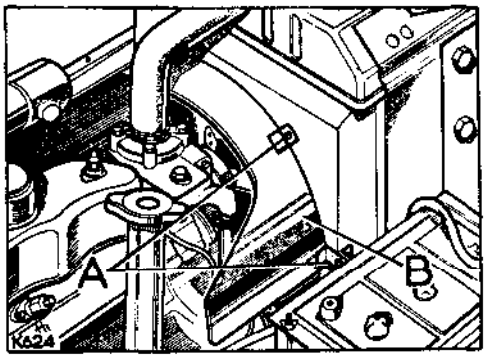


**Fig. A1-41. Fan cowl shroud fixings**

A—Fixings at fan cowl
B—Fan cowl shroud

4. Slacken dynamo fixings and remove fan belt; remove dynamo adjusting link to gain access to water pump fixings.

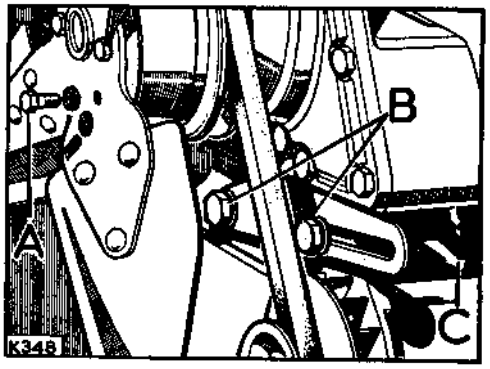


**Fig. A1-42. Adjusting link and fan fixings**

A—Fan blades fixings
B—Adjusting link fixings
C—Move dynamo clear of water pump fixings

5. Remove fan blades and fan pulley.

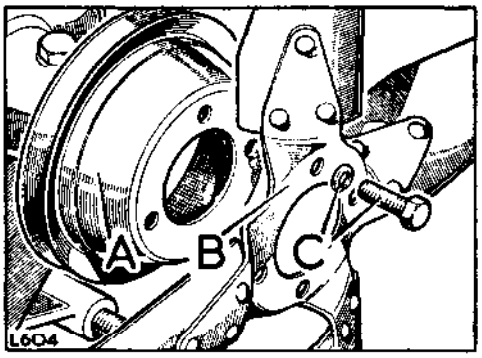


**Fig. A1-43. Fixings for fan and pulley**

A—Fan pulley, withdraw with fan blades
B—Fan blades, remove from vehicle or lower to rest on fan cowl
C—Fan blades fixings

6. Detach the radiator bottom hose and the by-pass hose from the water pump.

*Operations marked with an asterisk (*) can be carried out with the engine installed in the vehicle*

## Operation A1-11—*continued*

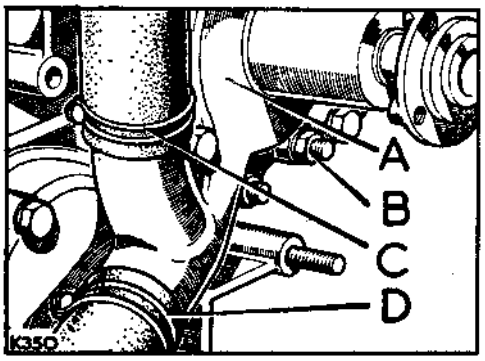


**Fig. A1-44. Water pump and hose fixings**

A—Water pump
B—Water pump fixings
C—At by-pass hose
D—At radiator bottom hose

7. Remove fixings and withdraw water pump and gasket.

### To refit

1. Smear general purpose grease on both sides of the joint washer and position on front cover joint face.
2. Refit the water pump and connect the coolant hoses, referring to Fig. A1-44. The water pump $\frac{5}{16}$ in. UNF fixing bolts are of differing lengths and care should be taken to locate them correctly.
3. Refit the fan pulley, fan blades and dynamo, referring to Figs. A1-43 and A1-42 as necessary.
4. Reset the fan belt tension and fully tighten the dynamo fixings. The tension is correct when the fan belt can be depressed $\frac{5}{16}$ in. to $\frac{7}{16}$ in. (8 mm to 11 mm) by thumb pressure applied midway between the fan pulley and crankshaft pulley.
5. Refit the fan cowl shroud, referring to Fig. A1-41.
6. Refill the engine coolant system. Allow a full flow of coolant through the drain taps before closing them.

**COOLANT SYSTEM**
**Bonneted Control Model, 2½ Litre Petrol**

| | Capacity | Imperial Unit | US Unit | Litres | Antifreeze | Frost Precaution |
|---|---|---|---|---|---|---|
| 88 | 18 pints | 18 pints | 21½ pints | 10,25 | 33⅓% | —25°F<br>—32°C |
| 109 | 18 pints | 18 pints | 21½ pints | 10,25 | 33⅓% | —25°F<br>—32°C |

7. Refit the bonnet panel, Operation A1-1.

## *Thermostat and housing, remove and refit—Operation A1-12

*(For thermostat overhaul information, Section K refers)*

Workshop hand tools:
Spanner sizes: $\frac{7}{16}$ in. AF ring
Screwdriver (medium)

### To remove

1. Lift and prop bonnet.
2. Remove radiator cap and partially drain coolant.

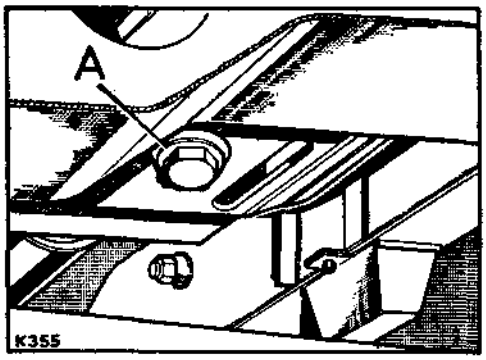


**Fig. A1-45. Radiator drain location**

A—Radiator drain plug

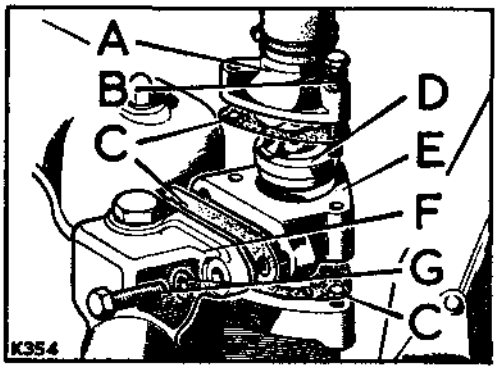


**Fig. A1-46. Thermostat housing fixings**

A—Outlet pipe
B—Fixings
C—Joint washer
D—Thermostat
E—Thermostat housing
F—By-pass pipe
G—Fixings

3. Disconnect top hose/s and remove by-pass pipe fixings.
4. Remove thermostat housing fixings and withdraw housing and outlet pipe complete. Remove joint washer.
5. Separate housing from outlet pipe and withdraw thermostat and joint washer.

### To refit

1. Smear general purpose grease on both sides of the joint washers.
2. Fit the thermostat into the housing and position on the engine.
3. Assemble the outlet pipe and joint washer to the thermostat housing. Fit all fixings and connect the coolant hoses, referring to Fig. A1-46.
4. Refill the coolant system as necessary, allowing a full flow through the radiator drain tap before closing it.

**COOLANT SYSTEM**
**Bonnated Control Model, 2¼ Litre Petrol**

| | Capacity | Imperial Unit | US Unit | Litres | Antifreeze | Frost Precaution |
|---|---|---|---|---|---|---|
| 88 | 18 pints | 18 pints | 21½ pints | 10,25 | 33⅓% | —25°F<br>—32°C |
| 109 | 18 pints | 18 pints | 21½ pints | 10,25 | 33⅓% | —25°F<br>—32°C |

5. Refit the radiator cap and close the bonnet.

*Operations marked with an asterisk (*) can be carried out with the engine installed in the vehicle*

## *Fuel pump, remove and refit—Operation A1-13

*(For overhaul information, Section L refers)*

Workshop hand tools:
Spanner sizes: $\frac{11}{16}$ in. AF open end, $\frac{1}{2}$ in. AF open end, $\frac{1}{2}$ in. AF socket
Screwdriver (medium), Pliers

### To remove

1. Remove bonnet panel. Operation A1-1.
2. Remove air cleaner. Operation A1-2.
3. Disconnect fuel pipes at fuel pump.
4. Remove the fixings and withdraw the pump and rear cover complete.

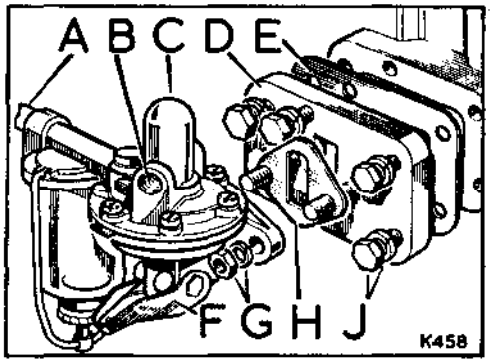


**Fig. A1-47. Fuel pump location and fixings**

A—Fuel inlet pipe
B—Fuel outlet pipe
C—Fuel pump
D—Side cover
E—Joint washer for side cover
F—Hand prime lever
G—Pump fixings
H—Joint washer
J—Fixings for side cover

5. If required, remove the fuel pump from the rear cover.

### To refit

1. Fit the fuel pump to the cover.
2. Smear general purpose grease on both sides of the joint washer.
3. Refit the fuel pump and joint washer and connect the fuel pipes.
4. Prime the fuel pump by operating the hand prime lever until no resistance is felt.
5. Refit air cleaner. Operation A1-2.
6. Refit bonnet panel. Operation A1-1.

## *Engine side covers, remove and refit—Operation A1-14

Workshop hand tools:
Spanner sizes: 11/16 in. AF, ½ in. AF open ended, ½ in. AF socket
Screwdriver (medium), Pliers

### To remove

1. Remove bonnet panel. Operation A1-1.
2. Remove air cleaner. Operation A1-2.

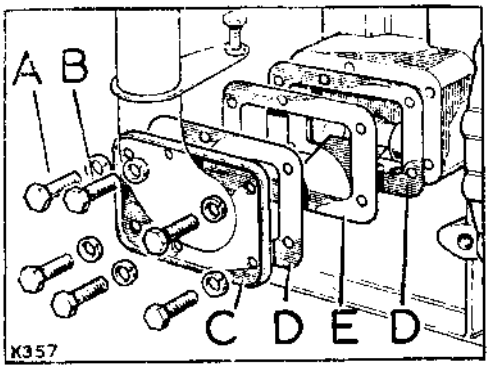


**Fig. A1-48. View of front side cover**

A—Fixings for side cover
B—Fit this bolt first when refitting
C—Filler pipe and side cover
D—Joint washers
E—Baffle

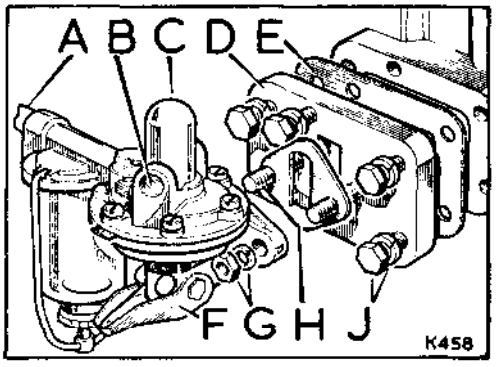


**Fig. A1-49. View of rear side cover**

A—Fuel inlet pipe
B—Fuel outlet pipe
C—Fuel pump
D—Side cover
E—Joint washer for side cover
F—Hand prime lever
G—Pump fixings
H—Joint washer
J—Fixings for side cover

3. Remove the fixings at the front side cover and withdraw the side cover and oil filler pipe complete with baffle and joint washers.
4. Disconnect the fuel inlet and outlet pipes at the fuel pump, remove the fixings at the rear side cover and withdraw the cover and fuel pump complete.

### To refit

1. Refit the front side cover. When fitting the fixings, first engage the tapping nearest to the oil filler pipe, otherwise subsequent access for this fixing will be restricted.
2. Refit the rear side cover and fuel pump and connect the fuel pipes. Prime the fuel system by operating the hand prime lever until no resistance is felt. See Fig. A1-49 for location of hand prime lever.
3. Refit the air cleaner. Operation A1-2.
4. Refit the bonnet panel. Operation A1-1.

*Operations marked with an asterisk (*) can be carried out with the engine installed in the vehicle*

## *Oil filter, external, replace element—Operation A1-15

Workshop hand tools:
Spanner sizes: ⅝ in. AF socket

### Element, to remove

1. Position a suitable waste oil receptacle under the filter.
2. Remove the centre fixing from the filter.
3. Remove filter body and allow oil to drain.
4. Remove sealing ring from filter cap.
5. Remove filter element.

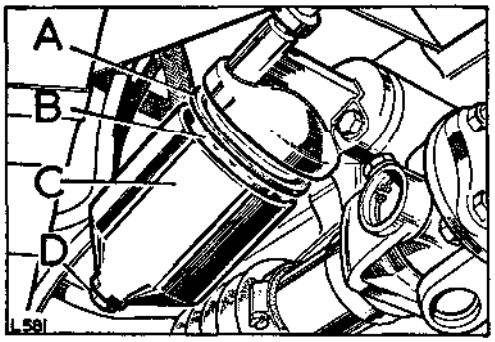


**Fig. A1-50. View of oil filter**

A—Sealing ring
B—Element
C—Filter body
D—Filter centre fixing

6. Wash metal components, using clean fuel.

### Element, to refit

1. Fit the new element to the filter body and refit body to cap. Ensure filter body is fully home on to sealing ring in filter cap. See Fig. A1-50.
2. Replenish the engine lubricating oil.
3. Check the sump oil level after a short engine run and top-up as necessary.

**ENGINE LUBRICANT CAPACITY**
**Bonneted Control Model, 2¼ Litre Petrol**

| | | Capacity | Imperial Unit | US Unit | Litres |
|---|---|---|---|---|---|
| 88 | Engine .... .... | 11 pints | 11 pints | 13 pints | 6,0 |
| | Filter .... .... | 1½ pints | 1½ pints | 1.8 pints | 0,85 |
| | Engine and Filter .... | 12½ pints | 12½ pints | 14.8 pints | 6,85 |
| 109 | Engine .... .... | 11 pints | 11 pints | 13 pints | 6,0 |
| | Filter .... .... | 1½ pints | 1½ pints | 1.8 pints | 0,85 |
| | Engine and Filter .... | 12½ pints | 12½ pints | 14.8 pints | 6,85 |

## *Oil filter, external, remove, overhaul and refit—Operation A1-16

Workshop hand tools:
Spanner sizes: ⅝ in. AF, 1⅛ in. AF socket, $\frac{1}{16}$ in. BSF open end

### To remove

1. Lift and prop bonnet.
2. Detach oil pressure switch lead.
3. Remove the fixings and withdraw the oil filter and joint washer.

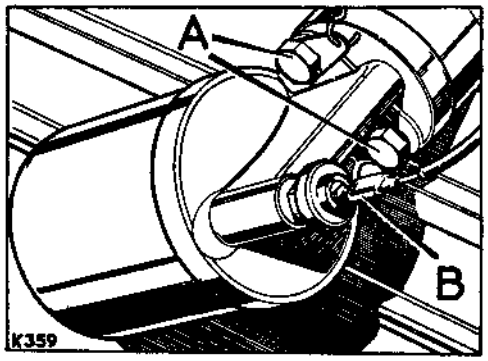


**Fig. A1-51. Oil filter fixings**

A—Fixings, filter to engine, RH side
B—Oil pressure switch lead

### To overhaul

1. Drain off oil.
2. Remove the centre fixing at the filter base and dismantle the filter assembly.
3. Wash the components in clean fuel and inspect for general condition.
4. Replace the sealing washer and filter element.
5. Refit the oil pressure switch.
6. Refit the sealing washer to the filter cover and place the filter element in the filter body.

### To refit

1. Smear general purpose grease on to both sides of the joint washer.
2. Refit the filter body to the top cover ensuring that the body seats correctly on to the sealing washer.
3. Refit the assembled filter to the engine, referring to Fig. A1-51.
4. Connect the oil pressure switch lead and close the bonnet.
5. Check the sump oil level after a short engine run and top-up as necessary to the 'high' mark on the oil level dipstick.

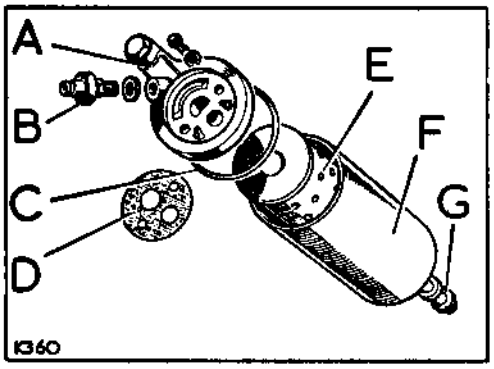


**Fig. A1-52. Exploded view of oil filter**

A—Top cover
B—Oil pressure switch
C—Sealing washer
D—Joint washer
E—Element
F—Container
G—Centre fixing

**ENGINE LUBRICANT CAPACITY**

**Bonneted Control Model, 2¼ Litre Petrol**

| | | Capacity | Imperial Unit | US Unit | Litres |
|---|---|---|---|---|---|
| 88 | Engine .... .... | 11 pints | 11 pints | 13 pints | 6,0 |
| | Filter .... .... | 1½ pints | 1½ pints | 1.8 pints | 0,85 |
| | Engine and Filter .... | 12½ pints | 12½ pints | 14.8 pints | 6,85 |
| 109 | Engine .... .... | 11 pints | 11 pints | 13 pints | 6,0 |
| | Filter .... .... | 1½ pints | 1½ pints | 1.8 pints | 0,85 |
| | Engine and Filter .... | 12½ pints | 12½ pints | 14.8 pints | 6,85 |

*Operations marked with an asterisk (*) can be carried out with the engine installed in the vehicle*

## *Ignition timing procedure—Operation A1-17

Workshop hand tools:
Spanner sizes: $\frac{7}{16}$ in. AF open end
Screwdriver (medium), Pliers

Special tools:
Suitable test lamp—12 volt—and leads

**Note:** Timing pointer position differs between early and late engines. Fig. Nos. A1-53 and A1-54 refer.

**Procedure**

1. Remove bonnet panel. Operation A1-1.
2. **Engines with timing pointer on flywheel housing**—rotate the crankshaft in direction of rotation until the appropriate timing mark on the flywheel is aligned with the timing pointer and the distributor rotor is at No. 1 cylinder firing position.

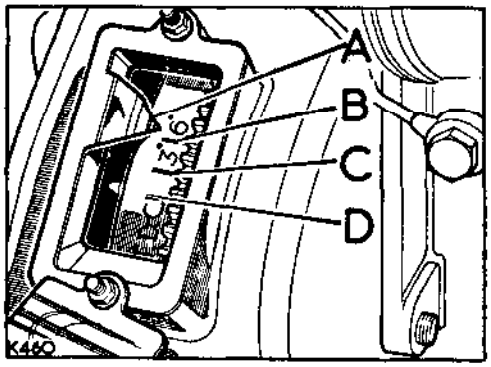


**Fig. A1-53. Timing pointer on flywheel housing**

A—Timing pointer
B—6° mark, align when using 90–96 octane fuel
C—3° mark, align when using 80–85 octane fuel
D—TDC mark, align when using 74–76 octane fuel

3. **Engines with timing pointer on front cover bracket**—rotate the crankshaft in direction of rotation until the timing mark on the crankshaft pulley is aligned with the appropriate tongue on the timing pointer and the distributor rotor is at No. 1 cylinder firing position.
4. Slacken the pinch bolt in base of distributor body and rotate the distributor in opposite direction to arrow on rotor arm until the contact breaker points are just opening with the cam follower on the leading side of the cam. Re-tighten the pinch bolt.

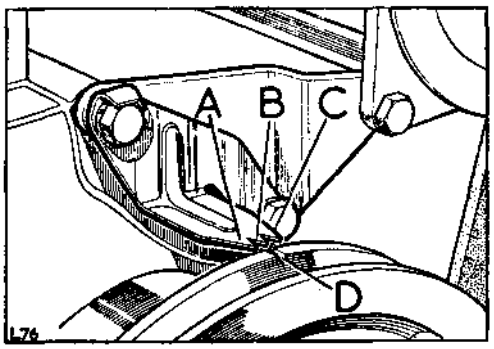


**Fig. A1-54. Timing pointer on front cover**

A—6° tongue, align when using 90-96 octane fuel
B—3° tongue, align when using 80-85 octane fuel
C—TDC tongue, align when using 74–76 octane fuel
D—Mark on crankshaft pulley, align with appropriate tongue

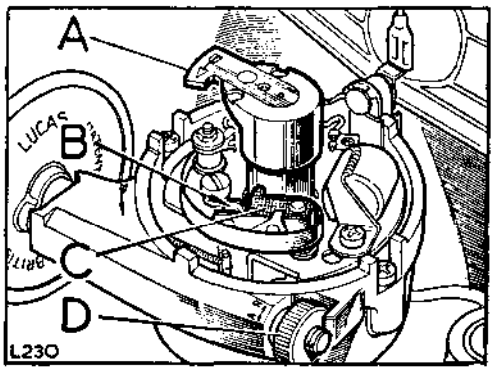


**Fig. A1-55. View of distributor**

A—Rotor arm
B—Contact breaker points
C—Cam follower
D—Vernier screw adjuster

*Operations marked with an asterisk (*) can be carried out with the engine installed in the vehicle*

## Operation A1-17—*continued*

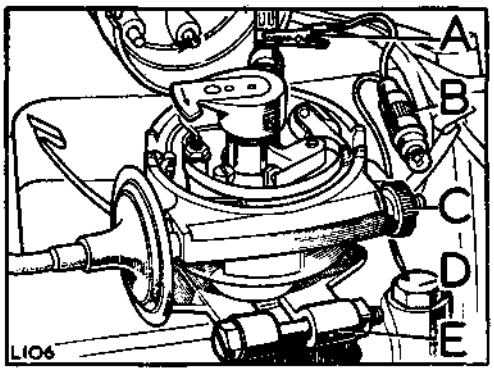


**Fig. A1-56. Test lamp in position**

A—LT terminal at distributor
B—Test lamp
C—Vernier screw adjuster
D—Suitable earth
E—Pinch bolt

5. Connect one lead of a 12 volt test lamp to the distributor LT terminal and the other one to a good earth on engine. Switch ignition 'on' and turn the crankshaft two revolutions in direction of rotation. The bulb should light as the timing pointer comes into alignment with the appropriate mark. See paragraphs 2 and 3.

6. Adjust as required by slackening the pinch bolt and turning the distributor bodily, or for fine adjustment, by means of the vernier screw.

7. When satisfactory, remove the test lamp and leads and refit the distributor cap.

8. Refit the inspection cover to the flywheel housing, where applicable.

9. Refit the bonnet panel. Operation A1-1.

## *Distributor and driving gear, remove and refit—Operation A1-18

*(For overhaul instructions, Section N refers)*

Workshop hand tools:
Spanner sizes: ⅜ in. AF, $\frac{7}{16}$ in. AF open end, ⅝ in. AF socket
Pliers (snipe nosed), Screwdriver (small), Screwdriver (medium)

### To remove

1. Remove bonnet panel. Operation A1-1.
2. Remove air cleaner. Operation A1-2.
3. Remove external oil filter. Operation A1-16.
4. Disconnect battery.
5. Disconnect distributor leads and vacuum pipe.

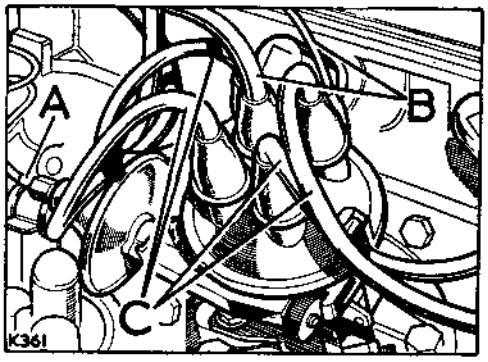


**Fig. A1-57. Distributor connections**

A—Vacuum pipe
B—High tension and low tension leads, disconnect at distributor
C—Ignition leads, disconnect at sparking plugs

6. Disconnect vacuum pipe; remove fixings and withdraw distributor and adaptor from engine.
7. Lift the short drive shaft coupling from the vertical drive gear, remove the locating grub screw and withdraw the vertical drive gear assembly using suitable pliers.

### To refit

1. **Engines with timing pointer on flywheel housing.** Rotate the crankshaft until the appropriate timing mark on the flywheel is aligned with the timing pointer and both valves on No. 1 cylinder are fully closed. See Fig. A1-60.

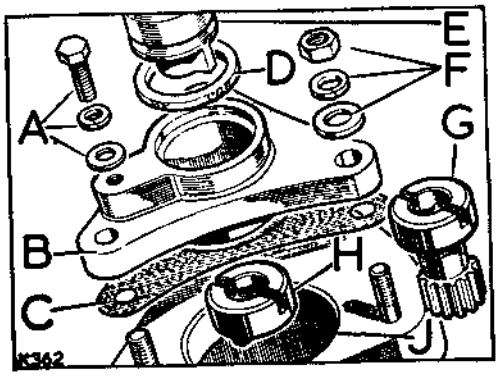


**Fig. A1-58. Distributor removal**

A—Distributor fixings
B—Distributor adaptor
C—Joint washer
D—Cork washer
E—Distributor
F—Adaptor fixings
G—Top drive shaft, early engines
H—Drive shaft coupling, later engines
J—Vertical drive gear housing

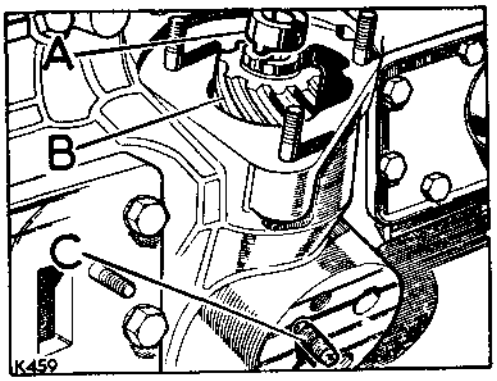


**Fig. A1-59. Distributor drive gear details**

A—Drive shaft coupling
B—Vertical drive gear assembly
C—Locating grub screw at tapping in oil filter location face

*Operations marked with an asterisk (*) can be carried out with the engine installed in the vehicle*

## Operation A1-18—*continued*

2. **Engines with timing pointer on front cover bracket.** Rotate the crankshaft until the timing mark on the crankshaft pulley is aligned with the appropriate tongue on the timing pointer and both valves on No. 1 cylinder are fully closed.

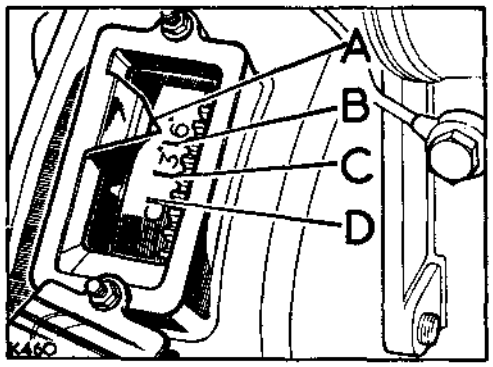


**Fig. A1-60. Timing pointer on flywheel housing**

A—Timing pointer
B—6° mark, align when using 90–96 octane fuel
C—3° mark, align when using 80–85 octane fuel
D—TDC mark, align when using 74–76 octane fuel

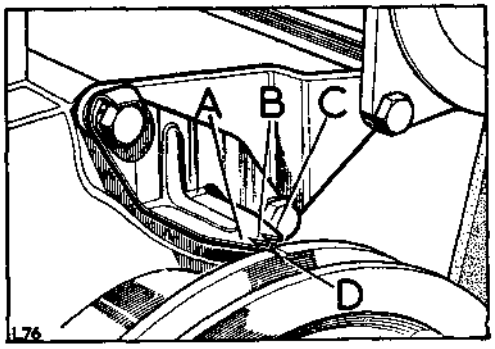


**Fig. A1-61. Timing pointer on front cover**

A—6° tongue, align when using 90–96 octane fuel
B—3° tongue, align when using 80–85 octane fuel
C—TDC tongue, align when using 74–76 octane fuel
D—Mark on crankshaft pulley, align with appropriate tongue

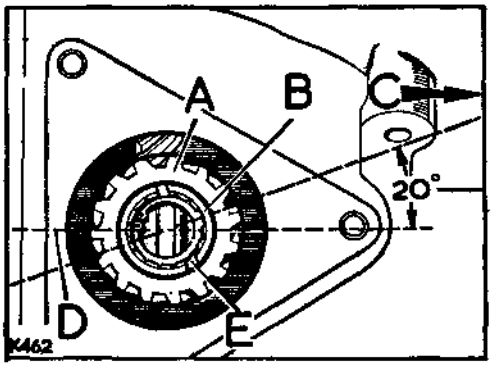


**Fig. A1-62. Fitting vertical drive gear**

A—Vertical drive gear
B—Master spline for locating drive shaft, early engines
C—To front of engine
D—Line parallel with engine centre line
E—Offset slot for use with later type drive shaft coupling

**Continue for all engines:**

3. Insert the vertical drive shaft assembly so that when fully engaged, the master spline is pointing toward No. 1 cylinder. See Fig. A1-62.
4. Locate the small hole in the vertical drive gear bush through the oil filter location face, and fit the grub screw. Fig. A1-59 refers.

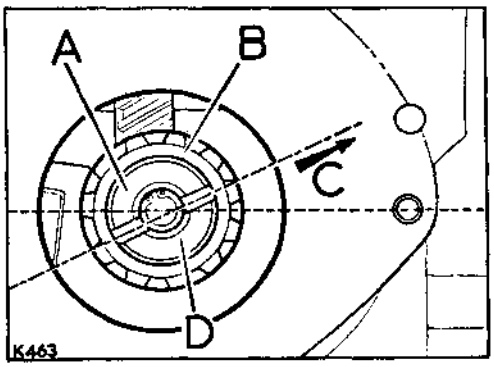


**Fig. A1-63. Fitting drive coupling**

A—Top drive coupling
B—Vertical drive gear
C—No. 1 cylinder
D—Narrow segment of coupling

## Operation A1-18—*continued*

5. Fit the short distributor drive shaft coupling to the vertical drive gear with the narrow segment toward the RH side of engine and the slot toward No. 1. cylinder.
6. Fit the distributor adaptor plate and joint washer and locate the cork washer in the recess.
7. Adjust the distributor contact breaker gap to .014 in. to .016 in. (0,35 mm to 0,40 mm) and set the octane selector so that the fourth line from LH side on calibrated slide is against the face of the distributor body casing.

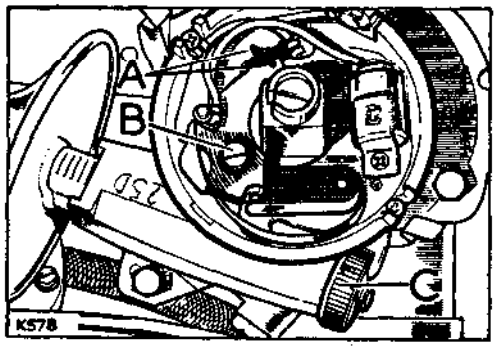


**Fig. A1-64. Distributor settings**

A—Adjust here to set gap
B—Locking screw for gap setting
C—Adjuster screw

8. Offer up the distributor to the engine with the rotor arm in the No. 1 cylinder firing position. With the vacuum unit facing rearward, the narrow segment of the distributor shaft should be toward the RH side of the vehicle and the dog pointing toward No. 1 cylinder. The drive shaft will then engage correctly with the drive shaft coupling at engine. See Fig. A1-63.
9. Fit the distributor to the mounting adaptor plate Fig. A1-58 refers.
10. Carry out the ignition timing procedure detailed in Operation A1-17.
11. Refit the distributor cap.
12. Refit the vacuum pipe and distributor leads, referring to Fig. A1-57.
13. Connect the battery leads.
14. Refit the external oil filter. Operation A1-16.
15. Refit the air cleaner and bonnet panel, Operations A1-2 and A1-1 respectively.
16. Replenish the engine lubricating oil as necessary after a short engine run.

**ENGINE LUBRICANT CAPACITY**
**Bonneted Control Model, 2¼ Litre Petrol**

| | | Capacity | Imperial Unit | US Unit | Litres |
|---|---|---|---|---|---|
| 88 | Engine .... .... | 11 pints | 11 pints | 13 pints | 6,0 |
| | Filter .... .... | 1½ pints | 1½ pints | 1.8 pints | 0,85 |
| | Engine and Filter .... | 12½ pints | 12½ pints | 14.8 pints | 6,85 |
| 109 | Engine .... .... | 11 pints | 11 pints | 13 pints | 6,0 |
| | Filter .... .... | 1½ pints | 1½ pints | 1.8 pints | 0,85 |
| | Engine and Filter .... | 12½ pints | 12½ pints | 14.8 pints | 6,85 |

## *Tappet adjustment—Operation A1-19

Workshop hand tools:
Spanner sizes: ¼ in. AF ring
Screwdriver (medium), Feeler gauges, Pliers

**Tappets, to adjust**

1. Remove the bonnet panel. Operation A1-1.
2. Remove the air cleaner. Operation A1-2.
3. Remove the engine top cover.

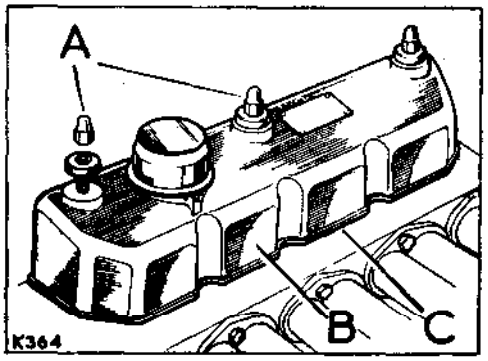


**Fig. A1-65. Engine top cover**

A—Fixings for top cover
B—Top cover
C—Joint washer

4. Set the tappet clearances to .010 in. (0,25 mm) for all valves.

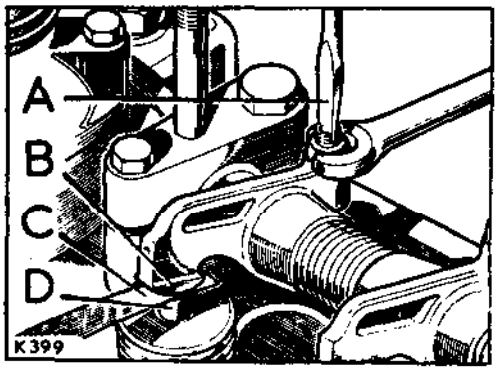


**Fig. A1-66. Setting tappet clearances**

A—Screwdriver
B—Rocker pad
C—Feeler gauge
D—Valve stem

The tappet setting is most easily carried out in the following sequence, No. 1 tappet being at the front of the engine:

Set No. 1 tappet clearance with No. 8 valve fully open.
Set No. 3 tappet clearance with No. 6 valve fully open.
Set No. 5 tappet clearance with No. 4 valve fully open.
Set No. 2 tappet clearance with No. 7 valve fully open.
Set No. 8 tappet clearance with No. 1 valve fully open.
Set No. 6 tappet clearance with No. 3 valve fully open.
Set No. 4 tappet clearance with No. 5 valve fully open.
Set No. 7 tappet clearance with No. 2 valve fully open.

5. Recheck tappet clearances with locknuts fully tightened.
6. Refit the engine top cover, referring to Fig. A1-65.
7. Refit the air cleaner and bonnet panel, Operations A1-2 and A1-1 respectively.

*Operations marked with an asterisk (*) can be carried out with the engine installed in the vehicle*

## *Valve gear, rocker shaft and push rods, remove and refit—Operation A1-20

*(For overhaul instructions, Operation A1-21 refers)*

Workshop hand tools:
Spanner sizes: ½ in. AF ring, ¾ in. AF socket
Screwdriver (medium), Pliers

Special tools:
Torque wrench

### To remove

1. Remove bonnet panel. Operation A1-1.
2. Remove air cleaner. Operation A1-2.
3. Remove engine top cover.

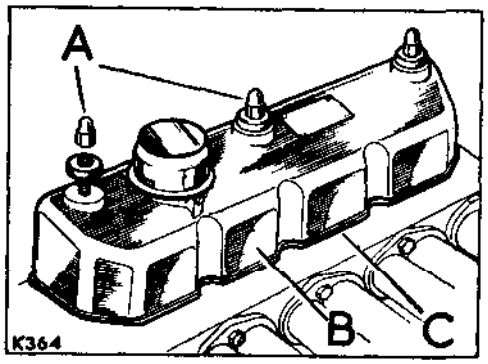


**Fig. A1-67. Engine top cover**

A—Fixings B—Top cover
C—Joint washer

4. Slacken locknuts and turn tappet adjusting screws to disengage from push rods.
5. Remove fixings from rocker shaft support brackets. Do not remove shaft assembly at this stage.

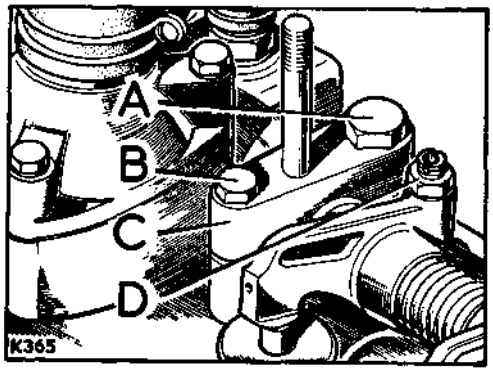


**Fig. A1-68. Rocker shaft fixings**

A—Fixings, brackets to engine
B—Fixings, shaft to brackets
C—Rocker brackets
D—Tappet locknuts and adjusting screws

6. Withdraw the rocker shaft assembly complete, using the engine top cover secured inverted to the rocker bracket studs to retain the assembly.
7. Withdraw the tappet push rods and retain them in numbered sequence related to the tappet served.

### To refit

1. Fit the tappet push rods to their original bores. Ensure the push rods are bottomed in the spherical seat in the tappet rockers.
2. Clean the rocker shaft fixing bolt threads of deposits which could become trapped between the cylinder head and gasket.
3. Fit the rocker shaft assembly, located by spigots.

   Tighten the fixings as follows:

   ½ in. UNF bolts to 65 lb ft (8,9 mkg) torque load.

   $\frac{5}{16}$ in. UNF bolts to 18 lb ft (2,4 mkg) torque load.
4. Check tighten all ½ in. UNF cylinder head fixings, in the order shown, to a torque load of 65 lb ft (8,9 mkg).

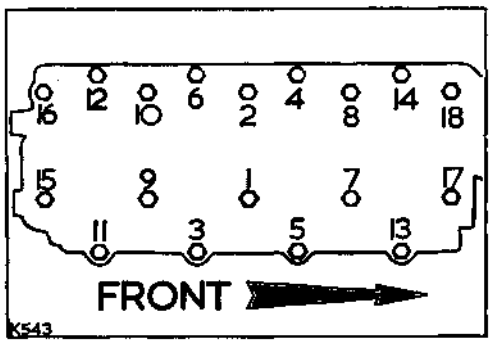


**Fig. A1-69. Order of tightening cylinder head fixings**

*Operations marked with an asterisk (*) can be carried out with the engine installed in the vehicle*

## Operation A1-20—*continued*

5. Fit the tappet screw locknuts and set the tappet clearances to .010 in. (0,25 mm) (with the locknuts tightened) in the following sequence:

   Set No. 1 tappet with No. 8 valve fully open.
   Set No. 3 tappet with No. 6 valve fully open.
   Set No. 5 tappet with No. 4 valve fully open.
   Set No. 2 tappet with No. 7 valve fully open.
   Set No. 8 tappet with No. 1 valve fully open.
   Set No. 6 tappet with No. 3 valve fully open.
   Set No. 4 tappet with No. 5 valve fully open.
   Set No. 7 tappet with No. 2 valve fully open.

6. Refit the engine top cover.

7. Refit the air cleaner and bonnet panel. Operations A1-2 and A1-1 respectively.

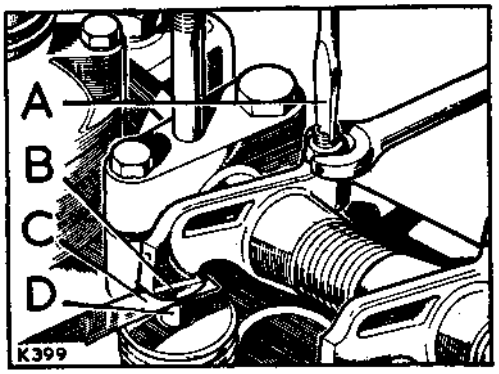


**Fig. A1-70. Adjusting tappets**

A—Screwdriver
B—Rocker pad
C—Feeler gauge
D—Valve stem

## *Valve gear and rocker shaft, overhaul—Operation A1-21

*(For removal and refitting instructions, Operation A1-20 refers)*

Workshop hand tools:
Spanner sizes: ½ in., $\frac{7}{16}$ in. AF ring
Screwdriver (medium)

### To dismantle

1. Remove the tappet adjusting screws from the valve rockers.
2. Withdraw the valve gear from the rocker shaft.

### Inspection

1. Rocker brackets. Ensure the oil feed holes are clear. Inspect the locating dowel spigots; the spigots must be undamaged to ensure a correct fit on the locating dowels in the cylinder head.

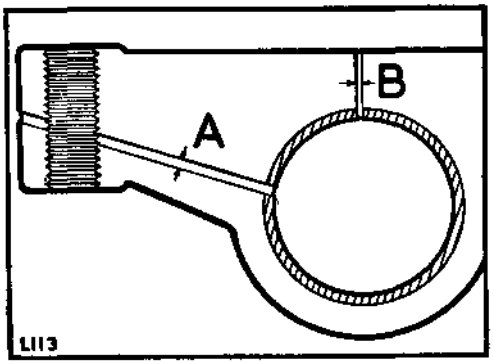


**Fig. A1-71. Sectioned view of valve rocker**

A—Oil feed drilling for tappet adjusting screw
B—Oil outlet drilling for splash lubrication

2. Valve rockers. Visually inspect the rocker bushes for wear. If necessary, press replacement bushes into the rockers and ream to 0.530 in. +0.001 in. (13,5 mm +0,02 mm).

**Note:** The oil holes in the rocker bushes are pre-drilled and must be aligned with the oil holes in the valve rocker when assembled.

Check that all oil passage drillings are clear.

3. Tappet adjusting screws and locknuts. Examine threads for damage. Check that the oil relief drilling is clear.
4. Inspect the rocker shaft for wear and scores; check that the oil feed holes are clear.
5. Examine the rocker shaft springs, spacing washers and the locating screw for soundness and general condition.

### To assemble

1. Fit an intermediate rocker bracket to the rocker shaft and engage the locating screw through the bracket and into the larger hole in the shaft.
2. Continue assembly, referring to Fig. A1-72 and note the assembled position for the spacing washers and the handed valve rockers.
3. Refit the tappet adjusting screws to the valve rockers. Fit the locknuts.
4. Refit to engine as detailed in Operation A1-20.

## Operation A1-21—*continued*

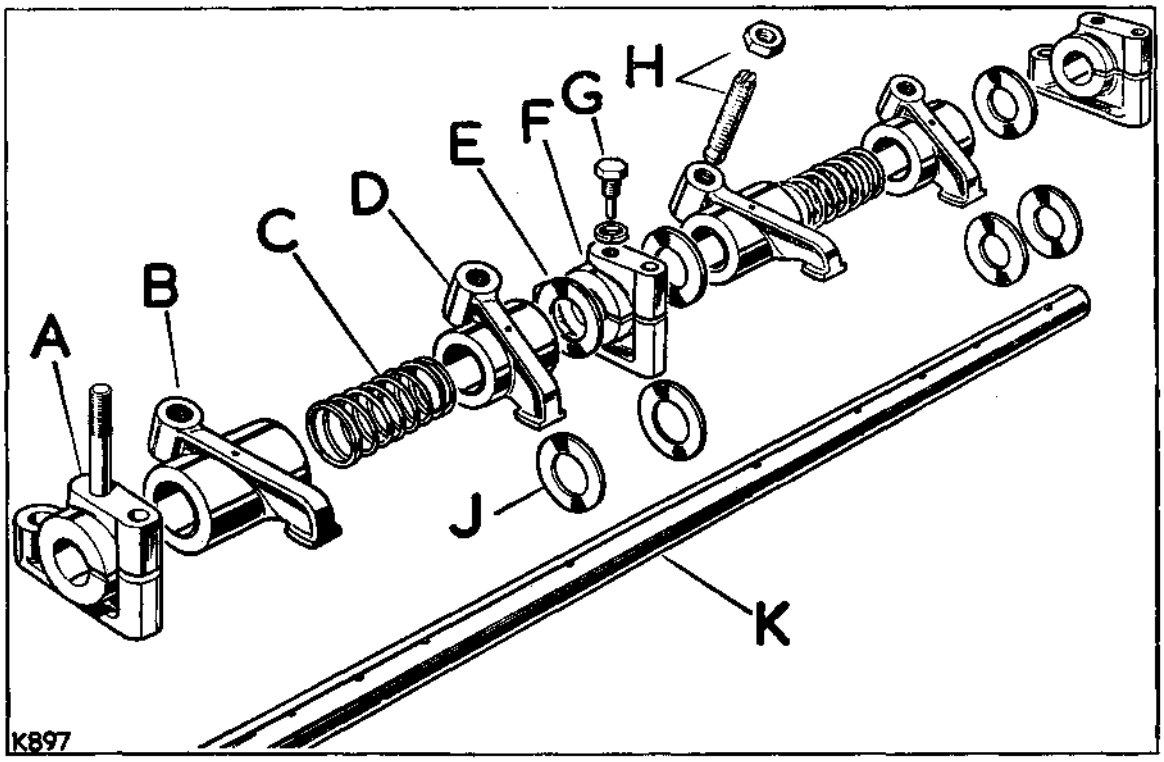


**Fig. A1-72. Valve gear and rocker shaft arrangement**

A—Rocker brackets. Front, centre and rear brackets carry studs for top cover fixings
B—Exhaust valve rockers (4 off)
C—Rocker shaft springs (4 off)
D—Inlet valve rockers (4 off)
E—Spacing washers (6 off)
F—Intermediate rocker bracket (2 off)
G—Locating screw for rocker shaft (2 off on early models)
H—Tappet screws adjacent to larger fixing holes in brackets
J—Spacing washers for diesel models. Not applicable for petrol models
K—Valve rocker shaft (2 off on early models)

## *Cylinder head, remove and refit—Operation A1-22

*(For overhaul instructions, Operation A1-23 refers)*

Workshop hand tools:
Spanner sizes: 7/16 in., ½ in., 9/16 in., 5/8 in., 11/16 in. AF open end
7/16 in., ½ in., 5/8 in., ¾ in. AF socket
5/16 in., 3/8 in. BSF open end
2 BA open end
14 mm box spanner
Screwdriver (medium), Pliers

Special tools:
Torque wrench

**To remove**

1. Remove bonnet panel. Operation A1-1.
2. Remove air cleaner. Operation A1-2.
3. Disconnect battery leads.
4. Remove engine top cover.

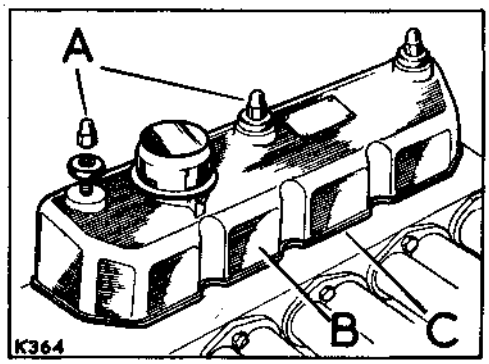


**Fig. A1-73. Engine top cover**
A—Top cover fixings
B—Top cover
C—Joint washer

5. Remove radiator filler cap and drain coolant.

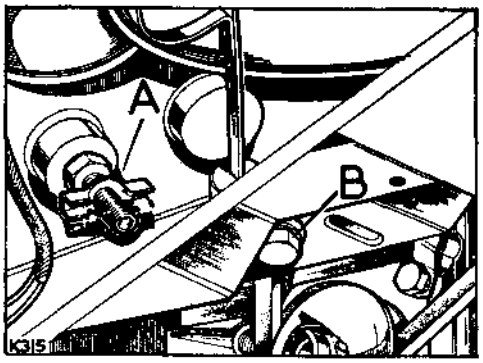


**Fig. A1-74. Coolant system drain points**
A—At engine block
B—At radiator block

6. Disconnect or remove the following components at the RH side of engine:
   (a) Disconnect the vacuum pipe at distributor.
   (b) Disconnect the distributor leads at the ignition coil and sparking plugs.
   (c) Remove the sparking plugs.
   (d) Remove the fan cowl shroud.
   (e) Disconnect oil gallery pipe.
   (f) Disconnect the coolant by-pass hose.

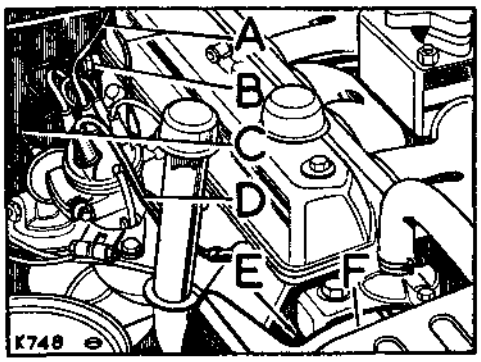


**Fig. A1-75. View of engine compartment, RH side**
A—Distributor leads to ignition coil
B—Oil gallery pipe
C—Distributor vacuum pipe
D—Distributor leads to sparking plugs
E—Coolant by-pass hose
F—Fan cowl shroud

7. Disconnect or remove the following components at the LH side of engine:
   (a) Disconnect coolant hose/s at thermostat housing.
   (b) Disconnect accelerator linkage at ball joint at carburetter.
   (c) Disconnect cold start inner and outer cables at carburetter.

*Operations marked with an asterisk (*) can be carried out with the engine installed in the vehicle*

## Operation A1-22—*continued*

(d) Disconnect the fuel inlet pipe at carburetter and release from clip on engine.

(e) Disconnect front exhaust pipe at exhaust manifold, removing heat shield if necessary to gain access.

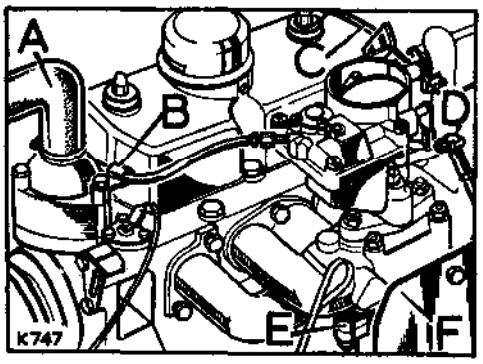


**Fig. A1-76. View of engine compartment, LH side**

A—Coolant hose/s at thermostat housing
B—Fuel inlet pipe clip
C—Cold start cables
D—Carburetter ball joint
E—Front exhaust pipe
F—Heat shield, if fitted

8. Remove the valve rocker shaft assembly and retain as an assembly.

9. Slacken evenly and remove the remaining fixings (Fig. A1-77 refers) and withdraw the cylinder head and joint gasket.

### To refit

1. To aid subsequent alignment, smear clean engine oil on the cylinder block and cylinder head gasket joint faces. Position the joint gasket on the block with the lettering 'PETROL' uppermost.

2. Position cylinder head on joint gasket. Clean all deposits from fixing bolt threads and engage all fixings except those also used to secure the rocker shaft assembly.

3. Place the push rods into position and ensure that they bottom correctly into the spherical seats in the tappet slides.

4. Fit the rocker shaft assembly and engage the fixings.

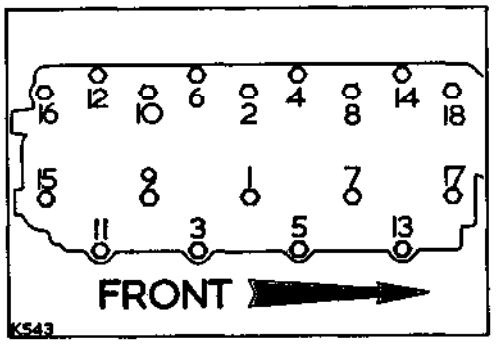


**Fig. A1-77. Order of tightening cylinder head fixings**

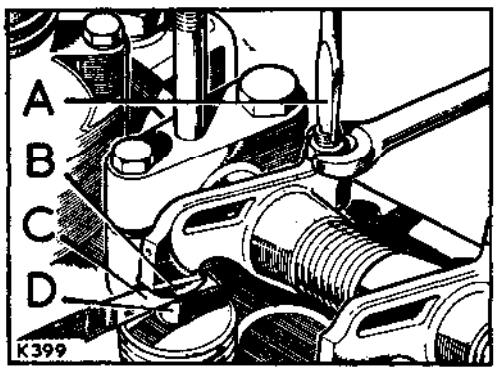


**Fig. A1-78. Setting tappet clearances**

A—Screwdriver
B—Rocker pad
C—Feeler gauge
D—Valve stem

## Operation A1-22—*continued*

5. Tighten the cylinder head and rocker shaft fixings in the order shown as follows:
   ½ in. UNF bolts—65 lb ft (8,9 mkg) torque load.
   $\frac{5}{16}$ in. UNF bolts—18 lb ft (2,4 mkg) torque load
6. Set the tappet clearances to .010 in. (0,25 mm) for all valves.

   The tappet setting is most easily carried out in the following sequence, No. 1 tappet being at the front of the engine:

   Set No. 1 tappet clearance with No. 8 valve fully open.
   Set No. 3 tappet clearance with No. 6 valve fully open.
   Set No. 5 tappet clearance with No. 4 valve fully open.
   Set No. 2 tappet clearance with No. 7 valve fully open.
   Set No. 8 tappet clearance with No. 1 valve fully open.
   Set No. 6 tappet clearance with No. 3 valve fully open.
   Set No. 4 tappet clearance with No. 5 valve fully open.
   Set No. 7 tappet clearance with No. 2 valve fully open.

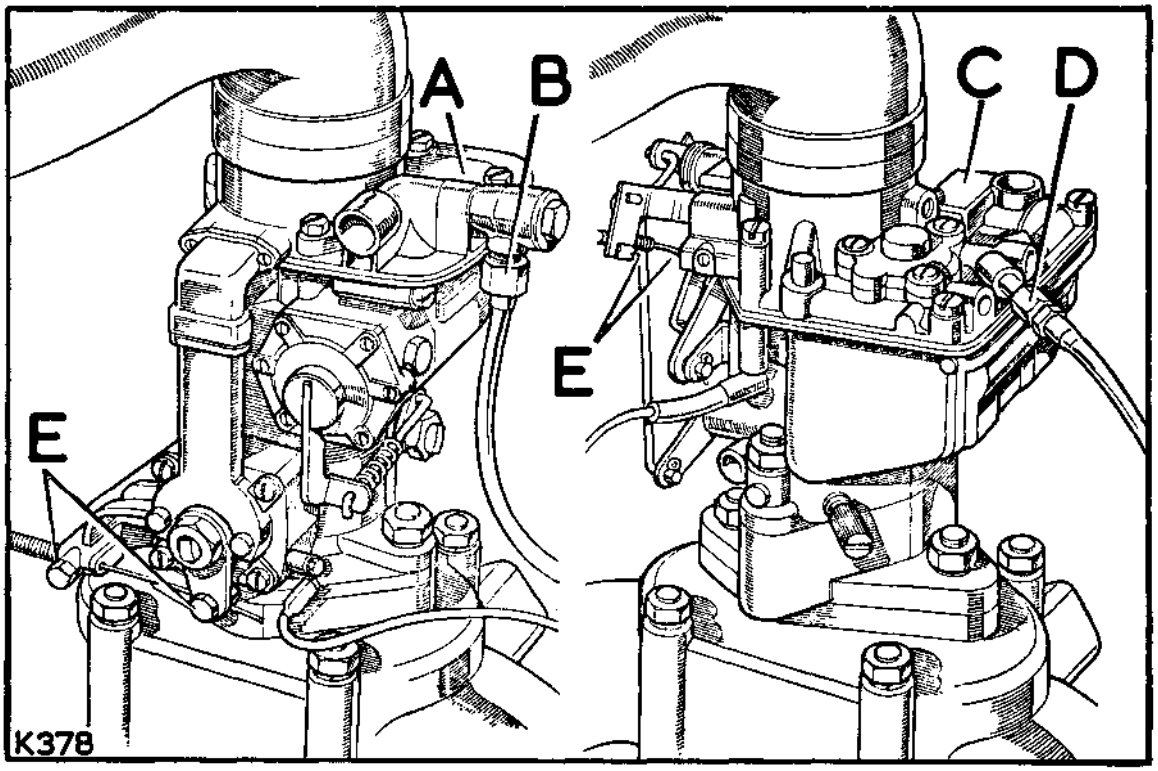


**Fig. A1-79. Location of carburetter controls and heater hoses**

A—Carburetter, Solex (where fitted)
B—Fuel inlet connection
C—Carburetter, Zenith (where fitted)
D—Fuel inlet connection
E—Cold start control, inner and outer cable fixings, Zenith carburetter

## Operation A1-22—*continued*

7. Refit the engine top cover, referring to Fig. A1-73.
8. Fit the front exhaust pipe to the manifold and, where applicable, refit the exhaust heat shield.

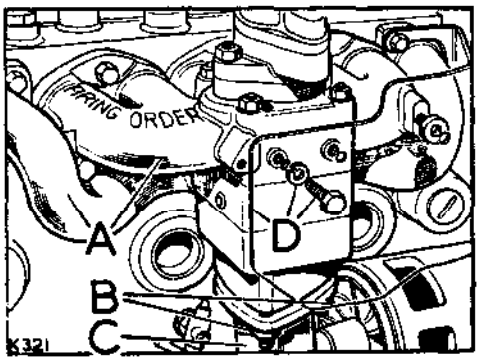


**Fig. A1-80. Front exhaust pipe fixings**

A—Exhaust manifold
B—Fixings for front exhaust pipe
C—Front exhaust pipe
D—Heat shield and fixings, if fitted

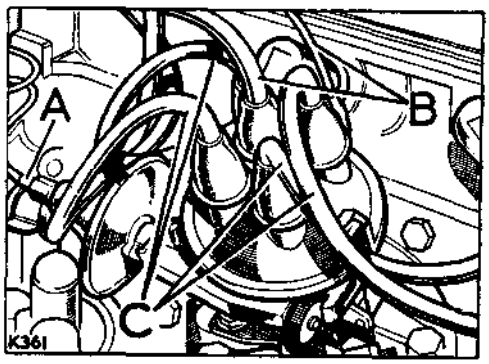


**Fig. A1-81. Distributor connections**

A—Vacuum pipe
B—High tension and low tension leads, connect at ignition coil
C—Ignition leads, connect at sparking plugs

9. Connect fuel inlet pipe at carburetter and retain pipe length in retaining clip at engine.
10. Connect the carburetter controls and, if fitted, the heater hoses.
11. Fit the fan cowl shroud and connect coolant hoses at thermostat housing. See Fig. A1-75.
12. Refit sparking plugs and connect oil gallery pipe.
13. Connect distributor leads and vacuum pipe.
14. Refill coolant system, allowing a full flow through the coolant drain taps before closing them.

**COOLANT SYSTEM**
**Bonneted Control Model, 2½ Litre Petrol**

| | Capacity | Imperial Unit | US Unit | Litres | Antifreeze | Frost Precaution |
|---|---|---|---|---|---|---|
| 88 | 18 pints | 18 pints | 21½ pints | 10,25 | 33⅓% | —25°F<br>—32°C |
| 109 | 18 pints | 18 pints | 21½ pints | 10,25 | 33⅓% | —25°F<br>—32°C |

15. Connect battery leads.
16. Refit air cleaner. Operation A1-2.
17. Refit the bonnet panel. Operation A1-1.
18. After the initial engine run, that is with the engine at normal running temperature, check the cylinder head fixings to the correct torque load with the sparking plugs removed.

## *Cylinder head, overhaul and decarbonize—Operation A1-23

*(For removal and refitting instructions, Operation A1-22 refers)*

Workshop hand tools:
Spanner sizes: ¼ in., $\frac{5}{16}$ in. AF open end
$\frac{7}{16}$ in. AF socket
2 BA open end
$\frac{5}{16}$ in. Whit open end
$\frac{7}{16}$ in. AF ring
Screwdriver (medium), Pliers, 1 lb hammer

Special tools:
Part No. 276102—Valve spring compressor
Part No. 274400—Inlet valve guide removal tool
Part No. 274401—Exhaust valve guide removal tool
Part No. 600959—Exhaust valve guide replacement tool
Part No. 601508—Inlet valve guide replacement tool
Torque wrench

### To dismantle and overhaul

1. Remove the inlet and exhaust manifold assembly. Operation A1-7.
2. Remove the thermostat housing complete. Operation A1-12.
3. Remove the valve assemblies and retain components in related sets.

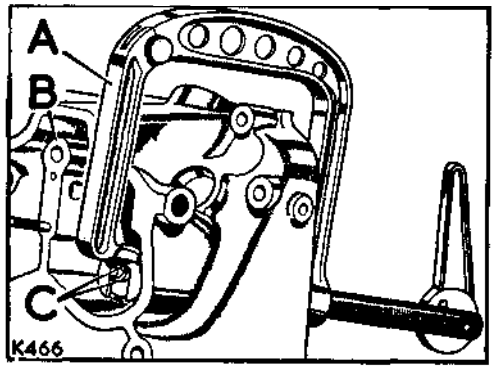


**Fig. A1-82. Valve assemblies**

A Special tool, Part No. 276102
B—Cylinder head
C—Split cones, remove before releasing special tool

4. Remove the oil seals from the valve guides.
5. Remove carbon deposits from the valve seats, combustion chambers, valves and also from the piston crowns, using suitable scrapers, abrasive cloth and a wire brush. Take care to prevent dislodged deposits from entering oilways and coolant passages.
6. Clean combustion deposits from valve guide bores.
7. Reface the valves: inlet valves 30° —¼°; exhaust valves 45° —¼°, using suitable grinding equipment, or replace as necessary. The valve faces should be flat and not distorted. Use a straight-edge to visually check.

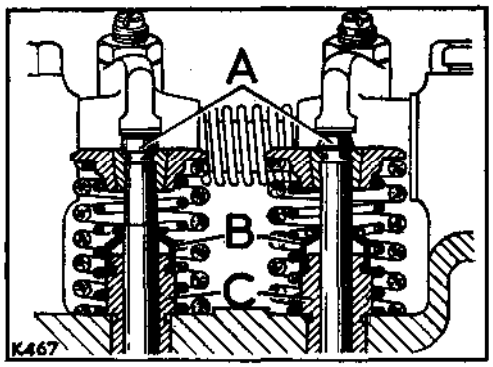


**Fig. A1-83. Valve guides and oil seals arrangement**

A—Valves
B—Oil seals, latest type shown seating externally on valve guides
C—Valve guides; early type have internal groove for oil seals

8. Check fit of valve stems in respective valve guides. If clearance is excessive, remove the guides, using the special drifts, Part No. 274401 for exhaust valve guides, Part No. 274400 for inlet valve guides.
9. Where replacement valve guides are to be fitted, lubricate the guides and their housing bores and drift into position using the special drift, Part No. 601508 for inlet valve guides, and special drift, Part No. 600959 for exhaust valve guides. Recheck the valve stem fit in the guide, paragraph 8 refers.

   The special drifts are so formed to avoid damage to the valve guides.
10. Reface the valve seats in the cylinder head, using suitable equipment. Valve seat angle: 30° for inlet, 45° for exhaust.

*Operations marked with an asterisk (*) can be carried out with the engine installed in the vehicle*

## Operation A1-23—*continued*

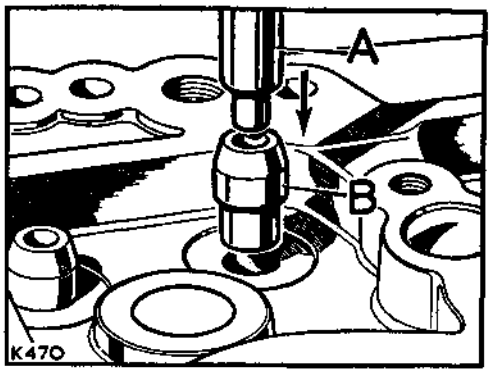


**Fig. A1-84. Fitting replacement valve guides**

A—Special tool B—Valve guide

11. Inspect the valve springs which are provided as paired assemblies. The springs must be an interference fit with each other.
12. Inspect the valve split cones and valve spring caps for general condition.
13. Inspect the cylinder head for general condition and for damage to threads.

**To assemble**

1. Assemble the oil seals to the valve guides.
2. Lubricate the valve stems and fit the valves to their respective valve guides.
3. Fit the valve springs and spring caps and, using the special tool, Part No. 276102, compress the springs and fit the split cones to the valve stem waists. Fig. A1-82 refers.
4. Remove the compression tool and ensure the assemblies are seated by tapping sharply on each valve stem end, using a hide mallet.
5. Complete the assembly by fitting the thermostat housing, Operation A1-12, and the manifolds assembly, Operation A1-7.

## *Tappet assemblies, remove and refit—Operation A1-24

Workshop hand tools:
Spanner sizes: ½ in. AF open ended, ½ in. AF ring
Pliers (cutting), Screwdriver (medium), Feeler gauges

Special tools:
Torque wrench
Part No. 530101—Tappet guide removal tool

### To remove

1. Remove bonnet panel. Operation A1-1.
2. Remove air cleaner. Operation A1-2.
3. Disconnect battery.
4. Remove valve gear, rocker shaft and push rods. Operation A1-20.
5. Remove cylinder head. Operation A1-22.
6. Remove tappet guide locating bolts at RH side of engine block.
7. Remove the tappet slides, leaving the guides in position to retain the rollers and ensure that they do not fall behind the camshaft. Remove the rollers, using a local made spring clip.

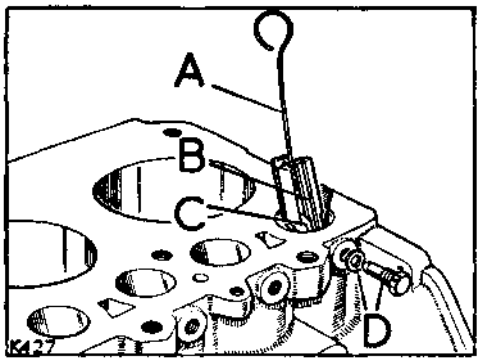


**Fig. A1-85. Removing tappets and rollers**

A—Spring clip
B—Tappet slide
C—Tappet roller
D—Locating screw and washer

8. Remove the tappet guides. The use of special tool, Part No. 530101 as illustrated will facilitate this procedure if the guides are difficult to remove by hand.

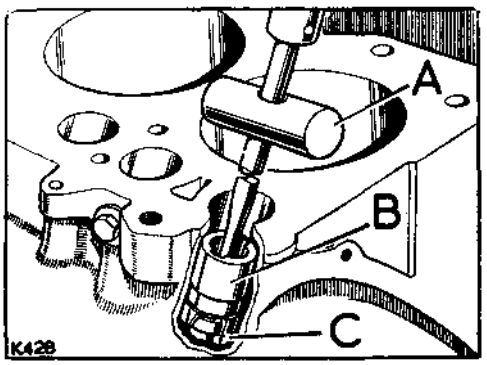


**Fig. A1-86. Removing tappet guides**

A—Special tool, Part No. 530101
B—Tappet guide
C—Extractor adaptor, part of special tool, Part No. 530101

9. It is advisable to retain the tappet slides, guides and rollers as related sets.

### To refit

1. Fit the tappet guides and engage the locating bolts sufficient to retain the guides.

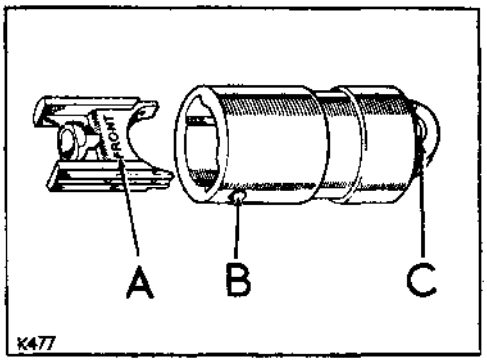


**Fig. A1-87. Tappet slides and rollers**

A—Letters 'FRONT' on slide to be toward front of engine
B—Hole for locating bolt
C—Larger chamfer on roller to be towards front of engine

*Operations marked with an asterisk (*) can be carried out with the engine installed in the vehicle*

## Operation A1-24—*continued*

2. Fit the tappet slides and rollers, positioning the components relative to the front of the engine as illustrated in Fig. A1-87.

3. Tighten the locating bolts and lock together in pairs, using suitable gauge soft iron wire.

4. Smear clean engine oil on the cylinder block and cylinder head gasket joint faces to aid subsequent alignment of bolt holes. Position the gasket on the block with the lettering 'PETROL' uppermost.

5. Position the cylinder head on to the gasket. Clean all deposits from fixing bolt threads and engage the fixings.

6. Refit the tappet push rods to their original bores.

   Ensure that they bottom correctly into the spherical seats.

7. Clean the rocker shaft fixing bolt threads of all deposits; fit the rocker shaft assembly and engage the fixings.

8. Tighten the cylinder head and rocker shaft fixings in the order shown as follows:

   ½ in. UNF bolts—65 lb ft (8,9 mkg) torque load.
   $\frac{5}{16}$ in. UNF bolts—18 lb ft (2,4 mkg) torque load.

9. Set the tappet clearances to .010 in. (0,25 mm) for each valve.

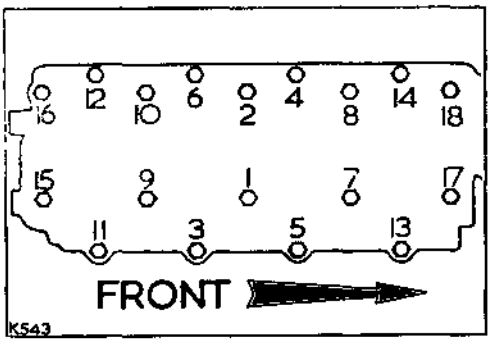


**Fig. A1-88. Order of tightening cylinder head fixings**

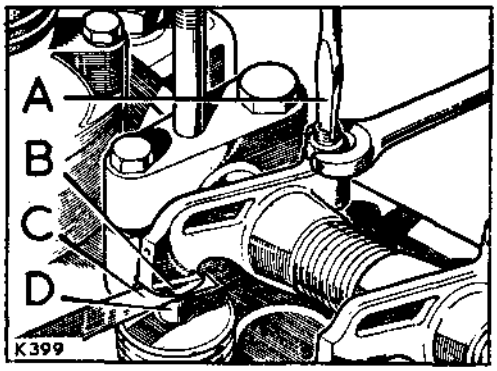


**Fig. A1-89. Setting tappet clearances**

A—Screwdriver B—Rocker pad
C—Feeler gauge D—Valve stem

The tappet setting is most easily carried out in the following sequence, No. 1 tappet being at the front of the engine:

Set No. 1 tappet clearance with No. 8 valve fully open.

Set No. 3 tappet clearance with No. 6 valve fully open.

Set No. 5 tappet clearance with No. 4 valve fully open.

Set No. 2 tappet clearance with No. 7 valve fully open.

Set No. 8 tappet clearance with No. 1 valve fully open.

Set No. 6 tappet clearance with No. 3 valve fully open.

Set No. 4 tappet clearance with No. 5 valve fully open.

Set No. 7 tappet clearance with No. 2 valve fully open.

10. Refit the engine top cover.

11. Complete refitting the cylinder head details, referring to Operation A1-22.

12. Refill the engine coolant system.

## Operation A1-24—*continued*

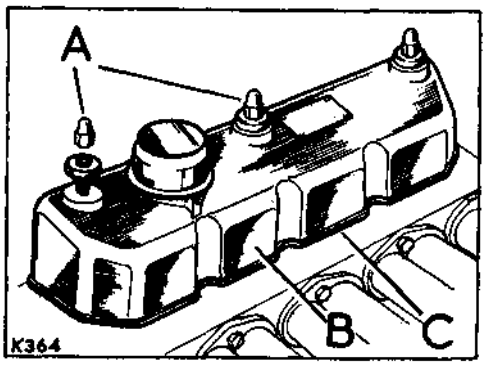


**Fig. A1-90. Engine top cover**

A—Fixings B—Top cover C—Joint washer

**COOLANT SYSTEM**
**Bonnated Control Model, 2¼ Litre Petrol**

| | Capacity | Imperial Unit | US Unit | Litres | Antifreeze | Frost Precaution |
|---|---|---|---|---|---|---|
| 88 | 18 pints | 18 pints | 21½ pints | 10,25 | 33⅓% | —25°F<br>—32°C |
| 109 | 18 pints | 18 pints | 21½ pints | 10,25 | 33⅓% | —25°F<br>—32°C |

13. Connect the battery leads.
14. Refit the air cleaner. Operation A1-2.
15. Refit the bonnet panel. Operation A1-1.
16. After the initial engine run, that is with the engine at normal running temperature, check the cylinder head fixings to the correct torque load with the sparking plugs removed.

## *Engine front cover and oil seal, remove and refit—Operation A1-25

Workshop hand tools:
Spanner sizes: 2 BA open end, ¼ in. AF socket
¼ in. AF, 7/16 in. AF open ended
Screwdriver (medium), Pliers

Special tools:
Part No. 530102—Spanner for starter dog

### To remove

1. Remove bonnet. Operation A1-1.
2. Remove radiator and grille panel. Operation A1-3.
3. Slacken dynamo fixings and remove fan belt.
4. Remove dynamo adjusting link to gain access to front cover fixings.

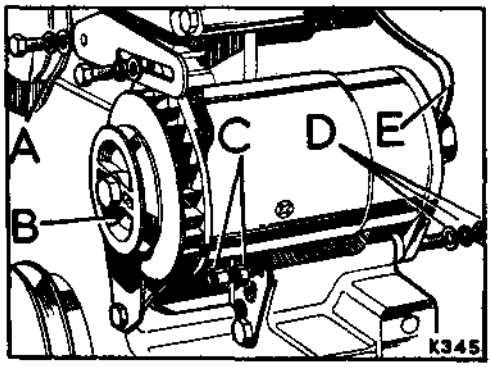


**Fig. A1-91. Dynamo fixings**

A—Adjusting link fixings
B—Fan belt pulley
C—At front support
D—At rear support
E—Electrical leads at dynamo

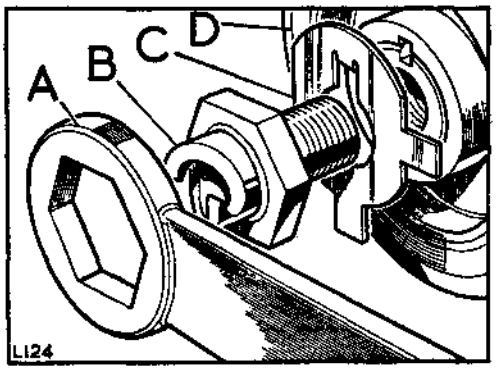


**Fig. A1-92. Fan belt driving pulley fixings**

A—Special tool, Part No. 530102 for starter dog
B—Starter dog
C—Lock plate
D—Fan belt driving pulley, key located

5. Remove the starter dog and fan belt driving pulley.
6. Separate the by-pass pipe from the thermostat housing.
7. Remove the front cover fixings, including those at sump front flange.
8. Remove the front cover and joint gaskets.

### Oil seal

If a replacement oil seal is required, proceed as follows:

1. Carefully lever the oil seal metal casing away from the housing bore sufficient to collapse the seal and allow its removal. Use a screwdriver or suitable metal strip as a lever.
2. Apply a thin coating of suitable jointing compound, such as Hylomar SQ 32M, to the oil seal metal surfaces.

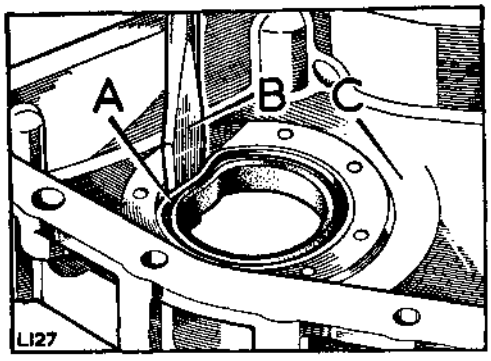


**Fig. A1-93. Oil seal removal**

A—Oil seal, shown collapsed
B—Suitable lever
C—Front cover inner face

3. Locate the oil seal squarely in the housing bore with the garter spring toward the operator and press fully in.

*Operations marked with an asterisk (*) can be carried out with the engine installed in the vehicle*

## Operation A1-25—*continued*

**Front cover, to refit**

1. It is of advantage temporarily to remove the fixing stud from the cylinder block front face. This will enable the front cover to be lifted sufficient to clear the edge of the sump gasket when offering the front cover to the engine.
2. Smear general purpose grease on both sides of the front cover and water inlet joint washers.
3. Continue the refitting by reversing the removal procedure, noting that the front cover is located to the cylinder block by dowels. Fig. A1-94 refers.
4. Refit the fixing stud if previously removed, from the front of the engine.
5. Fit the by-pass pipe to thermostat housing fixings. Fig. A1-94 refers.

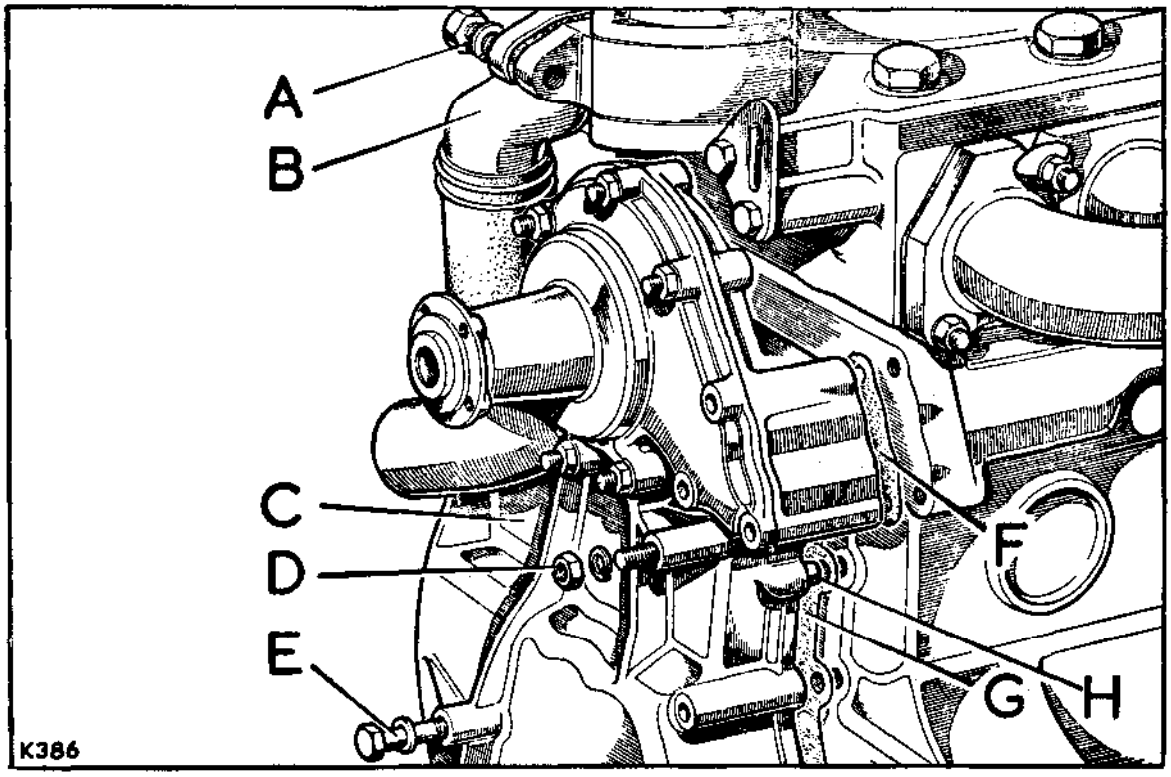


**Fig. A1-94. Front cover and bracket fixings**

A—Fixings for by-pass pipe
B—By-pass pipe
C—Front cover complete with water pump
D—Dynamo link fixing
E—Front cover fixings
F—Joint washer at water inlet
G—Joint washer
H—Locating dowels (2 off)

## Operation A1-25—*continued*

6. Fit the starter dog and fan belt driving pulley. Fig. A1-92 refers. The correct torque loading for the starter dog is 150 lb ft (20,5 mkg).
7. Fit the dynamo adjusting link, Fig. A1-91 refers. Set the fan belt tension to $\frac{5}{16}$ in. to $\frac{7}{16}$ in. (8 mm to 11 mm), checked by thumb pressure applied to the fan belt between the fan pulley and crankshaft pulley, when finally tightening the dynamo fixings.
8. Refit the radiator grille panel. Operation A1-3 and refill the coolant system.

**COOLANT SYSTEM**
**Bonneted Control Model, 2¼ Litre Petrol**

| | Capacity | Imperial Unit | US Unit | Litres | Antifreeze | Frost Precaution |
|---|---|---|---|---|---|---|
| 88 | 18 pints | 18 pints | 21½ pints | 10,25 | 33⅓% | —25°F<br>—32°C |
| 109 | 18 pints | 18 pints | 21½ pints | 10,25 | 33⅓% | —25°F<br>—32°C |

9. Refit the bonnet panel. Operation A1-1.

## *Timing chain tensioner, remove, inspect and refit—Operation A1-26

Workshop hand tools:
Spanner sizes: ½ in. AF, ⅝ in. AF socket, 7/16 in. x ½ in. AF open end (2 off), 2 BA open end
Screwdriver (medium), Pliers

### To remove

1. Remove bonnet panel. Operation A1-1.
2. Remove radiator and grille panel. Operation A1-3.

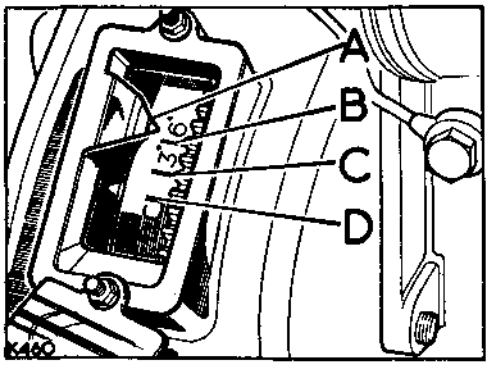


**Fig. A1-95. Timing marks on flywheel, early engines**

A—Timing pointer
B—6° mark, align when using 90–96 octane fuel
C—3° mark, align when using 80–85 octane fuel
D—TDC mark, align when using 74–76 octane fuel

3. Turn the crankshaft in the direction of rotation until the timing marks are aligned as illustrated.
4. Remove engine front cover. Operation A1-25.
5. Remove the fixings and withdraw the tensioner ratchet and spring from the piston housing.
6. Remove the piston housing fixings, compress the tensioner spring by hand and withdraw the tensioner arrangement complete.

### To dismantle and inspect

1. Remove the non-return valve ball, spring and plug from the piston housing.

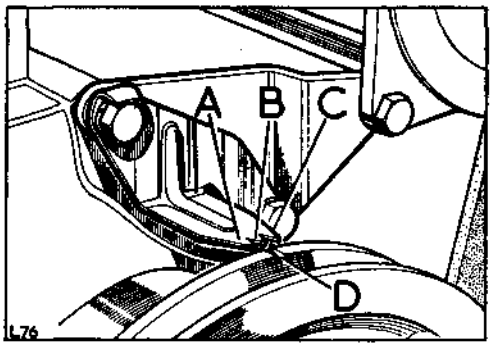


**Fig. A1-96. Timing marks at front cover**

A—6° tongue, align when using 90–96 octane fuel
B—3° tongue, align when using 80–85 octane fuel
C—TDC tongue, align when using 74–76 octane fuel
D—Mark on crankshaft pulley, align with appropriate tongue

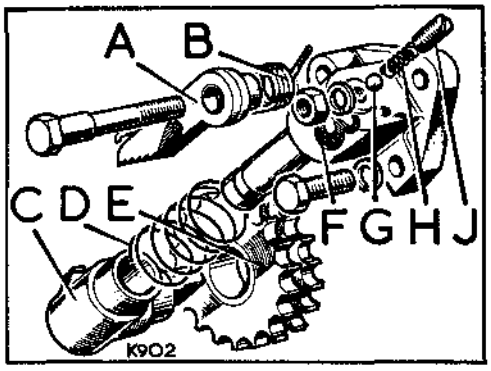


**Fig. A1-97. Timing chain tensioner details**

A—Ratchet
B—Ratchet spring
C—Cylinder
D—Chain tensioner spring
E—Idler wheel
F—Piston
G—Non-return ball valve
H—Spring for ball valve
J—Spring retainer plug

*Operations marked with an asterisk (*) can be carried out with the engine installed in the vehicle*

## Operation A1-26—*continued*

2. Clean the components, using clean fuel.
3. Replace piston and housing if unduly worn.
4. If the tensioner cylinder bush is unduly worn, the cylinder and bush complete must be renewed.
5. Replace the idler wheel and ratchet arm if the bushes are unduly worn.
6. Inspect the rubber pad on the chain vibration damper on the engine block and replace if grooved.
7. Ensure that all oil passage drillings are clear.

### To assemble

1. Refit the non-return valve ball, spring and plug to the piston housing. Fig. A1-97 refers.

### To refit

1. Assemble together the piston housing, tensioner spring, cylinder and idler wheel.
   Compress the assembly against the tensioner spring.
2. Offer up the assembly to the engine, locating the piston housing on the dowels and the cylinder spigot in the location slot.
3. Fit the ratchet and spring and allow the idler wheel to take up the timing chain slack.

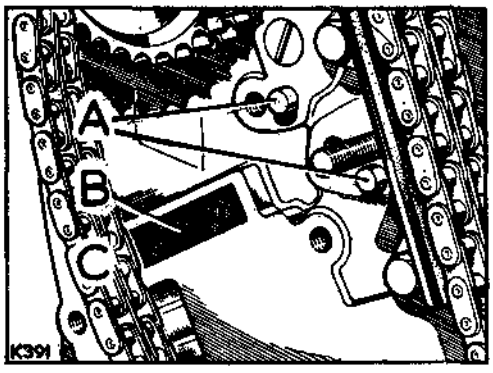


**Fig. A1-98. Timing chain tensioner location details**

A—Piston housing location dowels
B—Location slot for cylinder
C—Timing chain

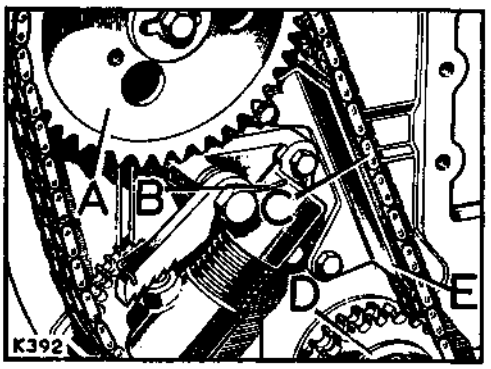


**Fig. A1-99. Timing chain and chainwheels arrangement**

A—Camshaft chainwheel
B—Ratchet spring
C—Timing chain, no slack at this side
D—Crankshaft chainwheel
E—Vibration damper

4. If necessary, adjust the position of the chain vibration damper to allow .010 in. (0,25 mm) maximum clearance between the timing chain and the vibration pad.
5. Temporarily refit the front cover and ensure that the timing marks are still correctly aligned at the flywheel or front cover as applicable. Figs. A1-95 and A1-96 refer. Then, providing the camshaft has not been rotated, this will ensure that the engine valve timing has not been inadvertently disturbed. If there is any doubt, check as detailed in 'Valve timing procedure', Operation A1-27.
6. Refit the engine front cover. Operation A1-25.
7. Refit the radiator grille panel, Operation A1-3, and refill the coolant system.
8. Refit the bonnet panel. Operation A1-1.

**COOLANT SYSTEM**
**Bonneted Control Model, 2½ Litre Petrol**

| | Capacity | Imperial Unit | US Unit | Litres | Antifreeze | Frost Precaution |
|---|---|---|---|---|---|---|
| 88 | 18 pints | 18 pints | 21½ pints | 10,25 | 33⅓% | —25°F<br>—32°C |
| 109 | 18 pints | 18 pints | 21½ pints | 10,25 | 33⅓% | —25°F<br>—32°C |

## *Timing gears and chain, remove and refit—Operation A1-27

**This operation includes valve timing procedure**

Workshop hand tools:
Spanner sizes: 7/16 in. x ½ in. AF open end (2 off)
½ in. AF, ⅝ in. AF socket
2 BA open end
Screwdriver (medium), Pliers

Special tools:
Part No. 507231—Chainwheel extractor
Dial test indicator and bracket

### To remove

1. Remove bonnet panel. Operation A1-1.
2. Remove radiator and grille panel. Operation A1-3.
3. Remove the engine front cover. Operation A1-25.
4. Remove timing chain tensioner. Operation A1-26.
5. Lift off the timing chain and remove the chain. wheels, using special extractor tool, Part No. 507231 to withdraw the camshaft chainwheel.

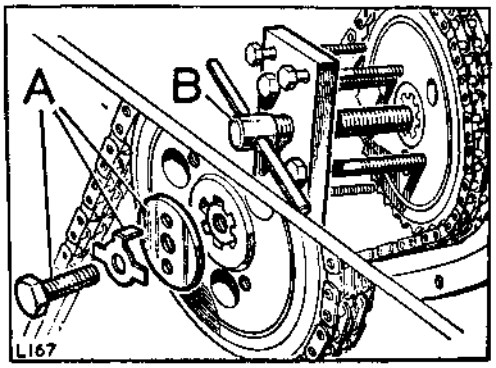


**Fig. A1-100. Removing camshaft chainwheel**

A—Camshaft chainwheel fixings
B—Extractor, Part No. 507231

6. Inspect the chainwheels and timing chain for damage and general condition.

### To refit and set valve timing—engines with timing pointer on flywheel housing

1. Remove the engine top cover.

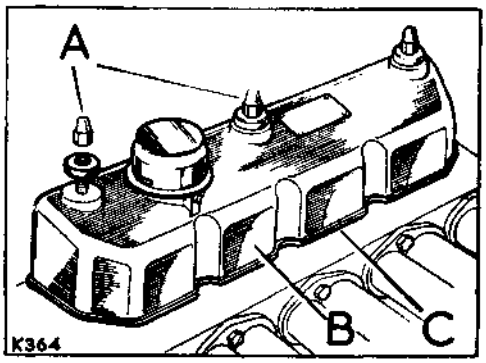


**Fig. A1-101. Engine top cover**

A—Fixings for top cover
B—Top cover
C—Joint washer

2. Remove the inspection cover plate from the flywheel housing.
3. Fit the crankshaft chainwheel, key located, larger shoulder first.

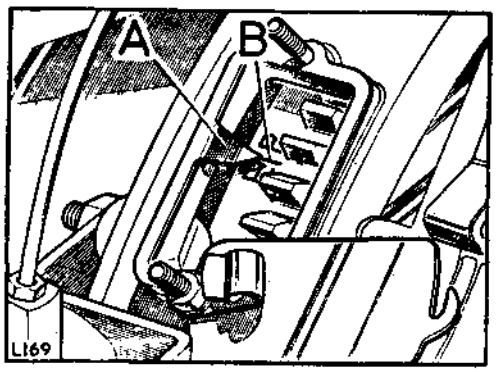


**Fig. A1-102. Timing marks**

A—Pointer at flywheel housing
B—EP mark on flywheel

4. Turn the crankshaft in direction of rotation until the EP mark on flywheel is in line with timing pointer.

*Operations marked with an asterisk (*) can be carried out with the engine installed in the vehicle*

## Operation A1-27—*continued*

5. Fit the camshaft chainwheel on to the camshaft splines. Do not lock the fixings at this stage.
6. Rotate the camshaft until No. 1 cylinder exhaust valve is fully closed and set the tappet clearance to .010 in. (0,25 mm).

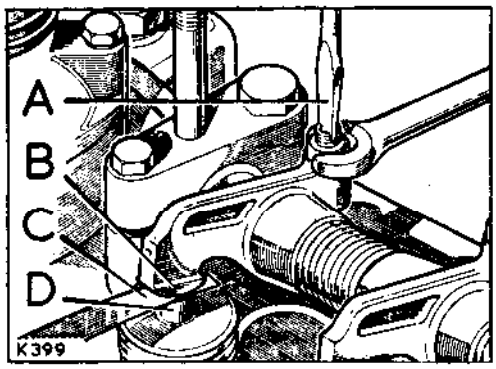


**Fig. A1-103. Adjusting tappets**

A—Screwdriver
B—Rocker pad
C—Feeler gauge
D—Valve stem

7. Fit a dial test indicator so that the 'fully open' position of the valve can be ascertained.

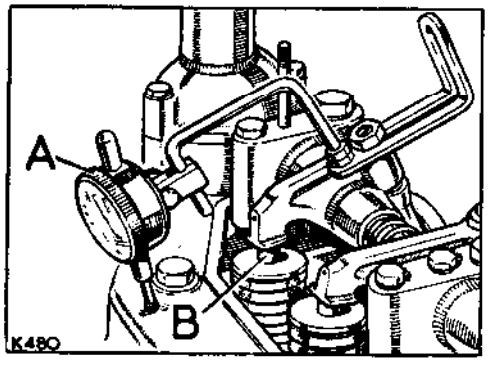


**Fig. A1-104. Dial test indicator in position**

A—Dial test indicator
B—No. 1 cylinder exhaust valve

8. Turn the camshaft in direction of rotation until the rocker pad has nearly opened the valve fully. Stop camshaft rotation and suitably mark the chainwheel and the timing casing relative to each other.
9. Note the reading on the dial test indicator then further turn the camshaft in direction of rotation until the dial test indicator needle has reached the same position as previously noted. Stop rotation of camshaft.
10. Suitably mark the chainwheel adjacent to the mark previously made on the timing casing, then make a third mark to bisect the angle between the two previously made marks.

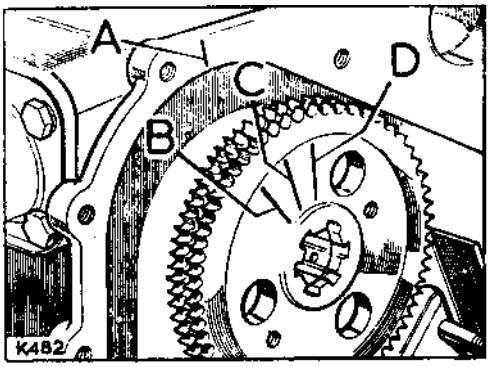


**Fig. A1-105. Chainwheel marking**

A—Mark previously made on timing casing
B—Second mark on chainwheel
C—Mark between two previously made marks on chainwheel
D—Mark first made on chainwheel

11. Turn the camshaft against the direction of rotation and align the third (middle) mark with the mark on the timing casing.

    No. 1 exhaust valve is now fully open.

12. Fit the timing chain to the chainwheels with 'no slack' on the driving side.

    If the chain is slack when fitted it is necessary to reposition the camshaft chainwheel on the camshaft splines which are off-set to allow for this adjustment. It will then be advisable to re-check the valve timing. Lock the camshaft chainwheel fixings when satisfactory.

## Operation A1-27—*continued*

13. Refit the inspection cover to the flywheel housing.
14. Refit the remaining components as detailed under 'To rebuild' at the end of this Operation.

**To refit and set valve timing—engines with timing pointer on engine front cover**

1. Fit the crankshaft chainwheel, key located, larger shoulder first.
2. Rotate the crankshaft until the keyway in the crankshaft front end is vertical in relation to the cylinder bore. No. 1 cylinder piston is now at top dead centre, that is, at the position required for valve timing.

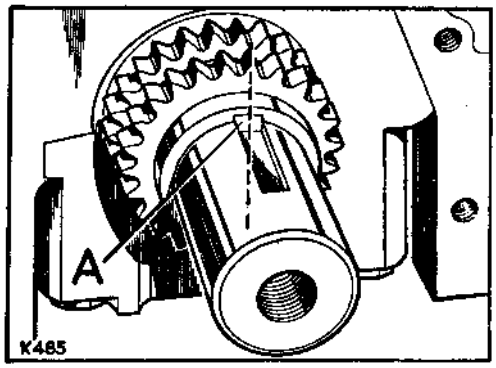


**Fig. A1-106. Crankshaft, front end**

A—Key for chainwheel in vertical position

3. Fit the camshaft chainwheel, using keyway marked 'P', and rotate the chainwheel until the groove marked 'P' is in line with the centre of the tapped hole as illustrated.
4. Fit the crankshaft chainwheel, locating on the key.
5. With the camshaft chainwheel positioned with the groove marked 'P' aligned with the tapped hole and with the crankshaft chainwheel keyway positioned vertical, fit the timing chain. There must be no slack chain on the driving side.

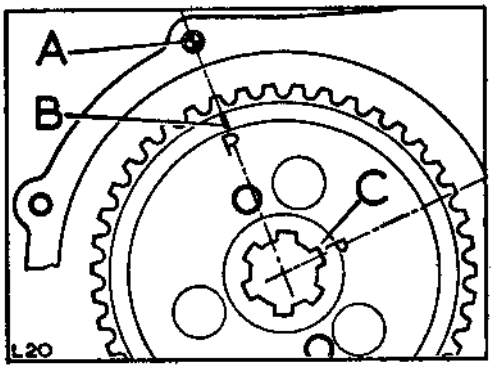


**Fig. A1-107. Camshaft chainwheel in position**

A—Tapped hole in cylinder block front face
B—Groove marked 'P' in line with centre of tapped hole
C—Fit spline marked 'P' on to camshaft key

6. With the chainwheels set in the above relationship, the valve timing is now correct. Lock the camshaft chainwheel fixings.

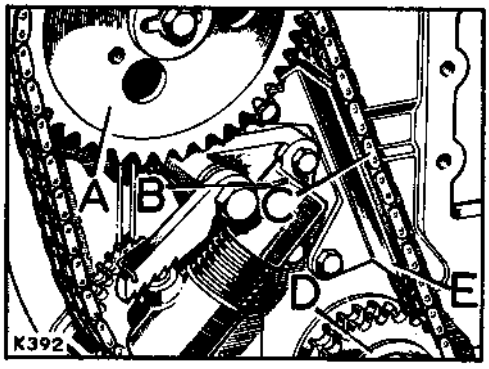


**Fig. A1-108. Chainwheels fitted**

A—Camshaft chainwheel
B—Ratchet spring
C—Ensure that there is 'no slack' at driving side of chain
D—Crankshaft chainwheel
E—Vibration damper

## Operation A1-27—*continued*

**To rebuild**

1. Refit the engine top cover. Fig. A1-101 refers.
2. Refit the timing chain tensioner. Operation A1-26.
3. Refit the engine front cover. Operation A1-25.
4. Refit the radiator grille panel. Operation A1-3.
5. Refill the engine coolant system, allowing a full flow through the coolant drain taps before closing them.
6. Refit the bonnet panel. Operation A1-1.

**COOLANT SYSTEM**
**Bonneted Control Model, 2¼ Litre Petrol**

| | Capacity | Imperial Unit | US Unit | Litres | Antifreeze | Frost Precaution |
|---|---|---|---|---|---|---|
| 88 | 18 pints | 18 pints | 21½ pints | 10,25 | 33⅓% | —25°F<br>—32°C |
| 109 | 18 pints | 18 pints | 21½ pints | 10,25 | 33⅓% | —25°F<br>—32°C |

## *Crankcase sump, remove and refit—Operation A1-28

Workshop hand tools:
Spanner sizes: ½ in. AF ring, $\frac{7}{16}$ in. BSF socket

### To remove

1. Drain off the engine lubricating oil.
2. Remove the fixings, lower and withdraw the sump.

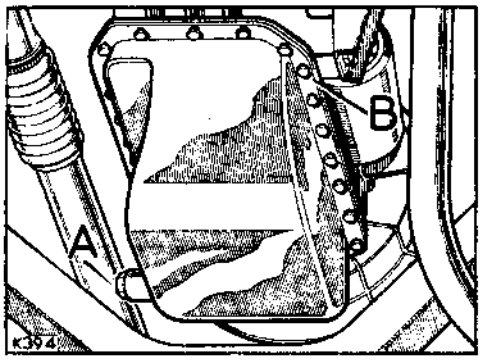


**Fig. A1-109. View of crankcase sump**

A—Drain plug B—Sump fixings

### To refit

1. Fit a new joint washer and reverse the removal procedure.
2. Replenish engine lubricating oil to 'high' mark on dipstick and check level after engine run.

**ENGINE LUBRICANT CAPACITY**
**Bonneted Control Model, 2¼ Litre Petrol**

| | | Capacity | Imperial Unit | US Unit | Litres |
|---|---|---|---|---|---|
| 88 | Engine .... ....<br>Filter .... ....<br>Engine and Filter .... | 11 pints<br>1½ pints<br>12½ pints | 11 pints<br>1½ pints<br>12½ pints | 13 pints<br>1.8 pints<br>14.8 pints | 6,0<br>0,85<br>6,85 |
| 109 | Engine .... ....<br>Filter .... ....<br>Engine and Filter .... | 11 pints<br>1½ pints<br>12½ pints | 11 pints<br>1½ pints<br>12½ pints | 13 pints<br>1.8 pints<br>14.8 pints | 6,0<br>0,85<br>6,85 |

*Operations marked with an asterisk (*) can be carried out with the engine installed in the vehicle*

## *Oil pump, remove and refit—Operation A1-29

*(For overhaul instructions Operation A1-30 refers)*

Workshop hand tools:
Spanner sizes: ½ in. AF, $\frac{7}{16}$ in. BSF socket, ½ in. AF ring

### To remove

1. Remove crankcase sump. Operation A1-28.
2. Remove the oil pump fixings and withdraw the assembly complete with drive shaft.

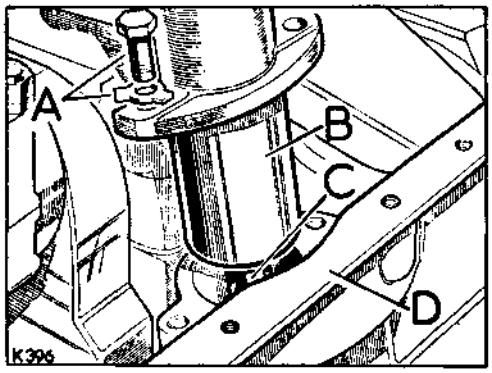


**Fig. A1-110. Oil pump and drive shaft**

A—Fixings
B—Oil pump
C—Drive shaft, longer splines engaged in pump
D—Sump joint face

### To refit

1. Offer up the pump and drive shaft and engage the drive splines at the engine. Fit the fixings and secure.
2. Fit the crankcase sump and joint gasket.
3. Fill sump with clean oil to 'high' mark on dipstick. Check level and add oil if necessary after engine run.

**ENGINE LUBRICANT CAPACITY**
**Bonnated Control Model, 2¼ Litre Petrol**

| | | Capacity | Imperial Unit | US Unit | Litres |
|---|---|---|---|---|---|
| 88 | Engine .... .... | 11 pints | 11 pints | 13 pints | 6,0 |
| | Filter .... .... | 1½ pints | 1½ pints | 1.8 pints | 0,85 |
| | Engine and Filter .... | 12½ pints | 12½ pints | 14.8 pints | 6,85 |
| 109 | Engine .... .... | 11 pints | 11 pints | 13 pints | 6,0 |
| | Filter .... .... | 1½ pints | 1½ pints | 1.8 pints | 0,85 |
| | Engine and Filter .... | 12½ pints | 12½ pints | 14.8 pints | 6,85 |

## *Oil pump, overhaul—Operation A1-30

*(For removal and refitting instructions, Operation A1-29 refers)*

Workshop hand tools:
Spanner sizes: $\frac{13}{16}$ in. AF, $\frac{1}{2}$ in. AF socket, $1\frac{3}{8}$ in. AF open end
$\frac{1}{2}$ lb Hammer, Flat ended drift, Feeler gauges

**To dismantle**

1. Unscrew the union nut and withdraw filter from pump.
2. Remove the fixings and withdraw the cover from the body.
3. Withdraw the oil pump gears.
4. Remove the oil pressure relief valve components.
5. Clean all components and inspect for general condition.
6. Check the radial clearance and end-float of the gears as illustrated.

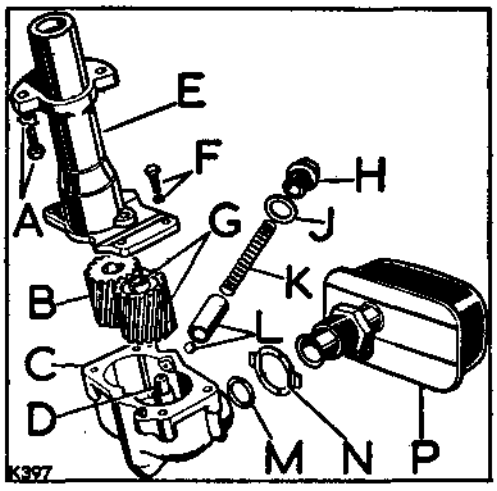


**Fig. A1-111. Exploded view of oil pump**

A—Fixings, oil pump to cylinder block
B—Pump drive gear
C—Pump body
D—Idler gear spindle
E—Pump cover and shaft housing
F—Fixings, cover to body
G—Idler gear and bush assembly
H—Threaded plug
J—Washer
K—Spring
L—Relief valve ball and plunger
M—Sealing ring
N—Lockwasher
P—Oil filter

7. If necessary the idler gear bush may be renewed. Press the new bush into the gear, drill the lubrication hole .125 in. (3,175 mm) and ream the bush to .5 in. (12,7 mm).

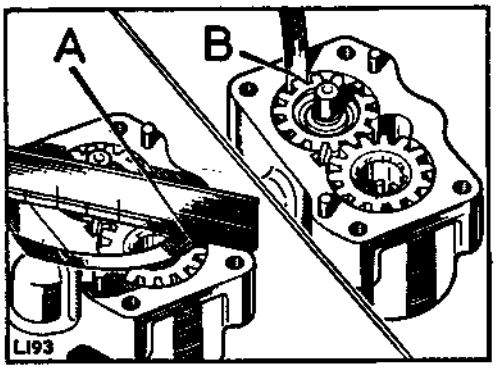


**Fig. A1-112. Checking clearance of oil pump gears**

A—Drive gear (steel)
B—Idler gear (aluminium)

8. Inspect the pressure relief valve ball seating and renovate, if necessary, using a locally manufactured lapping tool as illustrated.
9. The lapping tool may be installed in a drilling machine or hand brace and the ball seating refaced, using coarse grinding paste. The tool may then be removed and used to 'hand lap' the ball seating with fine grinding paste to a good finish. The seat must then be thoroughly cleaned.

**Clearances:**

| | |
|---|---|
| End-float, steel gear | .002 in. (0,05 mm) to .005 in. (0,12 mm) |
| End-float, aluminium gear | .003 in. (0,07 mm) to .006 in. (0,15 mm) |
| Radial clearance of gears | .001 in. to .004 in. (0,02 mm to 0,10 mm) |
| Backlash of gears | .006 in. to .012 in. (0,15 mm to 0,28 mm) |

*Operations marked with an asterisk (*) can be carried out with the engine installed in the vehicle*

## Operation A1-30—*continued*

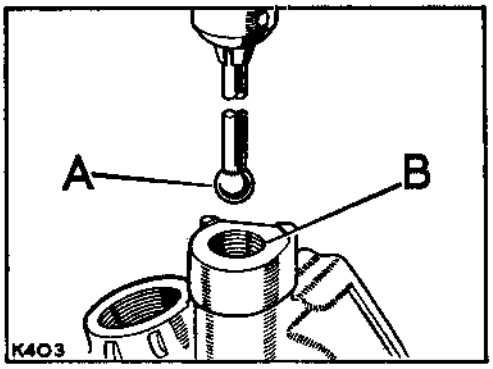


**Fig. A1-113. Lapping tool for ball valve seat**

A—Steel ball, Rover Part No. 3748, soldered to suitable tubing
B—Relief valve housing bore

**To assemble**

1. Fit the pump gears to the body, with the plain portion of the drive gear bore uppermost.
2. Smear the joint faces with suitable jointing compound and fit the pump cover to the pump body, locating on the dowels.
3. Assemble the pressure relief valve components to the housing bore. When fitting the plunger, insert the end with the integral ball seating first.
4. Fit the oil filter to the pump.
5. Position the filter such that it will be square to the sump baffle plate when fitted and secure with the lockwasher.

## *Clutch assembly and flywheel, remove and refit—Operation A1-31

*(For overhaul instructions, Section B refers. For flywheel data see Engine detail data at end of this Section)*

Workshop hand tools:
Spanner sizes: ½ in. AF, ⅝ in. AF socket
7/16 in. AF open end, 7/16 in. AF socket
7/16 in. BSF open end
1 lb hammer, Small chisel

Special tools:
Part No. 605022—Clutch plate alignment gauge
Torque wrench
Dial test indicator

### To remove

**Note:** If it is required to remove the clutch only, it is not necessary to remove the seat base nor completely remove the gearbox. Proceed with the gearbox removal, Operation C1-3, but only withdraw the gearbox rearward approximately 5 in. (127 mm), to give access to the clutch fixings.

1. Remove the front floor. Operation A1-4.
2. Remove the gearbox complete, as detailed in Section C.
3. Mark the position of the clutch assembly cover plate in relation to the flywheel. The marks are for use during subsequent refitting, when, with the marks aligned, the original balance condition will be regained.
4. Remove the fixings and withdraw the clutch assembly from the flywheel. Withdraw the clutch plate which is released during this procedure.
5. Remove the fixings and withdraw the flywheel.

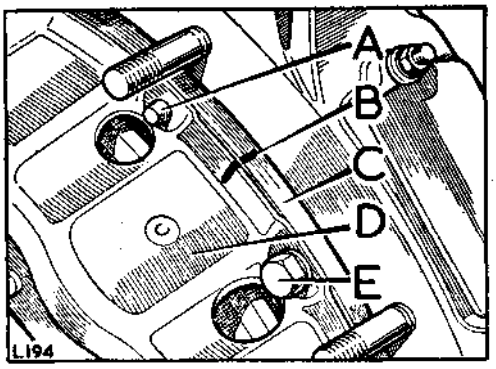


**Fig. A1-114. Clutch assembly fixings**

A—Locating dowel
B—Suitably mark clutch cover relative to flywheel
C—Flywheel
D—Clutch assembly
E—Fixings for clutch (6 off)

### To refit

1. Fit the flywheel to the crankshaft and tighten the fixings to 60 lb ft to 65 lb ft (8,5 mkg to 9 mkg) torque load. Do not lock the fixings at this stage.

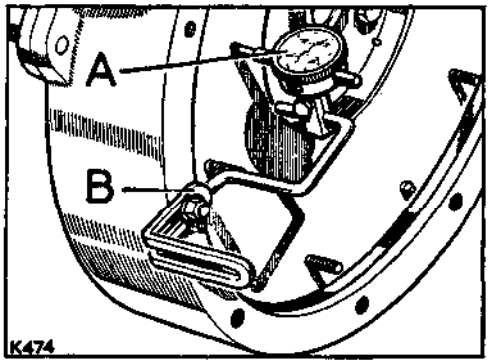


**Fig. A1-115. Checking run-out on flywheel face**

A—Dial test indicator
B—Suitable bracket

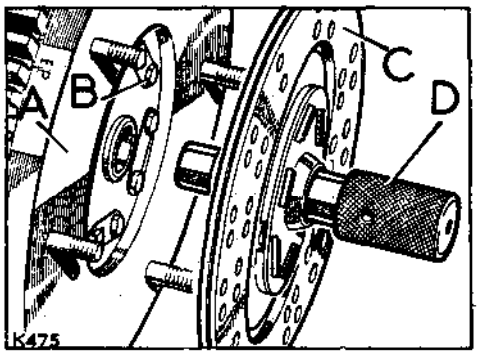


**Fig. A1-116. Centralising clutch driven plate**

A—Flywheel
B—Flywheel fixings
C—Driven plate
D—Centralising tool or slave primary shaft

*Operations marked with an asterisk (*) can be carried out with the engine installed in the vehicle*

## Operation A1-31—*continued*

2. Check the run-out on the flywheel face as illustrated. The run-out must not exceed .002 in. (0,05 mm).
3. Lock the flywheel fixings.
4. Offer the clutch driven plate to the primary shaft and ensure that it will slide easily on all the splines.
5. Place the driven plate in position on the flywheel with the longer end of the central boss away from the engine.
6. Centralise the driven plate with the flywheel, using a slave primary shaft or the special centralising tool, Part No. 605022.
7. Offer up the clutch assembly to the flywheel, aligning the previously made relationship markings. Fig. A1-114 refers.
8. Fit the fixings and tighten evenly one turn at a time, using diagonal selection to avoid distortion of the clutch cover, to 22 lb ft to 25 lb ft (3,0 mkg to 3,5 mkg) torque load.
9. Lock the clutch assembly fixings where applicable.
10. Remove the centralising tool or slave shaft.
11. Refit the gearbox as detailed in Section C.
12. Check and set the clutch pedal adjustment as detailed in Section B.
13. Refit the front floor. Operation A1-4.

## *Rear main bearing oil seal and flywheel housing, remove and refit—Operation A1-32

Workshop hand tools:
Spanner sizes: $\frac{7}{16}$ in. AF, $\frac{9}{16}$ in. AF open end
$\frac{5}{16}$ in. BSF, $\frac{7}{16}$ in. BSF open end
$\frac{7}{16}$ in. AF, $\frac{1}{2}$ in. AF, $\frac{9}{16}$ in. AF, $\frac{5}{8}$ in. AF, $\frac{13}{16}$ in. AF socket
$\frac{1}{2}$ in. AF ring
$\frac{7}{16}$ in. BSF socket
Screwdriver (medium), Pliers, snipe nosed
1 lb hammer, Small chisel, Feeler gauges

Special tools:
Part No. 600963—Engine lifting sling
Part No. 270304—Guides for rear main bearing oil seal (2 off)
Part No. 605022—Clutch plate alignment gauge
Torque wrench

### To remove

1. Remove bonnet panel. Operation A1-1.
2. Remove the front floor. Operation A1-4.
3. Remove gearbox assembly. Section C.
4. Remove the starter motor. Operation A1-9.
5. Remove the crankcase sump. Operation A1-28.
6. Remove the clutch assembly and flywheel. Operation A1-31.
7. Fit suitable lifting equipment and support the engine weight.

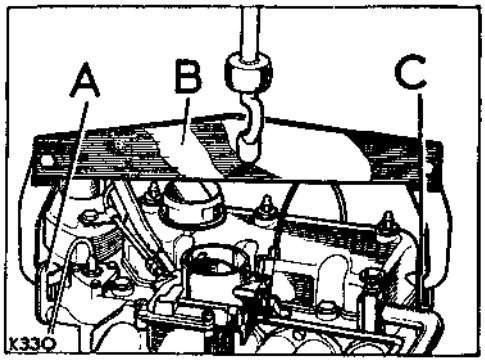


**Fig. A1-117. Lifting sling in position**

A—Front lifting bracket
B—Engine lifting sling, Part No. 600963, engaged in lifting brackets
C—Rear lifting bracket

8. Remove the packing piece from between the flywheel housing and the chassis cross-member, previously fitted during gearbox removal.
9. Remove the fixings and withdraw the flywheel housing. Remove the oil sealing ring.

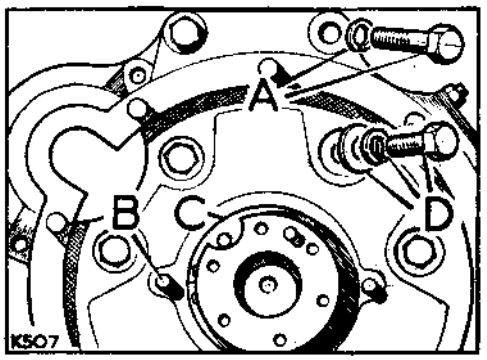


**Fig. A1-118. Flywheel housing fixings**

A—Fixings at flange
B—Locating dowels
C—Oil seal in recess
D—Fixings in counterbores

10. Remove the rear bearing cap.
11. Remove the fixings and detach the two halves of the rear main bearing retainer from the cylinder block and rear bearing cap respectively. The halves are dowel located.

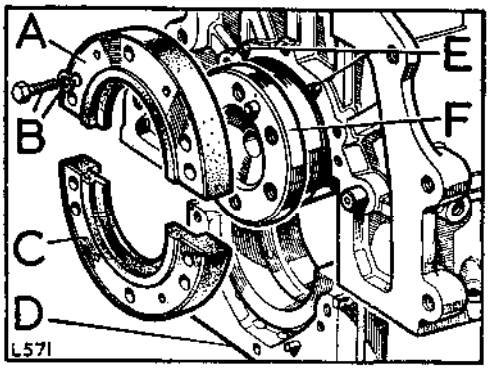


**Fig. A1-119. Seal retainer fixings**

A—Seal retainer upper half
B—Fixings for seal retainer
C—Seal retainer lower half
D—Rear main bearing cap
E—Locating dowels
F—Crankshaft flange, rotate to align cut-out with fixings

*Operations marked with an asterisk (*) can be carried out with the engine installed in the vehicle*

## Operation A1-32—*continued*

12. Remove the oil seal from the crankshaft.

### Rear main bearing oil seal, to refit

1. Assemble the garter spring on the oil seal journal of the crankshaft, laying the spring around the journal, with the hook and the eye adjacent to one another, then insert the hook into the eye. See Fig. A1-121. Care must be taken to ensure that during this operation the spring is not stretched at all.

   The spring should be moved along the journal until it is against the thrower flange.

2. Apply Silicone Grease MS4 to the crankshaft oil seal journal and to both sides of the split oil seal sealing lip.

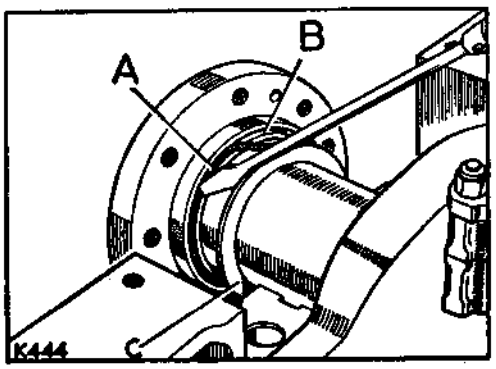


**Fig. A1-121. Fitting garter spring to recess**

A—Garter spring
B—Oil seal recess for garter spring
C—Thrower flange

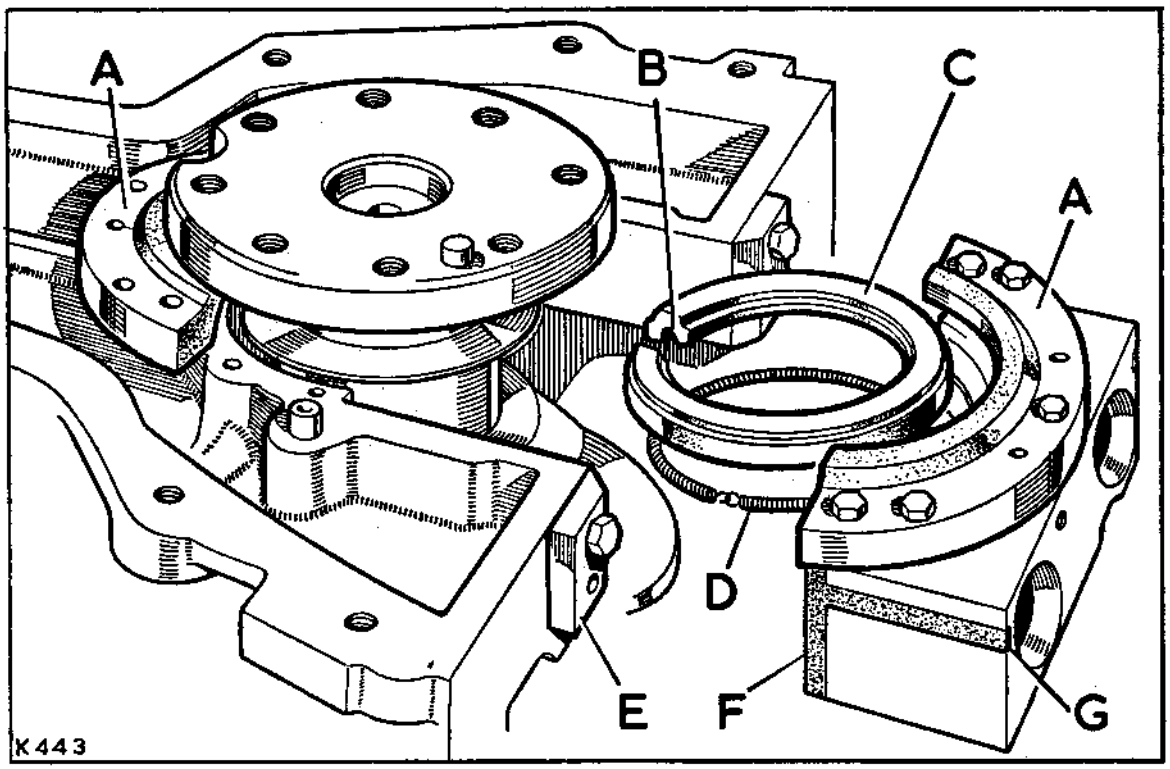


**Fig. A1-120. Oil seal details**

A—Retainer halves
B—Split line of seal to be towards top of engine
C—Split oil seal
D—Garter spring, hook and eye to be midway between split and hinge of oil seal when fitted
E—Guides, Part No. 270304, for rear main bearing cap 'T' seals
F—Trim these edges before fitting to avoid seal folding up when fitting
G—Trim these ends when cap is fitted to allow $\frac{1}{32}$ in. (0,8 mm) protrusion

## Operation A1-32—*continued*

Open the split seal sufficiently to allow it to be fitted over the crankshaft oil seal journal. Recess in oil seal must be towards thrower flange and garter spring.

The oil seal must not be repeatedly fitted and removed from the crankshaft, as this can damage the sealing lip.

3. Ensure that the hook and eye of the garter spring are located mid-way between the split and hinge of the oil seal. Then, using a small screwdriver or similar tool, gently ease the spring into the recess in the oil seal.
4. Rotate the oil seal until the split is on the vertical axis pointing towards the cylinder head and in its approximate running position on the journal; this position is important.

   Apply Hylomar SQ32M sealing compound to the seal diameter of the two half plates, using either an applicator or a brush.

   **Important:** Do not degrease the half seal plates with trichlorethylene, but wipe clean with a dry cloth prior to applying the Hylomar.
5. Fit one half of the oil seal retainer on to the crankcase dowels. The oil seal should be compressed to assist assembly, also ensure that it is correctly located in the retainer recess. Bolt the retainer to the crankcase, leaving the two bolts adjacent to the split line finger-tight, fully tighten the remaining three bolts. In order to fit the bolt it will be necessary to rotate the crankshaft; it is essential to hold the seal so that it does not rotate with the crankshaft.
6. Bolt the other half of the oil seal retainer on to the main bearing cap, in the same way. Apply Silicone grease MS4 to the 'T' seals and fit them to the main bearing cap. The cap must be off the crankcase for these operations. Trim the edges of the 'T' seals as illustrated to prevent them from fouling the cylinder block when fitted.
7. Fit the main bearing cap with the seal retainer, bearing shell and 'T' seals to the crankcase until there is a $\frac{1}{32}$ in. (0,8 mm) gap between the cap and crankcase. Use the guides, Part No. 270304 to feed the 'T' seals past the crankcase edges, see Fig. A1-120.
8. Ensure that the seal remains correctly located in the retainer recess.
9. Pull the cap down slowly, ensuring there is no buckling of the split seal or misalignment of the butt joint.
10. Tighten the cap bolts to 85 lb ft (11,5 mkg) torque load and recheck that the seal is located correctly in the housing.
11. Finally tighten the bolts securing the retainer halves. Turn the bolt heads so that the hexagon corners will not foul the flywheel housing seal when fitting.

### Flywheel housing, to refit

12. Replace the oil seal in the flywheel housing recess and fit the housing to the cylinder block. Fig. A1-118 refers.
13. Refit the clutch and flywheel. Operation A1-31.
14. Refit the crankcase sump. Operation A1-28. During this procedure trim the ends of the rear main bearing 'T' seals to allow approximately $\frac{1}{32}$ in. (0,8 mm) protrusion from the rear bearing cap face. Fig. A1-120 refers.
15. Refit the starter motor. Operation A1-9.
16. Refit the gearbox, as described in Section C, and remove the engine lifting equipment.
17. Refit the front floor. Operation A1-4.
18. Replenish engine lubricating oil as necessary.

**ENGINE LUBRICANT CAPACITY**
**Bonneted Control Model, 2¼ Litre Petrol**

| | | Capacity | Imperial Unit | US Unit | Litres |
|---|---|---|---|---|---|
| 88 | Engine | 11 pints | 11 pints | 13 pints | 6,0 |
| | Filter | 1½ pints | 1½ pints | 1.8 pints | 0,85 |
| | Engine and Filter | 12½ pints | 12½ pints | 14.8 pints | 6,85 |
| 109 | Engine | 11 pints | 11 pints | 13 pints | 6,0 |
| | Filter | 1½ pints | 1½ pints | 1.8 pints | 0,85 |
| | Engine and Filter | 12½ pints | 12½ pints | 14.8 pints | 6,85 |

19. Refit the bonnet panel. Operation A1-1.

## *Pistons and connecting rods, remove and refit—Operation A1-33

*(For overhaul instructions, Operation A1-34 refers)*

Workshop hand tools:
Spanner sizes: 7/16 in. AF, ½ in. AF, 5/8 in. AF, ¾ in. AF sockets
½ in. AF, 7/16 in. AF, ⅜ in. AF, 5/8 in. AF, 9/16 in. AF open end
¼ in. AF ring
5/16 in. BSF, ⅜ in. BSF open end
14 mm plug spanner
Screwdriver (medium), Pliers

Special tools:
Torque wrench

### To remove

1. Remove the bonnet panel. Operation A1-1.
2. Remove the air cleaner. Operation A1-2.
3. Remove the valve gear and rocker shaft. Operation A1-20.
4. Remove the cylinder head. Operation A1-22.
5. Remove the crankcase sump. Operation A1-28.
6. With two pistons at bottom dead centre (BDC) remove the connecting rod cap fixings.
7. Remove the caps and withdraw the connecting rod bearing halves. Retain the caps and bearings in related sets.

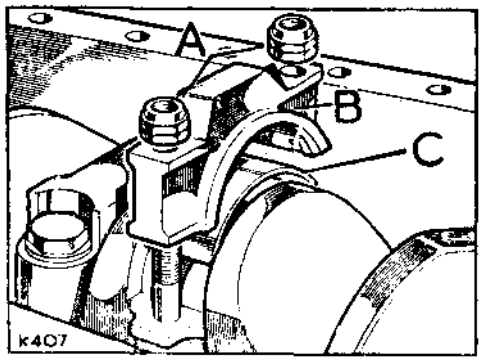


**Fig. A1-122. Connecting rod big-end details**

A—Fixings for connecting rod caps
B—Connecting rod caps
C—Connecting rod bearing lower half

8. Withdraw the pistons and attached connecting rods from the top of the bore.
9. Position the remaining pistons at BDC and repeat the removal procedure.
10. Retain the removed components in related sets.

### To refit

**Note:** If replacement components are to be fitted, the checks detailed in 'overhaul—Operation A1-34' must be carried out as necessary.

1. Position the crankshaft with two crank pins at BDC and insert the appropriate pistons and attached connecting rods (oil hole toward camshaft) into the cylinder bores, from the top of the cylinder block, using a suitable piston ring clamp.

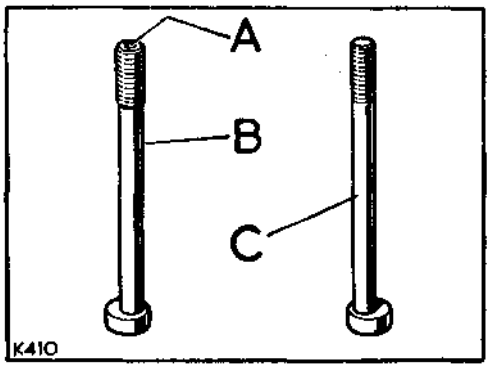


**Fig. A1-123. Identification of connecting rod fixing bolts**

A—Drilled point to identify rolled threads
B—Bolts with rolled threads
C—Bolts with machined threads

2. Lubricate the journals and bearing halves and fit the appropriate bearing halves to the connecting rods and caps.
3. Fit the connecting rod caps and new fixing nuts. Tighten the fixings to 35 lb ft (4,9 mkg) for bolts with machined threads and 25 lb ft (3,5 mkg) for bolts with rolled threads, referring to the illustration Fig. A1-123 for identification of threads.

*Operations marked with an asterisk (*) can be carried out with the engine installed in the vehicle*

## Operation A1-33—*continued*

4. Repeat the procedure to fit the remaining piston assemblies.
5. Refit the crankcase sump. Operation A1-28.
6. Refit the cylinder head. Operation A1-22.
7. Refit the valve gear and rocker shaft. Operation A1-20.
8. Set the tappet clearances as detailed in Operation A1-19.
9. Refill the engine coolant system.

**COOLANT SYSTEM**
**Bonneted Control Model, 2½ Litre Petrol**

| | Capacity | Imperial Unit | US Unit | Litres | Antifreeze | Frost Precaution |
|---|---|---|---|---|---|---|
| 88 | 18 pints | 18 pints | 21½ pints | 10,25 | 33⅓% | —25°F<br>—32°C |
| 109 | 18 pints | 18 pints | 21½ pints | 10,25 | 33⅓% | —25°F<br>—32°C |

10. Replenish the engine lubrication system.

**ENGINE LUBRICANT CAPACITY**
**Bonneted Control Model, 2½ Litre Petrol**

| | | Capacity | Imperial Unit | US Unit | Litres |
|---|---|---|---|---|---|
| 88 | Engine .... ....<br>Filter .... ...<br>Engine and Filter .... | 11 pints<br>1¼ pints<br>12¼ pints | 11 pints<br>1½ pints<br>12½ pints | 13 pints<br>1.8 pints<br>14.8 pints | 6,0<br>0,85<br>6,85 |
| 109 | Engine .... ....<br>Filter .... ....<br>Engine and Filter .... | 11 pints<br>1¼ pints<br>12¼ pints | 11 pints<br>1½ pints<br>12½ pints | 13 pints<br>1.8 pints<br>14.8 pints | 6,0<br>0,85<br>6,85 |

11. Refit the bonnet panel. Operation A1-1.

## Pistons and connecting rods, overhaul—Operation A1-34

*(For removal and refitting instructions, Operation A1-33 refers)*

Workshop hand tools:
Spanner sizes: $\frac{7}{16}$ in. AF socket
Circlip pliers, Feeler gauge

Special tools:
Torque wrench
Part No. 605238—'Plastigage' strip
Piston ring clamp

### To dismantle

**Note:** During the following procedures retain all components in related sets to facilitate subsequent assembly.

1. Remove the piston rings using suitable expanding pliers.
2. Remove circlips and withdraw gudgeon pins. Where piston crowns are marked with an 'X', withdraw the gudgeon pin toward the 'X' side. Removal of gudgeon pins is facilitated if the piston is first warmed to 55°C (131°F) approximately.

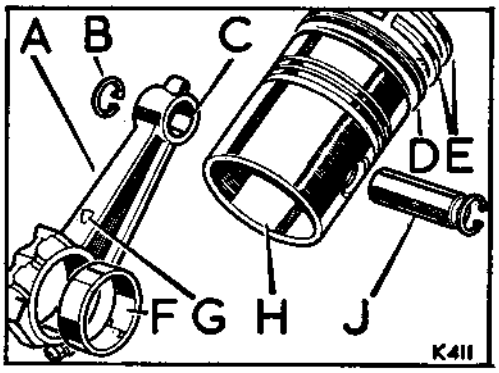


**Fig. A1-124. Exploded view of piston and connecting rod**

A—Connecting rod assembly
B—Retaining circlips for gudgeon pin
C—Connecting rod bush
D—Scraper ring
E—Compression rings
F—Bearing halves
G—Oil spray hole
H—Piston
J—Gudgeon pin

3. Clean all components and inspect for damage and general condition.

### Checking piston clearance in cylinder bore

1. Insert a long .0025 in. (0,063 mm) feeler gauge down the RH side of the cylinder bore, insert the correct piston inverted into the cylinder bore. Position the gudgeon pin bore parallel with the centre line of the engine.

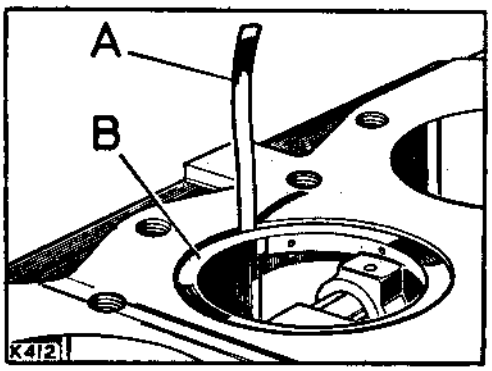


**Fig. A1-125. Checking piston clearance**

A—Feeler gauge
B—Piston in cylinder bore

2. Push the piston down the cylinder until the piston skirt reaches its tightest point in the bore. At this point withdraw the feeler gauge—a steady resistance should be felt. If necessary, select pistons from the range available until this check is satisfactory.
3. Graded pistons of standard size are available for replacement purposes. The grade letter which is stamped on the piston crown represents a diameter dimension as follows:

| Grade letter | Cylinder bore diameter |
|---|---|
| 'Z' | Nominal to plus .0002 in. (0,005 mm) above nominal. |
| 'A' | .0002 in. to .0004 in. (0,005 mm to 0,01 mm) above nominal |
| 'B' | .0004 in. to .0006 in. (0,01 mm to 0,015 mm) above nominal. |
| 'C' | .0006 in. to .0008 in. (0,015 mm to 0,02 mm) above nominal. |
| 'D' | .0008 in. to .0010 in. (0,02 mm to 0,025 mm) above nominal. |

The original grade letter of the cylinder bore will be found stamped on the cylinder block adjacent to the respective cylinder bore.

## Operation A1-34—*continued*

Where cylinder reboring is necessary, oversize pistons are available for replacement purposes. Refer to Operation A1-38 for cylinder bore overhaul details.

### Checking piston ring clearance

1. Check the piston ring gaps in the cylinder bores using a slave piston as illustrated to keep the rings square in the bore.

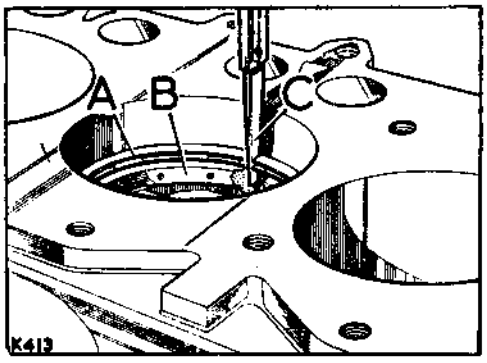


**Fig. A1-126. Checking piston ring gap**

A—Piston ring
B—Slave piston
C—Gap to be .015 in. to .020 in. (0,38 mm to 0,5 mm) for all rings

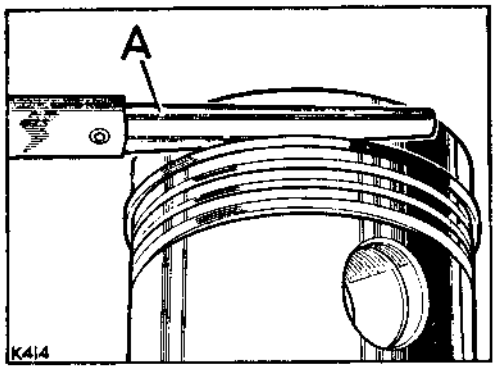


**Fig. A1-127. Checking ring clearance in groove**

A—Side clearance for compression rings to be .0018 in. to .0038 in. (0,046 mm to 0,097 mm)
Side clearance for scraper rings to be .0015 in. to .0035 in. (0,038 mm to 0,089 mm)

2. Check the piston ring clearance in the piston grooves as shown. Fit the two compression rings with the sides marked 'T' or 'Top' uppermost. The scraper ring may be fitted either way.

### Connecting rod checks

1. Measure the gudgeon pin fit in the connecting rod bush. The required fitted clearance is .0003 in. to .0005 in. (0,007 mm to 0,012 mm) giving an easy sliding fit when cold and dry. A replacement bush must be reamed when fitted to obtain this clearance. Ensure that the pre-drilled oil hole is aligned with the connecting rod oil hole when pressing in a replacement bush.
2. Check the gudgeon pin diameter relative to the piston bore. The required interference fit is zero to .0002 in. (0,005 mm).
3. Fit each connecting rod to a suitable test fixture and check for twist and malalignment.

### Connecting rod bearing cap checks

1. Select the correct cap for each connecting rod as denoted by the number stamped near the joint faces. This number also indicates the crankshaft journal to which it must be fitted.

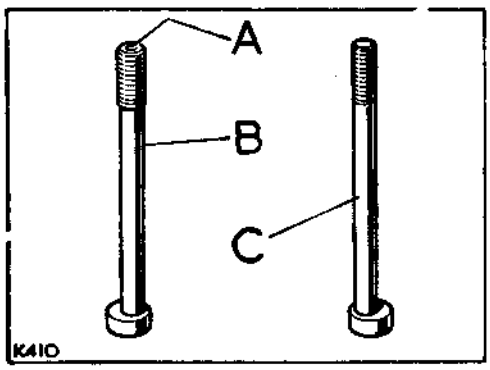


**Fig. A1-128. Connecting rod cap fixings identification**

A—Drilled point
B—Rolled threads
C—Machined threads

## Operation A1-34—*continued*

2. Assemble the caps, less bearing halves, to the respective connecting rods.
3. Tighten the fixings to 35 lb ft (4,9 mkg) for bolts with machined threads; tighten to 25 lb ft (3,5 mkg) for bolts with rolled threads, identified by a drill point at nut end.
4. Slacken off one fixing and check that there is no clearance at the joint face. If there is clearance then the assemblies must be replaced.

### Connecting rod bearing nip

1. Fit the bearing halves. Torque tighten the fixings then slacken one fixing as before and check the clearance between the joint faces. The clearance must be .002 in. to .004 in. (0,05 mm to 0,10 mm).

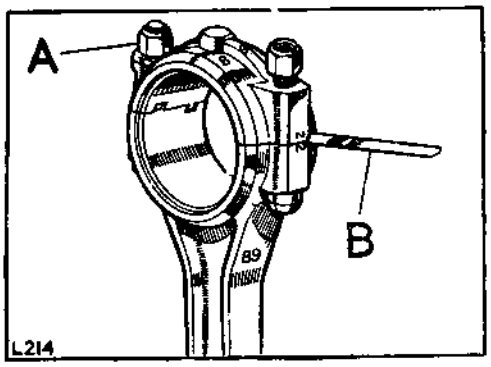


**Fig. A1-129. Checking connecting rod bearing nip**

A—Fixing, torque loaded
B—Feeler gauge

The bearing nip can be corrected by selective assembly of the bearing shells; these are available in slightly varying thicknesses. Do not file or machine the caps or connecting rods to vary the bearing nip.

2. Assemble each connecting rod assembly to its respective crankshaft journal and repeat the connecting rod bearing nip check. Again the clearance between the connecting rod and cap must be .002 in. to .004 in. (0,05 mm to 0,10 mm).

   Alternatively, use 'Plastigage' strip inserted between the connecting rod bearings and the crankshaft journals. This method will indicate the actual clearance between the bearings and the journals and must be .001 in. to .0025 in. (0,025 mm to 0,063 mm) with the fixings torque loaded as in the alternative method.

   'Plastigage' is available under Rover Part No. 605238. Remove all traces of 'Plastigage' from the components after use.

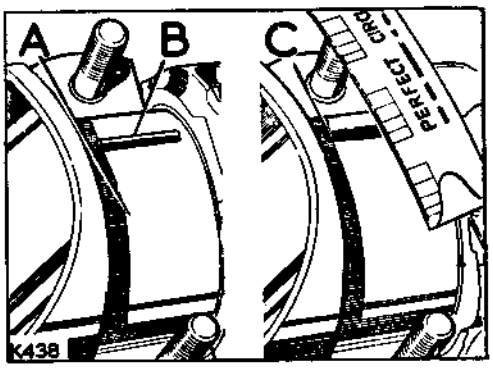


**Fig. A1-130. Checking connecting rod and bearing clearance, using 'Plastigage'**

A—Journal for connecting rod
B—Initial position of 'Plastigage'
C—Flattened 'Plastigage', do not remove until width has been measured against graduated scale on 'Plastigage' packet

3. Make a final check to prove the bearing clearance, using a .0025 in. (0,063 mm) shim paper. The connecting rod should resist rotation when the shim paper is fitted between the journal and one half of the bearing shell and move freely by hand with the shim paper removed.

### Connecting rod end-float check

1. Check the connecting rod end-float using a feeler gauge inserted between the end face of the rod and the journal shoulder.

   The end-float should be .007 in. to .011 in. (0,20 mm to 0,30 mm).

2. Remove the connecting rods from the crankshaft and retain all parts as related sets.

## Operation A1-34—*continued*

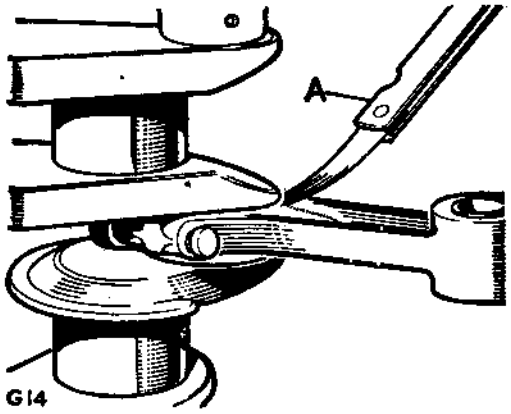


**Fig. A1-131. End-float check**

A—Feeler gauge

### To assemble

1. Assemble the pistons to the respective connecting rods. When refitted, the 'X' mark on the piston crown (where applicable) is to be toward the front of the engine, and the oil spray hole in the connecting rod toward the camshaft.
2. With the pistons warmed to approximately 55°C (132°F), fit the gudgeon pins (from the 'X' side) and retaining circlips.
3. Position the previously fitted piston rings so that the ring gaps are adjacent to the gudgeon pin bore on alternate sides of the piston and do not coincide.

## Crankshaft and main bearings, remove and refit—Operation A1-35

*(For overhaul instructions, Operation A1-36 refers)*

Workshop hand tools:

Spanner sizes: $\frac{7}{16}$ in. AF, $\frac{9}{16}$ in. AF, $\frac{13}{16}$ in. AF open end
$\frac{7}{16}$ in. AF, $\frac{1}{2}$ in. AF, $\frac{5}{8}$ in. AF, $\frac{9}{16}$ in. AF, $\frac{13}{16}$ in. AF socket
$\frac{5}{16}$ in. BSF, $\frac{7}{16}$ in. BSF open
$\frac{7}{16}$ in. BSF socket
$\frac{1}{2}$ in. AF, $\frac{9}{16}$ in. AF ring
1 lb hammer, Small chisel, Feeler gauges

Special tools:

Part No. 600963—Engine lifting sling
Part No. 270304—Guides for rear main bearing oil seal (2 off)
Part No. 605022—Clutch plate alignment gauge
Torque wrench

### To remove

1. Remove bonnet panel. Operation A1-1.
2. Remove air cleaner. Operation A1-2.
3. Remove radiator and grille panel complete. Operation A1-3.
4. Remove front floor. Operation A1-4.
5. Remove engine from vehicle. Operation A1-5.
6. Remove crankcase sump. Operation A1-28.
7. Fit the engine to a suitable stand.
8. Remove oil pump. Operation A1-29.
9. Remove engine front cover. Operation A1-25.
10. Remove timing chain and tensioner. Operation A1-26.
11. Remove clutch and flywheel. Operation A1-31.
12. Remove flywheel housing. Operation A1-32.
13. Remove the connecting rod caps and bearing lower halves. Retain as related sets.

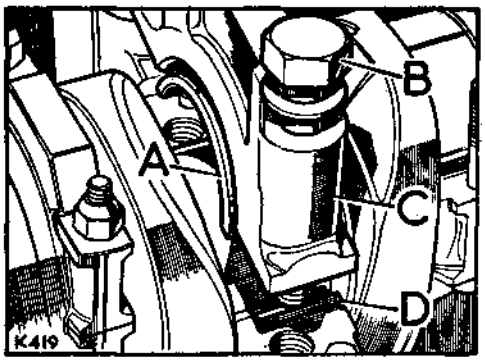


**Fig. A1-132. Crankshaft main bearing caps**

A—Bearing lower half
B—Fixings, bearing caps to cylinder block
C—Bearing cap
D—Thrust washer positioned each side of centre bearing upper half

14. Remove the main bearing caps and lift crankshaft clear. Retain the bearing halves and caps in related sets.
15. Remove the oil seal from the crankshaft.
16. Remove the seal retainer halves, Fig. A1-133 refers.

### To refit

1. Where replacement components are to be fitted, the relevant checks detailed in Operation A1-36 must be carried out.
2. Assemble the crankshaft to the engine and insert the bearing upper halves, located by tongues, to the crankcase.
3. Position a thrust washer at each side of the centre bearing shell. The thrust washer thicknesses must agree within .003 in. (0,07 mm).
4. Position the bearing lower halves on to the front and centre bearing caps and fit the caps.
5. Assemble the garter spring on the oil seal journal of the crankshaft as illustrated, by laying the spring around the journal, this will bring the two ends, the hook and the eye, adjacent to one another, then insert the hook into the eye. Care must be taken to ensure that during this operation the spring is not stretched at all.

   The spring should be moved along the journal until it is against the thrower flange.
6. Apply Silicone Grease MS4 to the crankshaft oil seal journal and to both sides of the split oil seal sealing lip.

   Open the split sufficiently to allow it to be fitted over the crankshaft oil seal journal. Recess in oil seal must be towards thrower flange and garter spring.

   The oil seal must not be repeatedly fitted and removed from the crankshaft, as this can damage the sealing lip.

## Operation A1-35—*continued*

7. Rotate the oil seal until the split is on the vertical axis pointing towards the cylinder head and in its approximate running position on the journal; this position is important.

   Apply Hylomar SQ32M sealing compound to the seal diameter of the two half plates, using either an applicator or a brush.

**Important:** Do not degrease the half seal plates with trichlorethylene, but wipe clean with a dry cloth prior to applying the Hylomar.

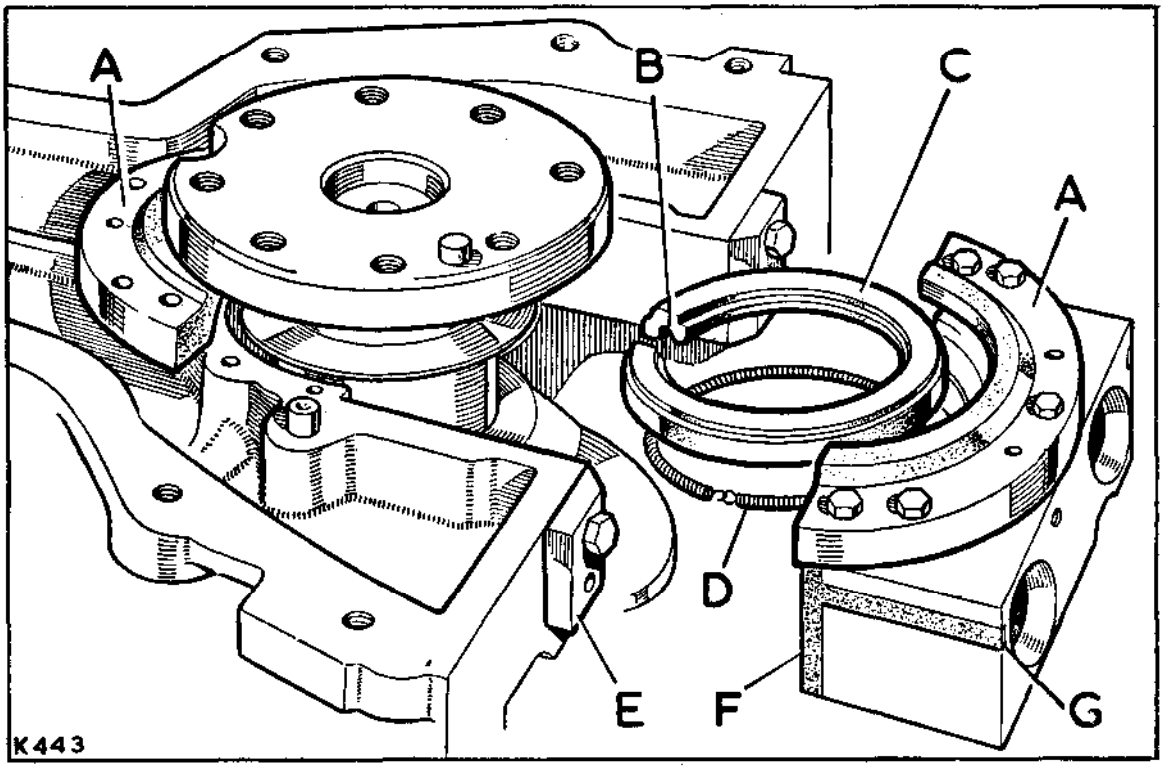


**Fig. A1-133. Oil seal details**

A—Retainer halves
B—Split line of seal to be towards top of engine when fitted
C—Split oil seal
D—Garter spring, hook and eye to be midway between split and hinge of oil seal when fitted
E—Guides, Part No. 270304, for rear main bearing cap 'T' seals
F—Trim these edges before fitting cap to prevent seal from folding
G—Trim these ends when cap is fitted to allow $\frac{1}{32}$ in. (0,8 mm) protrusion

## Operation A1-35—*continued*

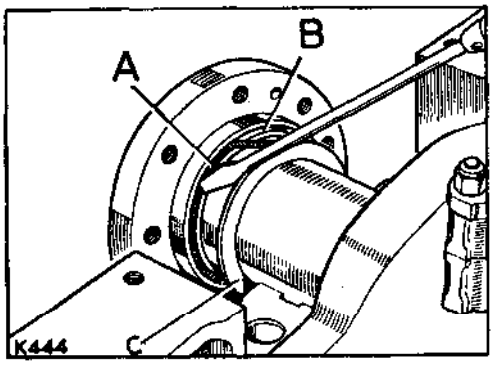


**Fig. A1-134. Fitting garter spring**

A—Garter spring
B—Oil seal recess for garter spring
C—Thrower flange

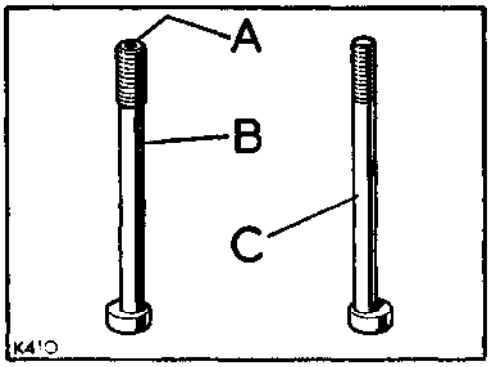


**Fig. A1-135. Identification of connecting rod bolts**

A—Drilled point to identify rolled threads
B—Bolts with rolled threads
C—Bolts with machined threads

8. Fit one half of the oil seal retainer on to the crankcase dowels. The oil seal should be compressed to assist assembly, also ensure that it is correctly located in the retainer recess. Bolt the retainer to the crankcase, leaving the two bolts adjacent to the split line finger-tight, fully tighten the remaining three bolts. In order to fit the bolt it will be necessary to rotate the crankshaft; it is essential to hold the seal so that it does not rotate with the crankshaft.
9. Bolt the other half of the oil seal retainer on to the main bearing cap, in the same way. Apply Silicone grease MS4 to the 'T' seals and fit them to the main bearing cap. The cap must be off the crankcase for these operations.

   Trim the edges of the 'T' seals as shown to prevent them from fouling the cylinder block when fitted.
10. Fit the main bearing cap with the seal retainer, bearing shell and 'T' seals to the crankcase, until there is a $\frac{1}{32}$ in. (0,8 mm) gap between the cap and crankcase.
11. Ensure that the seal is located in the retainer recess.
12. Pull down the cap slowly, ensuring there is no buckling of the split seal or misalignment of the butt joint.
13. Tighten all the bearing cap fixings to a torque loading of 85 lb ft (11,75 mkg).
14. Fit the appropriate bearing shells to the connecting rod caps, ensure that the upper and lower shells are correctly located by their tongues and fit the caps to the appropriate connecting rods. Use new fixing nuts and tighten the fixings to 35 lb ft (4,9 mkg) for bolts with machined threads and 25 lb ft (3,5 mkg) for bolts with rolled threads, referring to Fig. A1-135 for identification.
15. Refit the flywheel housing. Operation A1-32.
16. Refit the clutch and flywheel. Operation A1-31.
17. Refit the timing chain and tensioner. Operation A1-26.
18. Carry out the valve timing procedure as detailed in Operation A1-27.
19. Refit the engine front cover. Operation A1-25.

## Operation A1-35—*continued*

20. Refit the oil pump. Operation A1-29.
21. Remove the engine from the stand, using suitable lifting equipment.
22. Refit the crankcase sump. Operation A1-28.
23. Refit engine to vehicle. Operation A1-5.
24. Refit front floor. Operation A1-4.
25. Refit the radiator and grille panel. Operation A1-3
26. Refit the air cleaner. Operation A1-2.
27. Refit the bonnet panel. Operation A1-1.

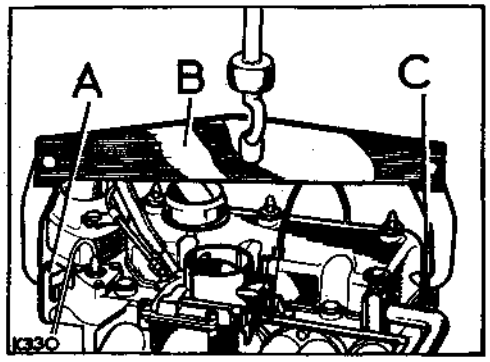


**Fig. A1-136. Engine lifting sling in position**

A—Front lifting bracket
B—Lifting sling, Part No. 600963
C—Rear lifting bracket

## Crankshaft and main bearings, overhaul—Operation A1-36

*(For removal and refitting details, Operation A1-35 refers)*

Workshop hand tools:
Spanner sizes: $\frac{7}{16}$ in. AF open end
$\frac{13}{16}$ in. AF socket
Screwdriver (medium), Screwdriver (small)
Feeler gauges

Special tools:
Torque wrench
Dial test indicator
Part No. 605238—'Plastigage' strip

### To overhaul

1. Inspect all components for damage and general condition.
2. The crankshaft journals should be closely inspected for wear or damage, and the crankpins also checked for ovality.
3. Check for general condition of main bearing cap locating dowels, dowel spigots and surrounding areas.

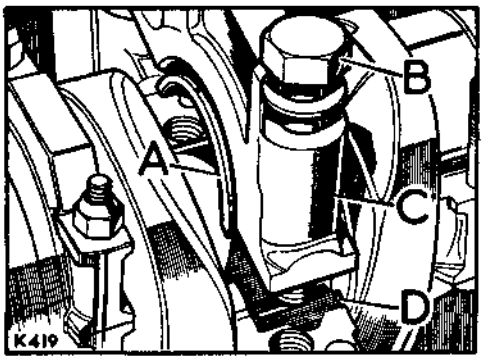


**Fig. A1-137. Main bearing cap location details**

A—Bearing lower half
B—Fixings, bearing cap to cylinder block
C—Bearing cap
D—Thrust washer at each side of centre bearing upper half

4. With the crankshaft removed, check the main bearings for fit in the housings, as follows: fit the front bearing cap, less the shell bearings, to the correct location.
5. Fit and tighten the main bearing bolts to 85 lb ft (11,75 mkg).
6. Slacken one bolt and check that there is no clearance between the two faces. Clearance here indicates that the cap has been filed or is damaged and it will be necessary to replace the complete cylinder block.
7. If satisfactory, fit the main bearings and repeat the above check. The clearance at the face should now be .004 in to .006 in. (0,10 mm to 0,15 mm) and is achieved by selective assembly of the shells.

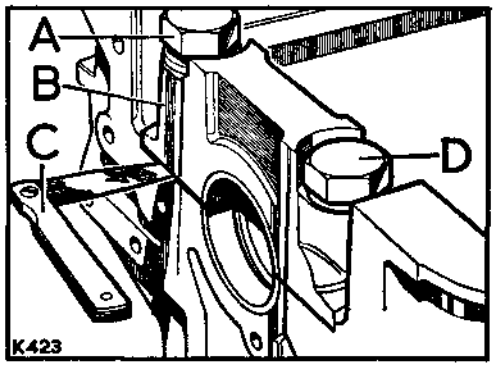


**Fig. A1-138. Checking main bearing nip**

A—Set bolt, slack
B—Main bearing cap
C—Feeler gauge
D—Set bolt, tightened

8. Repeat the procedure and check the remaining bearings and caps.
9. When the bearing nip has been checked, remove the caps and bearing shell bottom halves. Position a standard size thrust washer at each side of centre bearing shell—top half, and fit the crankshaft.
   The thrust washer thicknesses must agree within .003 in. (0,08 mm).
10. Mount a dial test indicator, then check and note the crankshaft end-float reading which should be .002 in. to .006 in. (0,05 mm to 0,15 mm).
    If the crankshaft end-float reading obtained is not within the limits, fit suitable oversize thruss washers. The variation of thrust washer thicknest at each side must not exceed .003 in. (0,08 mm) to ensure that the crankshaft remains centralised.
11. When satisfactory, check the crankshaft for freedom of rotation. Fitting a .0025 in. (0,06 mm) feeler paper between a main bearing and the journal should cause resistance to rotation; the crankshaft should be free to rotate by hand with the feeler paper removed.

## Operation A1-36—*continued*

12. The running clearance between the bearings and the crankshaft journals should be .001 in. to .0025 in. (0,02 mm to 0,06 mm). An alternative method of checking the clearance is by using 'Plastigage' strip, available under Rover Part No. 605238, as illustrated.

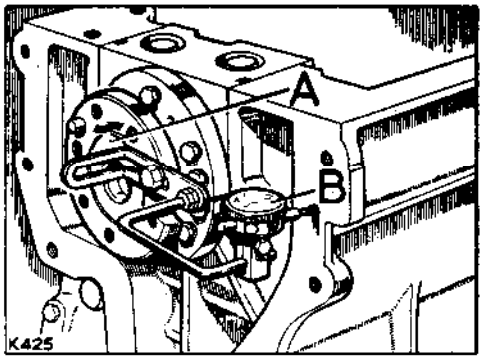


**Fig. A1-139. Checking crankshaft end-float**

A—Lever crankshaft fully forward then fully to rear
B—Dial test indicator

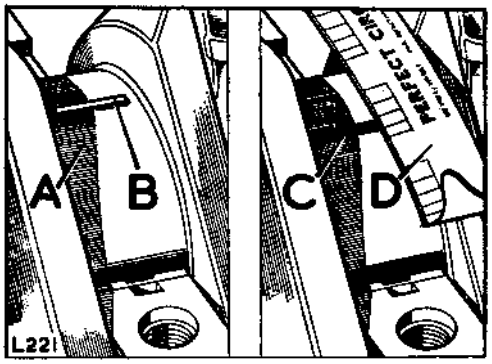


**Fig. A1-140. Use of 'Plastigage' strip to measure bearing clearance**

A—Main bearing journal
B—Initial position of 'Plastigage'
C—Flattened 'Plastigage', do not remove until measured against scale
D—Graduated scale on 'Plastigage' packet

## *Camshaft, remove and refit—Operation A1-37

*(For camshaft bearing overhaul information, Operation A1-38 refers)*

Workshop hand tools:
Spanner sizes: ½ in. x 7/16 in. AF (2 off) ⅜ in. AF open end
¼ in. AF, ⅜ in. AF, ½ in. AF socket
½ in. AF ring
3/16 in. BSF, ⅜ in. BSF open
2 BA open end
Screwdriver (small), Screwdriver (medium), Pliers (snipe nose), Feeler gauges

Special tools:
Part No. 530102—Spanner for starter dog
Torque wrench
Part No. 507231—Extractor for camshaft chainwheel
12 v test lamp
Part No. 530101—Extractor for tappet guides and camshaft

**To remove**

1. Remove bonnet panel. Operation A1-1.
2. Remove air cleaner. Operation A1-2.
3. Remove radiator and grille panel. Operation A1-3.
4. Remove the external oil filter. Operation A1-16.
5. Remove the distributor and drive gear. Operation A1-18.
6. Remove valve gear and rocker shaft assembly. Operation A1-20.
7. Remove cylinder head. Operation A1-22.
8. Remove engine front cover. Operation A1-25.
9. Remove timing chain tensioner. Operation A1-26.
10. Remove tappet locating bolts at RH side of engine block. Do not remove tappet guide at this stage.
11. Remove the tappet slides leaving the guides in position to retain the tappet rollers and ensure that they do not fall behind the camshaft. Remove the rollers, using a local made spring clip.
12. Remove the tappet guides. The use of special tool, Part No. 530101 as illustrated, will facilitate this procedure if the guides are difficult to remove by hand.

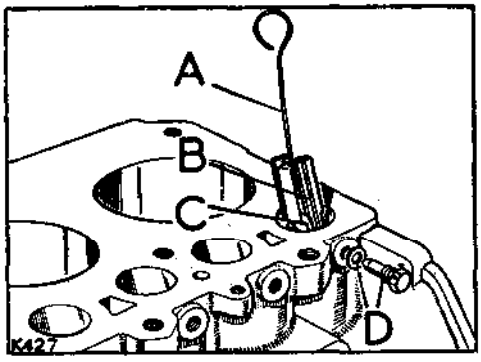


**Fig. A1-141. Removing tappets and rollers**

A—Spring clip
B—Tappet slide
C—Tappet roller
D—Tappet guide locating bolt

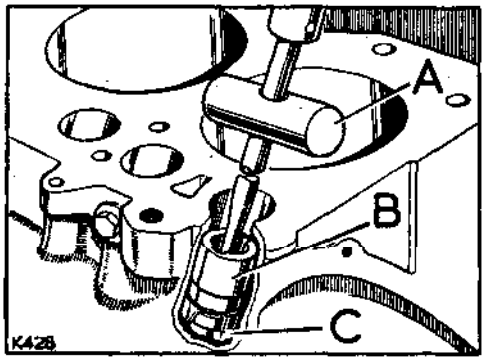


**Fig. A1-142. Removing tappet guides**

A—Special tool, Part No. 530101
B—Tappet guide
C—Extractor adaptor, part of special tool, Part No. 530101

*Operations marked with an asterisk (*) can be carried out with the engine installed in the vehicle*

## Operation A1-37—*continued*

13. Withdraw the distributor drive shaft then remove the locating grub screw and withdraw the vertical drive shaft gear.

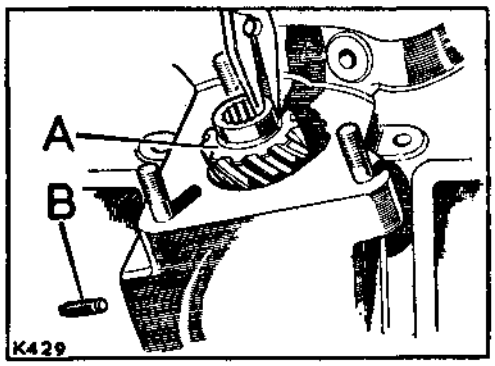


**Fig. A1-143. Removing the vertical drive shaft gear**

A—Vertical drive shaft gear
B—Locating grub screw in external oil filter joint face

14. Withdraw the timing chain and remove the camshaft chainwheel.

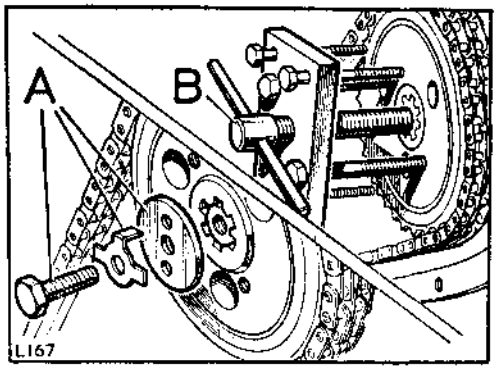


**Fig. A1-144. Camshaft chainwheel**

A—Fixings, chainwheel to camshaft
B—Use of special extractor, Part No. 507231 facilitates chainwheel removal

15. Remove the thrust plate and withdraw the camshaft, using special tool, Part No. 530101 or a slave bolt.

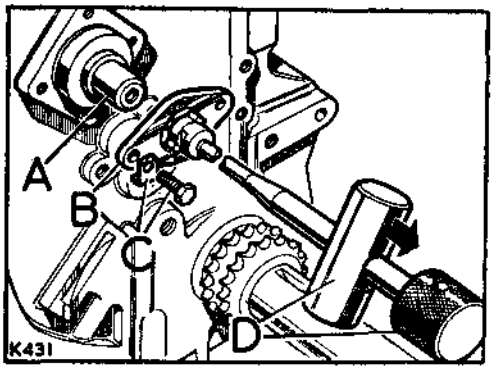


**Fig. A1-145. Removing the camshaft**

A—Camshaft
B—Thrust plate
C—Fixings, thrust plate to cylinder block
D—Special tool, Part No. 530101 in position

**Note:** Camshaft bearing removing, refitting and overhaul details are included in 'Cylinder block overhaul, Operation A1-38' as a reaming procedure is required with the engine removed.

### To refit

1. Insert the camshaft, keyed end to front of engine, and fit the thrust plate. Do not lock the fixings at this stage.
2. Fit the chainwheel to the camshaft and check the camshaft end-float which must be .0025 in. to .0055 in. (0,06 mm to 0,13 mm).

## Operation A1-37—*continued*

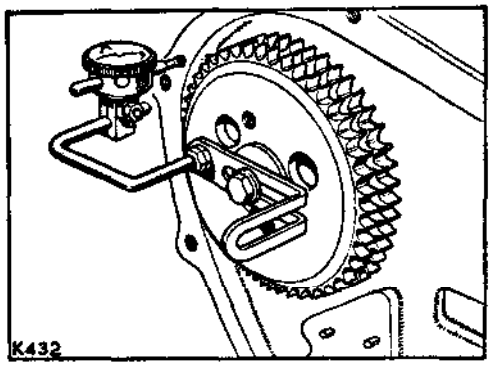


**Fig. A1-146. Camshaft end-float check**

The end-float is adjusted by thrust plate selection.

3. When satisfactory, remove the chainwheel and lock the thrust plate fixings with the lock tabs. Refit the camshaft chainwheel, Fig. A1-145 refers.
4. Refit the tappets assemblies, see Figs. A1-142 and A1-141.
5. Refit the cylinder head. Operation A1-22.
6. Refit the valve gear and rocker shaft assembly. Operation A1-20.
7. Carry out the valve timing procedure. Operation A1-27, and refit the timing chain.
8. Refit the timing chain tensioner. Operation A1-26.
9. Refit the engine front cover. Operation A1-25.
10. Set the tappet clearances. Operation A1-19.
11. Refit the distributor and drive gear. Operation A1-18.
12. Set the ignition timing. Operation A1-17.
13. Refit the radiator and grille panel assembly. Operation A1-3.
14. Refit the air cleaner. Operation A1-2.
15. Replenish the engine lubricating oil.

**ENGINE LUBRICANT CAPACITY**
**Bonneted Control Model, 2¼ Litre Petrol**

| | | Capacity | Imperial Unit | US Unit | Litres |
|---|---|---|---|---|---|
| 88 | Engine | 11 pints | 11 pints | 13 pints | 6,0 |
| | Filter | 1½ pints | 1½ pints | 1.8 pints | 0,85 |
| | Engine and Filter | 12½ pints | 12½ pints | 14.8 pints | 6,85 |
| 109 | Engine | 11 pints | 11 pints | 13 pints | 6,0 |
| | Filter | 1½ pints | 1½ pints | 1.8 pints | 0,85 |
| | Engine and Filter | 12½ pints | 12½ pints | 14.8 pints | 6,85 |

16. Refit the bonnet panel. Operation A1-1.

## Cylinder block and camshaft bearings, overhaul—Operation A1-38

Workshop hand tools:
Screwdriver (medium)
Mallet (hide faced)
Spanner size: $\frac{7}{16}$ in. AF open end

Special tools:
Part No. 274394—Guide plug
Part No. 274389—Reamer for bearings
**Method 'A'**
Part No. 274388—Bearing drift
Part No. 274385—Guide tube for front bearings
Part No. 274382—Bearing fitting bar
Part No. 274383—Spacer
Part No. 274384—Spigot
Part No. 274386—Guide tool for rear bearings
Part No. 531760—Adaptor
**Method 'B'**
Part No. 274388—Bearing drift
Part No. 531760—Adaptor
or:
Part No. 605975—Bearing drift and adaptor complete

Carry out the engine removal and dismantling work previously detailed as necessary until only the camshaft bearings remain in the cylinder block.

### Camshaft bearings, to replace

**Note:** Two methods of replacing the bearings are detailed. Use Method 'A' if the full range of special tools is held; Method 'B' uses a simplified tooling procedure.

### Method 'A', to replace bearings

1. When new camshaft bearings are to be fitted, the front and front intermediate bearings must be removed and new ones fitted **before** removing the rear bearings.
2. Unscrew the 3½ in. (88 mm) long stud from the joint face at front of cylinder block and remove the bearing cover at rear of cylinder block.

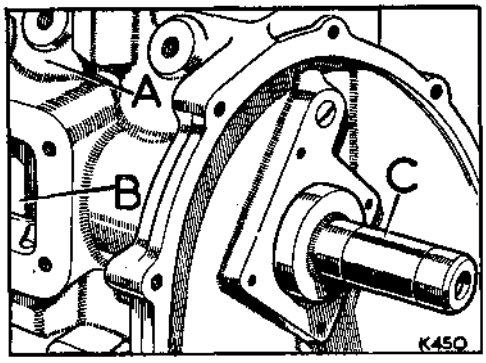


**Fig. A1-147. Driving out the front bearings**
A—Cylinder block
B—Front tappet chamber
C—Special tool, Part No. 274388

3. Drive out the front and front intermediate bearings, using special tool, Part No. 274388.
4. Withdraw the front bearing from the vacant front side cover aperture. Collapse the front intermediate bearing and withdraw from the distributor drive chamber.
5. Fit new front and front intermediate bearings, **before** removing the rear bearings with drift.

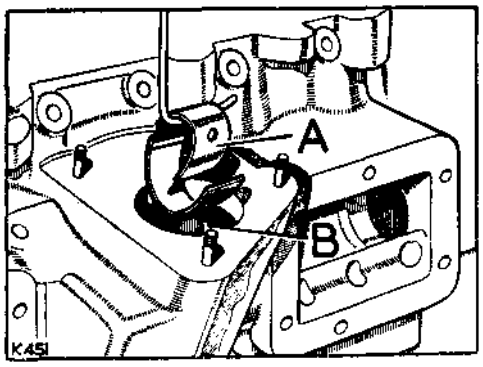


**Fig. A1-148. Front intermediate bearing removal**
A—Collapsed bearing
B—Distributor drive chamber

6. Fit a guide tool, Part No. 274385, into the two **old** rearmost bearings with the part of flange marked 'TOP' uppermost, then insert end cover set bolts loosely for location purposes. Position a new front bearing on to the handle end of bearing fitting bar, Part No. 274382, and locate by means of the peg and semi-circular cut-out, then slide a spacer, Part No. 274383, on to the fitting bar and engage the locating shoulder.

**Note:** The front bearing is wider and has an extra oil drilling.

## Operation A1-38—*continued*

7. Place a new bearing on spigot, Part No. 274384, and position it inside the foremost tappet chamber with the bearing nearest the front intermediate housing.

8. Insert the bearing fitting bar into the front bearing housing and feed the spigot on to the bar; withdraw the spigot handle. Turn the spigot to engage the locating shoulder in the spacer, then press the fitting bar inward, turning as necessary to engage the bar slot with the peg in guide tube.

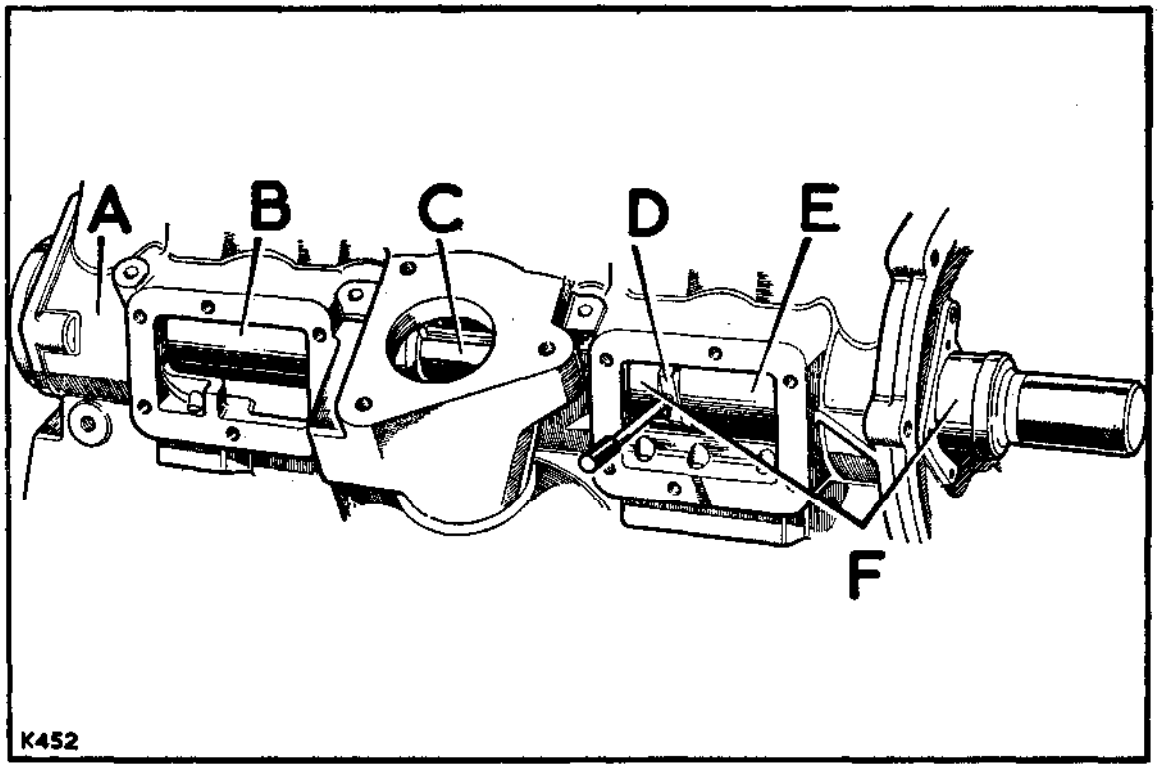


**Fig. A1-149. Fitting camshaft front bearings**

A—Cylinder block
B—Guide tube
C—Bearing fitting bar
D—Spigot
E—Spacer
F—New bearings

## Operation A1-38—*continued*

9. When the fitting bar has been pressed in as far as possible by hand, ensure that all locating points are properly engaged, then drive the bearings into position with a hide-faced hammer.

10. The bearings must now be aligned with the oil holes, proceed as follows:

    Partially withdraw bearing fitting bar and remove spigot, Part No. 274384. Slide adaptor, Part No. 531760, on to bar and re-insert bar and drive in until flange of bar abuts on cylinder block. This will align the oil holes on the intermediate bearing.

    Withdraw bar and adaptor and remove spacer, then refit adaptor, Part No. 531760, and align front bearing oil holes by gently tapping tool as required.

11. Remove the bearing fitting tools and check the oil holes for alignment.

12. Remove the two rearmost bearings and fit new camshaft **rear** bearings in the same manner as for front bearings, but remove the spacer from fitting bar and use guide tool, Part No. 274386, instead of the guide tube used when fitting front bearings.

### Method 'B', to replace bearings

1. Using special tool, Part No. 274388, or Part No. 605975 (less the adaptor), drift out all the bearings. The two centre bearings can be drifted into the distributor drive chamber and collapsed to enable withdrawal.

   Note that the two centre and the rear bearing are of the same width, whereas the front bearing is wider and has an additional oil feed hole.

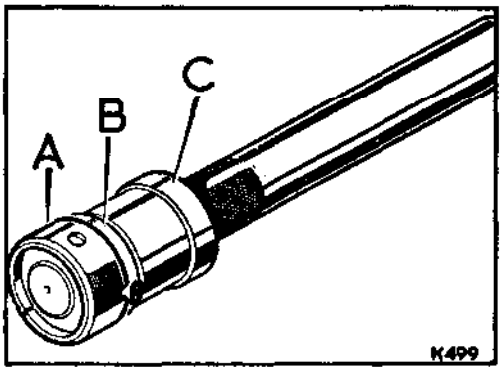


**Fig. A1-150. Replacing camshaft bearings**
A—Camshaft bearing
B—Adaptor
C—Drift, Part No. 274388 or Part No. 605975

2. To fit the new bearings, the drift, Part No. 274388 and special adaptor, Part No. 531760 or the drift and adaptor complete, Part No. 605975 are required. Proceed as follows:

   (a) With the cylinder block vertical, rear face down, place a new shell bearing into the front camshaft chamber and position it so that it is above the second bearing housing, counting from the front of the block. The chamfer on the bearing edge must be towards the housing bore, and the oil hole in the bearing must be aligned with the innermost oil feed drilling in the housing bore. Accuracy is essential otherwise misalignment of the oil holes may result and once the bearing is in place it cannot be rotated to correct any error. Pencil marks on the bearing outer diameter and the cylinder block adjacent to the housing will assist in checking alignment.

## Operation A1-38—*continued*

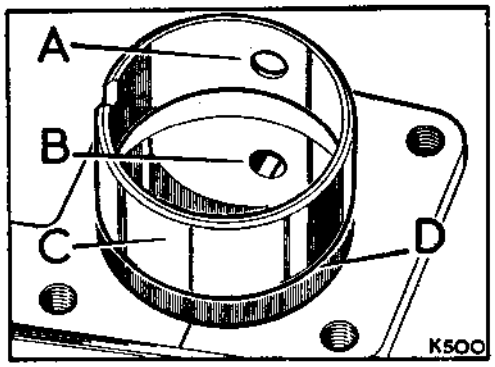


**Fig. A1-151. Aligning oil holes**

A—Oil hole in bearing
B—Oil feed hole in block
C—Pencil marks
D—Chamfer on leading edge

(b) Having visually aligned the bearing, carefully place inside it the special adaptor, Part No. 531760 or Part No. 605975.

(c) Maintain the bearing in a level position. Pass the drift through the front bearing housing into the camshaft chamber so that it rests on top of the adaptor. Commence drifting the bearing into the block. Ensure that the bearing is not drifted in too far, and that the oil feed holes are correctly aligned.

3. Repeat the operation for the front bearing. Note that the front bearing is wider and has a small hole in addition to the large oil feed hole. This small hole aligns with a vertical drilling in the block, which in turn feeds a horizontal drilling for the tappet mechanism. Drift this bearing in so that the outer edge is just below the machined surface of the front face. This is to ensure that when the camshaft thrust plate is fitted it will not stand proud on the bearing edge.

4. Turn over the cylinder block so that the rear face is uppermost, and drift in the two remaining narrow bearings in the manner described in para. 2.

5. Retain the cylinder block in the vertical position, front face downwards, in readiness for the reamering operation.

### Reamering the bearings

1. Locate a guide plug, Part No. 274394, in the new front camshaft bearing and locate, using the end-plate screws. Do not tighten these screws until the reamer, Part No. 274389, is put into position and the guide collar immediately in front of the cutter is entered into the rearmost bearing, which is first to be cut. This precaution is to ensure correct alignment of the reamer. Before commencing the reamering operation it is necessary to turn the engine block to a vertical position, front end facing downwards, in order that the weight of the reamer will assist in the cutting operation. As each bearing is cut the reamer should be held steady by the operator whilst an assistant, using a high pressure airline, blows away the white metal cuttings, before allowing the reamer to enter the next bearing.

2. After the rearmost and the two intermediate bearings have been cut, remove the guide plug, Part No. 274394, before cutting the foremost bearing. Remove the reamer handle and bolt, and carefully remove the reamer, turning it in the same direction as for cutting. Care must be taken

## Operation A1-38—*continued*

to prevent the reamer damaging the foremost bearing as the reamer is removed.

No lubricant is necessary for the reamering operation, best results are obtained when the bearings are cut dry.

3. Remove the plugs from the ends of oil gallery passage and clean the gallery and oil feed passages to camshaft and crankshaft bearings, using compressed air. Refit the plugs and lock in position. The hexagon-headed plugs at the rear of the block should have new washers fitted, and their threads coated with a suitable jointing compound.

**The cylinder block must be thoroughly cleaned at this stage.**

### Cylinder bores

1. The bores may be reclaimed by machining up to .040 in. (1,0 mm) maximum oversize, replacement pistons being available in oversize increments of

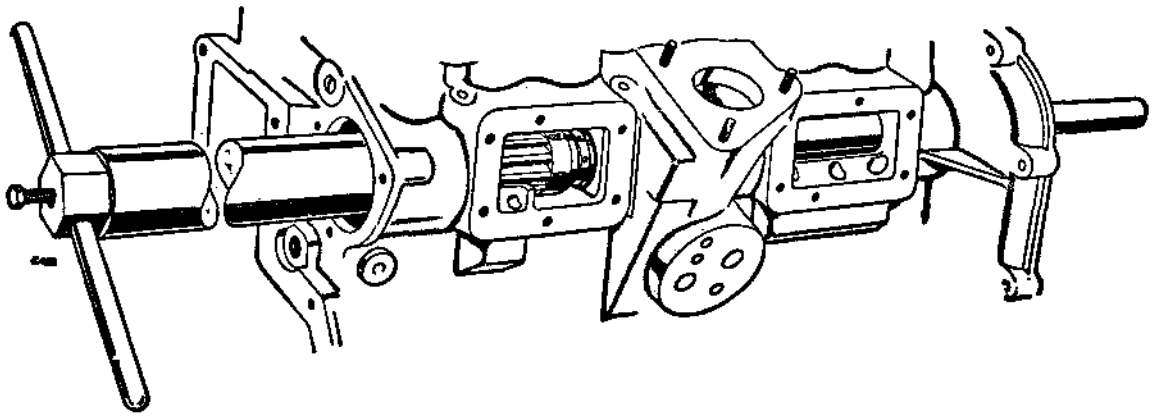

**Fig. A1-152. Reamering camshaft bearings. (Engine must be in vertical position)**

## Operation A1-38—*continued*

.010 in., .020 in., .030 in. and .040 in. (0,25 mm, 0,5 mm, 0,76 mm and 1,0 mm).

2. Where the maximum permitted boring tolerance is not sufficient to reclaim the bores, cylinder liners may be fitted.

3. Fitting the cylinder liners conforms to normal practice. Machine the cylinder block bores to 3.7175 in. +.0005 in. (94,4245 mm +0,0127 mm). This will provide the liner with a .003 in. to .0045 in. (0,0762 mm to 0,1143 mm) interference fit.

4. Press the liners into the cylinder block. The liners must not be proud of, or more than .010 in. (0,254 mm) below, the top face of the cylinder block. Cylinder liners should then be bored out to standard size, that is 3.562 in. (90,47 mm). Liners may be rebored .010 in. (0,254 mm) oversize.

5. Before reassembly, deglaze the cylinder bores using suitable honing equipment or suitable fine grade abrasive cloth.

When the overhaul is completed, rebuild the engine by reversing the removal procedure. In addition, carry out the following procedures at the appropriate stage of rebuild:

Valve timing procedure. Operation A1-27.
Tappet adjustment. Operation A1-19.
Ignition timing procedure. Operation A1-17.

Also replenish the engine lubrication system and engine coolant system.

## Reclamation of flywheel and starter ring—Operation A1-39

*(For Flywheel remove and refit Instructions, Operation A1-31 refers)*

### Wear or scoring on the flywheel pressure face

1. Remove the clutch bolts and dowels from the flywheel.
2. Check the thickness of the flywheel before commencing machining, as it may have been previously machined.

   The maximum amount of metal which may be removed from the flywheel face is .030 in. (0,76 mm). If the face is not satisfactory after machining to these limits, the flywheel must be scrapped. See chart below.

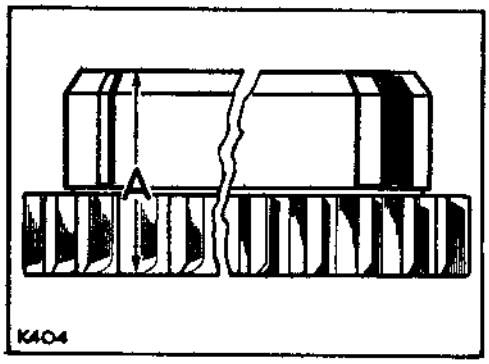


**Fig. A1-153. Machining flywheel**

A—Minimum thickness after refacing

3. Machine the **whole** pressure face, not merely inside the bolts and dowels, until the score marks are removed.

### Starter ring excessively worn or damaged

#### Petrol models

1. Remove the scrap starter ring by securing the flywheel in a vice fitted with jaw protectors, then drill a $\frac{3}{16}$ in. (4 mm) diameter hole axially between the root of any one tooth and the inner diameter of the starter ring sufficiently deep to weaken the ring. Care must be taken to prevent the drill entering the flywheel.

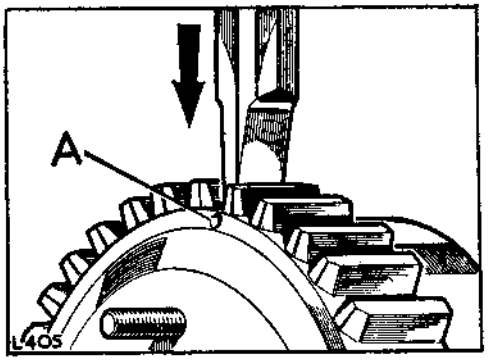


**Fig. A1-154. Removing an unserviceable starter ring**

A—Drilled hole

| Models | Flywheel Part Number | Ring Gear Part Number | Dimension 'A' Minimum thickness after refacing | Flywheel Part Number when re-conditioned | Remarks |
|---|---|---|---|---|---|
| Series II and IIA 2¼ litre Petrol models up to engine suffix 'E'. (Two dowel hole type) | 247991 (Can be replaced by 600243) | 506799 | 1.373 in. (35.0 mm) | 530514 (Can be replaced by 600540) | Cast-iron flywheel. Detachable ring gear fitted as original equipment. No machining necessary other than for refacing. |
| Series IIA 2¼ litre Petrol models. Engine suffix 'F' onwards. (Four dowel hole type) | 600243 (Will replace 247991 and 536882) | 506799 | 1.373 in. (35.0 mm) | 600540 (Will replace 530514 and 600244) | Cast-iron flywheel. Detachable ring gear fitted as original equipment. No machining necessary other than for refacing. Dowels are not fitted, but are supplied loose so that they may be assembled to suit the type of clutch fitted. |

## Operation A1-39—*continued*

2. Place a chisel immediately above the drilled hole, and strike it sharply.

   **Important:** The starter ring will normally split harmlessly but on remote occasions rings have been known to fly asunder when split; it is therefore important that the operator should take suitable precautions. For instance, a cloth may be laid over the upper part of the starter ring.

3. Heat the starter ring uniformly to between 220°C and 225°C but do not exceed the higher temperature.

4. With the flywheel placed on a suitably flat surface, position the ring on to the flywheel with the square edge of the teeth against the flange.

   There should be a clearance of $\frac{1}{16}$ in. to $\frac{1}{8}$ in. (1,5 mm to 3 mm) between the inner diameter of ring and flywheel if the temperature is correct. Press the starter ring firmly against the flange until the ring contracts sufficiently to grip the flywheel.

5. Allow the flywheel assembly to cool gradually; do not hasten cooling in any way and thereby avoid the setting up of internal stresses in the ring which may cause fracture or failure in some respect.

# Fault diagnosis—Engine, 2¼ litre Petrol

| Symptom | Possible cause | Investigation | Remedy |
|---|---|---|---|
| **A—Engine fails to rotate when attempting to start** | Incorrect starting procedure | Follow procedure as described in Owner's Instruction Manual | |
| | Battery leads loose or terminals corroded | Check for condition of leads and terminals | Clean and tighten as necessary |
| | Battery discharged | Check and remedy as described in Section N | |
| | Starter solenoid malfunction | Link battery feed to starter feed thus by-passing solenoid | |
| | Starter motor inoperative | If lights dim when starter switch is operated, the starter pinion may be jammed in the flywheel starter ring | Free the starter by removing the protection cap and, turning the squared end of the starter armature clockwise |
| | | Check for loose or dirty connections and for soundness of leads | Clean and tighten at terminals. Replace leads as necessary |
| | | Depress switch on engine compartment dash panel to connect battery feed to starter | If starter then rotates engine, replace the ignition switch. If starter remains inoperative, refer to Section N |
| **B—Engine rotates but fails to start** | Starter motor speed too low | Check battery leads at terminals | Clean and tighten as necessary |
| | | Check state of battery charge, Section N | When refitting a recharged or replacement battery, check the voltage regulator output setting, Section N. Check also the fan belt tension |
| | Faulty ignition system | Remove a sparking plug lead and hold lead end ¼ in. (6 mm) approximately from engine block. With ignition 'ON', depress starter solenoid switch and check that an easily visible blue spark jumps the gap between plug lead and engine | If no spark or if spark is weak or yellowish, check the ignition system as described in Section N |
| | | If the spark appears adequate, remove the sparking plugs | Clean the plugs and reset the plug gaps, Section N. Replace if necessary |
| | Fuel system defects | With the engine cold, remove fuel inlet pipe at carburetter, operate priming lever at pump and check for full bore fuel flow | If fuel flow is unsatisfactory, refer to Section L |
| | | If flow is satisfactory, ensure that carburetter float chamber fuel level is satisfactory | If float chamber level is too low, refer to Section L for carburetter float needle checks |
| | Incorrect 'hot spot' adjustment | This setting if incorrect may prevent the engine from starting when hot, due to excessive vapourising of fuel in manifold | Reset 'hot spot' components with engine cold. Ensure bimetal spring is in good condition, replace if necessary |
| **C—Engine starts but immediately stops** | Faulty electrical connections | Check ignition circuits, leads and terminals for possible loose or defective connections as described in Section N | |
| | Insufficient fuel supply | Carry out the checks and remedies listed under 'Fuel system defects', paragraph B | |

## Fault diagnosis—Engine—2¼ litre Petrol—*continued*

| Symptom | Possible cause | Investigation | Remedy |
|---|---|---|---|
| **D—Engine fails to idle** | Carburetter setting faulty | Adjust throttle stop screw on carburetter until engine will run with screw on stop. If engine idle speed is then too high, check the carburetter settings as described in Section L | |
| | Faulty fuel pump | Carry out the checks and remedies listed under 'Fuel system defects', paragraph B | |
| | Ignition system faults | Check electrical leads insulation and terminal connections | Clean and tighten terminals. Replace leads if necessary |
| | | Carry out the checks listed under 'Faulty ignition system', paragraph B, to check the sparking plugs and their electrical feed | |
| | Battery charge too low | Check if lamps brightness varies with engine speed | Carry out the checks listed under 'Battery discharged' Section N |
| | | Check fan belt tension setting, Section A1 | Reset to correct tension and recharge battery from external supply or by a long period of engine running in daylight |
| | Incorrect ignition timing | Adjust throttle stop screw on carburetter until engine will idle without stopping. Rotate vernier adjuster on distributor through advance and retard range. If the engine speed increases at a new vernier position, then the original ignition setting is incorrect for the fuel grade in use | Reset ignition timing to the correct setting for the fuel grade in use |
| | Valve operation defective | Remove engine top cover and check tappet clearances | Reset clearances |
| | | Check for defective valve springs | Replace as pairs |
| | | Rotate engine, using starting handle, and check for valves sticking open | Carry out engine decarbonise and top overhaul procedure |
| | | Check for worn valves and valve guides | Replace as necessary |
| | Faulty cylinder head gasket | Check for leaks across sealing areas | Replace as necessary |
| | Exhaust system faulty | Examine for possible restrictions | Remove restriction. Replace components as necessary |
| **E—Engine misfires on acceleration** | Distributor operation faulty | Check condition of contact breaker points. Check gap: .014 in. to .016 in. (0,35 mm to 0,40 mm) | Reface points and reset gap, or replace points if badly worn or pitted |
| | Coil or condenser faulty | Check by substituting serviceable components | Replace unserviceable components |

## Fault diagnosis—Engine—2¼ litre Petrol—*continued*

| Symptom | Possible cause | Investigation | Remedy |
|---|---|---|---|
| **E—Engine misfires on acceleration—cont** | Sparking plugs faulty | Remove sparking plugs, check for carbon deposits. Check electrode gap. Visually examine for signs of cracked insulation | If sparking plugs appear otherwise serviceable, clean off all deposits and reset the gap as described in Section N |
| | Carburetter operation faulty | Check for restrictions in carburetter fuel passages | Clean out passages as described in Section L |
| | | Check carburetter accelerator pump diaphragm and linkage, where applicable. Check carburetter control settings | Check carburetter as described in Section L |
| | Faulty distributor operation | Check condition and setting of distributor contact breaker points | Clean points and stone flat. Reset gap to .014 in. to .016 in. (0,35 mm to 0,40 mm) |
| | Ignition coil or distributor condenser faulty | Check by substituting new components | Replace as necessary, referring to Section L |
| **F—Engine backfires** | Air leakage | Check exhaust system and ensure joints are sound; check components for damage and cracks | Tighten joints or replace components as necessary, Section M |
| | Internal leakage | Excessively worn valve guides and valves may allow crankcase fumes to enter exhaust system | Carry out cylinder head overhaul procedure |
| | Ignition system defect | Check electrical leads, insulation and terminal connections | Clean and tighten terminals. Replace leads if necessary |
| | | Check condition of sparking plugs, insulation and electrode gap | Reset or replace as necessary Section N |
| | | Check if ignition timing setting is too retarded | Reset timing |
| | Carburetter defect | Check jets for any restriction which may cause a too weak mixture. Check mixture control setting | Check carburetter settings and clean out passages if necessary, Section L |
| | Valve operation incorrect | Check valve timing | Reset timing if necessary. Ensure that timing chain tensioner is free to operate, ensure that timing chain has no slack on driving side |
| | | Check tappet clearances | Reset clearances |
| | | Check for valves sticking open | Carry out engine decarbonise procedure |
| | | Check for badly seating valves | Carry out cylinder head overhaul procedure |
| **G—Engine knocks** | Ignition system defects | Check condition of sparking plugs | Reset or replace as necessary, Section N |
| | | Check if ignition timing is too advanced | Reset ignition timing to the correct setting for the fuel grade in use |
| | | Check operation of distributor advance and retard mechanism, Section N | |

## Fault diagnosis—Engine—2¼ litre Petrol—*continued*

| Symptom | Possible cause | Investigation | Remedy |
|---|---|---|---|
| **G—Engine knocks—cont** | Fuel system defects | Check setting of mixture control screw | Reset control screw as described in Section L |
| | | Check grade of fuel in use is suitable | Rotate octane selector on distributor. If engine knock stops, fuel in use is not correct for the ignition timing setting |
| | Valves operation incorrect | Check tappet clearances | Reset |
| | | Check valve timing | Reset |
| | Wear in engine | Check pistons and bearings | Overhaul as necessary |
| | Excessive carbon deposits | Remove cylinder head and check for deposits in combustion chamber areas | Remove carbon deposits |
| **H—Engine 'spits back' through carburetter** | Excessively weak mixture | Check setting of mixture control screw | Adjust control screw as detailed in Section L |
| | | Check for air leakage into fuel induction system | Tighten fixings or replace components as necessary |
| **J—Engine runs erratically** | Ignition timing incorrect | With engine running, rotate vernier adjuster at distributor through advance and retard range. If engine runs smoothly at a new position then the original ignition timing is incorrect for the fuel in use | Reset ignition timing to the correct setting for the fuel in use |
| | Fuel system defect | Check for restriction in fuel supply and for fuel pump malfunction, Section L | |
| | Electrical system defects | Check for faulty electrical connections | Clean and tighten at terminals. Replace leads if insulation is not sound |
| | | Check condition of sparking plugs | Clean and reset electrode gap. Replace plugs as necessary, Section N |
| | | Check battery connections and state of battery charge | Clean and tighten connections. Recharge battery if necessary, Section N |
| | | Check that vacuum pipe connection at distributor is sound | Rectify as necessary |
| | | Check distributor operation as described in Section N | |
| | Valves operation incorrect | Check tappet clearances | Reset |
| | | Check for valve sticking open. Check also for broken or defective valve springs | Carry out cylinder head overhaul procedure |
| | | Remove cylinder head and check for worn valves and valve guides. Examine cylinder head gasket for signs of leakage across th sealing areas | Carry out the cylinder head overhaul procedure |
| | Exhaust system defects | Check for damage, cracks and ensure joints are tight | Rectify or replace components as necessary, Section M |

## Fault diagnosis—Engine—2¼ litre Petrol—*continued*

| Symptom | Possible cause | Investigation | Remedy |
|---|---|---|---|
| **K—Lack of power** | Ignition system defect | Check condition of sparking plugs, insulation and electrode gap | Clean and reset electrode gap. Replace plugs if otherwise faulty |
| | | Check distributor advance and retard mechanism, as detailed in Section N | |
| | | Check for faulty coil, condenser or battery by substituting serviceable components | Replace as necessary, referring to Section N |
| | | Check ignition timing | Reset |
| | Poor engine compression | If the compression pressure is appreciably less than the figure quoted in the 'Data' section, the piston rings may be worn or the valve seating poor | Carry out the applicable overhaul procedures |
| | Clutch slip | If vehicle road speed does not respond adequately to engine speed increases during normal travel, clutch slip may be taking place | Carry out the fault diagnosis procedure described in Section B |
| | Fuel system defect | Check fuel system for external leakage. Check fuel tank filler breather is clear. Check for restrictions in fuel system, indicated by low fuel level in float chamber | Rectify as described in Section L |
| | Exhaust system faulty | Check for damage, holes and cracks | Replace components as necessary, Section M |
| | Brakes 'binding' | Check as detailed in Section H | |
| **L—Engine stalls** | Fuel system defects | Check the carburetter control screw settings. Ensure throttle stop and mixture settings are correct. | Reset as necessary, Section L |
| | | Check for restriction or foreign matter in fuel system | Rectify as detailed in Section L |
| | Ignition system defects | Check distributor contact breaker points and gap setting | Clean points and reset gap. Replace points as necessary, Section N |
| | | Check condition of sparking plugs, electrode gap and also examine insulation | Clean plugs and reset gaps as necessary, Section N. Replace plugs as necessary |
| | | Check operation of ignition coil and distributor condenser by substituting serviceable components | Replace as necessary, Section N |
| | Valve operation faulty | Check tappet clearances | Reset as necessary |
| **M—Noisy valve mechanism** | Valve operation incorrect | Check for excessive tappet clearances | Reset |
| | | Rotate engine and check for sticking valves, and broken or defective valve springs. Check for excessively worn components | Carry out cylinder head overhaul procedure. Replace valve springs |

## Fault diagnosis—Engine—2¼ litre Petrol—*continued*

| Symptom | Possible cause | Investigation | Remedy |
|---|---|---|---|
| **N—Main bearing rattle** | Low oil pressure | Refer to paragraph P for checks and remedy | |
| | Component or assembly defects | Check if main bearing cap fixings are loose | Tighten to correct torque loading |
| | | Check bearing clearance. Examine bearings and crankshaft for wear | Carry out the overhaul procedure |
| **P—Low oil pressure** | Insufficient oil supply | Check at engine dipstick | Replenish sump with correct grade lubricating oil, Section X refers |
| | External leakage | Check engine for oil leaks. Ensure oil pressure switch joint washer is sound | Rectify as necessary |
| | Oil pump operation faulty | Check the oil pump intake filter for restriction | Remove foreign matter if necessary. Clean filter in clean fuel |
| | | Check for wear in pump gears assembly | Carry out the oil pump overhaul procedure |
| | Oil pressure relief valve malfunction | Check for foreign matter on ball valve seat | Clean and refit |
| | | Relief valve plunger sticking | Clean and ensure smooth operation before refitting |
| | | Check that oil pump body joint fixings are tight | Tighten fixings |
| | | Relief valve spring weak. Check by substitution of serviceable spring | Replace spring |
| | Excessively worn bearings | Check bearing clearances at main journals, connecting rod big ends and camshaft as necessary | Replace the bearings, referring to the appropriate overhaul procedure |
| **Q—Oil pressure warning light remains 'ON', with engine running** | Low oil pressure | Refer to paragraph P for checks and remedy | |
| | Oil pressure switch unserviceable | Check by substitution of serviceable component | Replace switch |
| | Electrical fault | Check circuit connections and leads | Rectify poor connections or replace leads as applicable |
| **R—Warning light fails to glow with engine stopped and ignition switch 'ON'** | | Check warning lamp bulb by substitution of serviceable bulb | Replace bulb |
| | | Check oil pressure switch by substitution of a serviceable switch | Replace switch |
| | | Check electrical circuit | Rectify poor connections or replace leads as applicable |

## GENERAL DATA

| | |
|---|---|
| Capacity (piston displacement) | 2286 cc (140 cu in.) |
| Number of cylinders | 4 |
| Bore | 3.562 in. (90,47 mm) |
| Stroke | 3.5 in. (88,8 mm) |
| Compression ratio | 7:1 or 8:1 |
| BHP at 4,250 rpm | 77 81. |
| BMEP | 7:1 134 lb./sq. in. (9,4 kg./cm²) at 2,500 rpm<br>8:1 137 lb./sq. in. (9,6 kg./cm²) at 2,500 rpm |
| Maximum torque | 7:1 124 lb./ft. (17 mkg) at 2,500 rpm |
| Firing order | 1—3—4—2 |
| Piston speed at 4,280 rpm | 2,500 ft./min. (12,6 m./sec) |
| Compression pressure (at starter motor cranking speed, with engine hot) | 7:1 145 lb./sq. in. (10,2 kg./cm²)<br>8:1 160–170 lb./sq. in. (11,2–11,9 kg./cm²) |

## DETAIL DATA

### Camshaft

| | |
|---|---|
| Journal diameter | 1.842 in.—.001 (26,70 mm—0,025) |
| Clearance in bearing | .001 to .002 in. (0,02 to 0,05 mm) |
| End-float | .0025 to .0055 in. (0,06 to 0,14 mm) |
| Cam lift—inlet | .257 in. (6,53 mm) |
| Cam lift—exhaust | .257 in. (6,53 mm) |

### Camshaft bearings

| | |
|---|---|
| Type | Split, steel backed, white metal lined |
| Internal diameter (line-reamed in position) | 1.843 in.+.0005 (46,8 mm+0,012) |

### Connecting rods

| | |
|---|---|
| Bearing fit on crankpin | .001 to .0025 in. (0,025 to 0,063 mm) |
| Bearing nip | .002 to .004 in. (0,05 to 0,10 mm) |
| End-float at big-end | .007 to .011 in. (0,20 to 0,30 mm) |
| Gudgeon pin bush, fit in small-end | .001 to .003 in. (0,02 to 0,76 mm) interference |
| Gudgeon pin bush internal diameter—reamed in position | 1.000 in.+.0003 (25,4 mm+0,008) |
| Fit of gudgeon pin in bush | .0003 to .0005 in. (0,007 to 0,012 mm) clearance |

### Crankshaft

| | |
|---|---|
| Journal diameter | 2.5 in.—.0005 (63,5 mm—0,012) |
| Crankpin diameter: | |
| Early models | 2.126 in.—.001 (53,9 mm—0,025) |
| Late models | 2.312 in. (58, 7 mm) |
| End-float (controlled by thrust washers at centre bearing) | .002 to .006 in. (0,05 to 0,15 mm) |

Regrind sizes:

| Undersize | Journal dia. | Crankpin dia. |
|---|---|---|
| .010 in. (0,25 mm) | 2.490 in. (63,24 mm) | 2.302 in. (58,47 mm) |
| .020 in. (0,50 mm) | 2.480 in. (62,99 mm) | 2.292 in. (58,22 mm) |
| .030 in. (0,76 mm) | 2.470 in. (62,73 mm) | 2.282 in. (57,96 mm) |
| .040 in. (1,01 mm) | 2.460 in. (62,48 mm) | 2.272 in. (57,70 mm) |

**Flywheel**

| | |
|---|---|
| Number of teeth | 97 |
| Thickness at pressure face | 1.250 to 1.226 in. (31,75 to 31,14 mm) |
| Maximum permissible run-out on flywheel face | .002 in. (0,05 mm) |
| Primary pinion bush—fit in flywheel | .001 to .003 in. (0,02 to 0,07 mm) |
| Internal diameter—reamed in position | .878 in.+.0005 in. (22,3+0,013 mm) |
| Fit of shaft in bush | .001 to .003 in (0,025 to 0,076 mm) |
| Maximum refacing depth | .030 in. (0,76 mm) |
| Minimum overall thickness after grinding | 1.485 in. (37,7 mm) |

**Engine timing markings**

| | |
|---|---|
| Early engines | Timing marks and pointer at flywheel |
| Later engines | Valve timing marks at timing chain wheels<br>Ignition timing mark on crankshaft pulley, timing pointer at engine front cover |
| TDC (74–76 octane fuel) | When opposite pointer, No. 1 piston is at top dead centre |
| 3° BTDC (80–85 octane fuel)<br>6° BTDC (90–96 octane fuel) | When opposite pointer, indicates firing point of No. 1 cylinder when both valves are closed |

**Gudgeon pin**

| | |
|---|---|
| Fit in piston | Zero to .0002 in. (0,005 mm) interference |
| Fit in connecting rod bush | .0003 to .0005 in. (0,007 to 0,012 mm) clearance |

**Main bearings**

| | |
|---|---|
| Clearances on crankshaft journal | .001 to .0025 in. (0,02 to 0,06 mm) |
| Bearing nip | .004 to .006 in. (0,10 to 0,15 mm) |

**Pistons**

| | |
|---|---|
| Type | Light alloy, tin plated, flat top |
| Clearance in bore, measured at bottom of skirt at right angles to gudgeon pin | .0019 to .0023 in. (0,048 to 0,058 mm) |
| Clearance in bore, measured at top of skirt at right angles to gudgeon pin | .003 to .004 in (0,08 to 0,10 mm) |
| Fit of gudgeon pin in piston | Zero to .0002 in. (0,005 mm) interference |
| Gudgeon pin bore | .9998 in.+.0002 (25,37 mm+0,005) |

**Piston rings**

| | |
|---|---|
| Compression (2) | |
| Type | Taper periphery |
| Gap in bore | .015 to .020 in. (0,38 to 0,50 mm) |
| Clearance in groove | .0018 to .0038 in. (0,046 to 0,097 mm) |
| Scraper | |
| Type | Slotted, square friction edge |
| Gap in bore | .015 to .020 in. (0,38 to 0,50 mm) |
| Clearance in groove | .0015 to .0035 in. (0,038 to 0,089 mm) |

**Rocker gear**

| | |
|---|---|
| Bush internal diameter, reamed in position | .53 in.+.001 (13,4 mm+0,02) |
| Shaft clearance in rocker bush | .0005 to .0015 in. (0,013 to 0,038 mm) |

| | |
|---|---|
| **Tappet clearance** | .010 in. (0,25 mm) hot or cold |
| **Timing chain tensioner** | |
| Fit of bush in cylinder | .003 to .005 in. (0,07 to 0,12 mm) interference |
| Fit of bush in idler wheel | .001 to .003 in. (0,02 to 0,07 mm) interference |
| Fit of idler wheel on steel shaft | .001 to .003 in. (0,02 to 0,07 mm) clearance |
| Fit of piston in cylinder bush | .0003 to .0013 in. (0,008 to 0,033 mm) clearance |
| **Thrust bearings, crankshaft** | |
| Type | Semi-circular, steel back, tin plated on friction surface |
| Standard size, total thickness | .093 in.—.002 (2,362 mm—0,05) |
| Oversizes | .0025 in. (0,06 mm); .005 in. (0,12 mm); .0075 in. (0,18 mm); .010 in. (0,25 mm) |
| **Valves** | |
| Inlet valve | |
| Diameter (stem) | .3112 in.—.0005 (7,9 mm—0,013 mm) |
| Face angle | 30°—¼ |
| Exhaust valve | |
| Diameter (stem) | .3415—.0005 (8,67 mm—0,013) |
| Face angle | 45°—¼ |
| Fit of inlet valves in guide | .001 to .003 in. (0,02 to 0,07 mm) |
| Fit of exhaust valves in guide | .0023 to .0038 in. (0,096 to 0,058 mm |
| **Valve seat** | |
| Seat angle—inlet | 30° |
| Seat angle—exhaust | 45° |
| **Valve guides** | |
| Inlet guide bore size, after fitting | .3125 in.+.0015 (7,93 mm+0,04) |
| Exhaust guide bore size, after fitting | .3435 in.+.0015 (8,73 mm+0,04) |
| **Valve springs** | |
| Early type | |
| Inner | |
| Length—free | 1.61 in. (40,89 mm) |
| Length under 17.5 lb. (7,9 kg) load | 1.38 in. (35,1 mm) |
| Outer | |
| Length—free | 1.76 in. (44,9 mm) |
| Length under 46 lb. (21 kg) load | 1.50 in. (38,3mm) |
| Later type | |
| Inner | |
| Length—free | 1.680 in. (42,67 mm) |
| Length under 17.7 lb. (8,0 kg) load | 1.462 in. (37,13 mm) |
| Outer | |
| Length—free | 1.822 in. (46,28 mm) |
| Length under 46 lb. (21 kg) load | 1.587 in. (40,3 mm) |

**Valve timing**

| | |
|---|---|
| Inlet opens | 6° BTDC |
| Inlet closes | 52° ABDC |
| Inlet peak | 113° |
| Exhaust opens | 34° BBDC |
| Exhaust closes | 24° ATDC |
| Exhaust peak | 95° |

**Vertical drive shaft gear**

| | |
|---|---|
| Backlash | .006 to .010 in. (0,15 to 0,25 mm) |
| Internal diameter of bush | 1.063 in.+.001 (27.0 mm+0,02) |
| Fit of gear in bush | .001 to .003 in. (0,02 to 0,07 mm) clearance |

**Oil pump, early type**

| | |
|---|---|
| Type | Spur gear |
| Drive | Splined shaft from camshaft skew gear |
| End-float of gears | .002 to .005 in. (0,025 to 0,12 mm) |
| Radial clearance of gears | .0005 to .002 in. (0,012 to 0,050 mm) |
| Backlash of gears | .004 to .008 in. (0,10 to 0,20 mm) |

**Oil pump, late type**

| | |
|---|---|
| Type | Skew gear |
| Drive | Splined shaft from camshaft skew gear |
| End-float of gears: | |
| Steel gear | .002 in. (0,05 mm) to .005 in. (0,12 mm) |
| Aluminium gear | .003 in. (0,07 mm) to .006 in. (0,15 mm) |
| Radial clearance of gears | .001 to .004 in. (0,02 to 0,102 mm) |
| Backlash of gears | .006 to .012 in. (0,14 to 0,28 mm) |

**Oil pressure, engine warm**

| | |
|---|---|
| 2,000 rpm | 45 to 65 lb./sq. in. (3,16 to 4,57 kg cm$^2$) |

**Oil pressure relief valve**

| | |
|---|---|
| Type | Non-adjustable |
| Relief valve spring: | |
| Free length | 2.670 in. (67,82 mm) |
| Compressed length at 5.7 lb. (2.58 kg) load | 2.45 in. (61,23 mm) |

# SECTION A2—2¼ LITRE DIESEL ENGINE

# INDEX TO OPERATIONS

**Note:** A comprehensive, detailed Index is included at the end of this Manual

| Description of Listed Operations | Operation Number | |
|---|---|---|
| | Remove/Refit | Overhaul |
| Bonnet panel | A2-1 | — |
| Air cleaner | A2-2 | — |
| Radiator and grille panel assembly | A2-3 | — |
| Front floor | A2-4 | — |
| Engine | A2-5 | — |
| Fuel injectors | A2-6 | Section L |
| Fuel filter, replace element | A2-7 | — |
| Inlet and exhaust manifolds | A2-8 | — |
| Starter motor | A2-9 | Section N |
| Dynamo | A2-10 | Section N |
| Water pump | A2-11 | Section K |
| Thermostat and housing | A2-12 | Section K |
| Fuel pump | A2-13 | Section L |
| Engine side covers | A2-14 | — |
| Oil filter, external, replace element | A2-15 | — |
| Oil filter, external | A2-16 | A2-16 |
| Distributor pump | A2-17 | — |
| Distributor pump drive gears | A2-18 | — |
| Tappet adjustment | A2-19 | — |
| Valve gear, rocker shaft and push rods | A2-20 | A2-21 |
| Cylinder head | A2-22 | A2-23 |
| Tappet assemblies | A2-24 | — |
| Engine front cover and oil seal | A2-25 | — |
| Timing chain tensioner | A2-26 | — |
| Timing gears and chain, including valve timing procedure | A2-27 | — |
| Crankcase sump | A2-28 | — |
| Oil pump | A2-29 | A2-30 |
| Clutch assembly and flywheel | A2-31 | Section B |
| Rear main bearing oil seal and flywheel housing | A2-32 | — |
| Pistons and connecting rods | A2-33 | A2-34 |
| Crankshaft and main bearings | A2-35 | A2-36 |
| Camshaft | A2-37 | — |
| Cylinder block and camshaft bearings | — | A2-38 |
| Flywheel reclamation | A2-31 | A2-39 |

This Section concerns remove, refit and overhaul procedures for the 2¼ litre diesel engine.

When carrying out a complete engine overhaul, the section can be worked straight through in the order presented.

Alternatively, the individual operations which form the greater percentage of maintenance work undertaken by Distributors and Dealers, are detailed under appropriate headings, and will be found to be complete in themselves.

Some operations are marked with an asterisk * to indicate that they can be carried out with the engine installed. In all other cases it is necessary to remove the engine unit in order to carry out the work detailed.

Where LH (left-hand) or RH (right-hand) appear in the text this indicates LH or RH side of vehicle or engine when viewed from rear.

## Brief description of engine

The cylinder block is of cast iron. Re-boring is permitted up to a maximum of .040 in. (1,0 mm) oversize above the standard bore size of 3.562 in. (90,49 mm). Further reclamation is obtained by fitting cylinder liners and boring out to standard bore size. Re-boring of cylinder liners is permitted up to .010 in. (0,25 mm).

The crankshaft is supported by three bearings. The thrust is taken by the centre bearing. The bearings are steel shells lined with copper lead tin plating.

The camshaft is supported by four bearings and actuates roller type cam followers operating valve rockers through push rods, and lead/tin plated bronze slides. Adjustment is made on the adjusting screws on valve rockers. The bearings are white-metal lined steel shells.

The camshaft is chain driven and a chain tensioner is fitted.

The engine is lubricated by a pressure fed oil system which incorporates a pump located in the crankcase sump and an external full flow oil filter.

Engine component dimensions are provided in the Detail Data at the end of this Section.

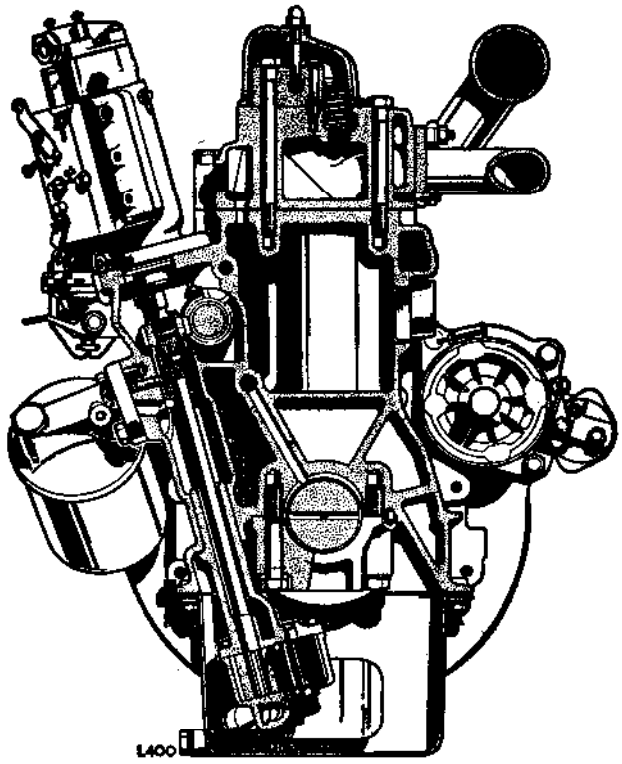


**Cross-section view of engine**

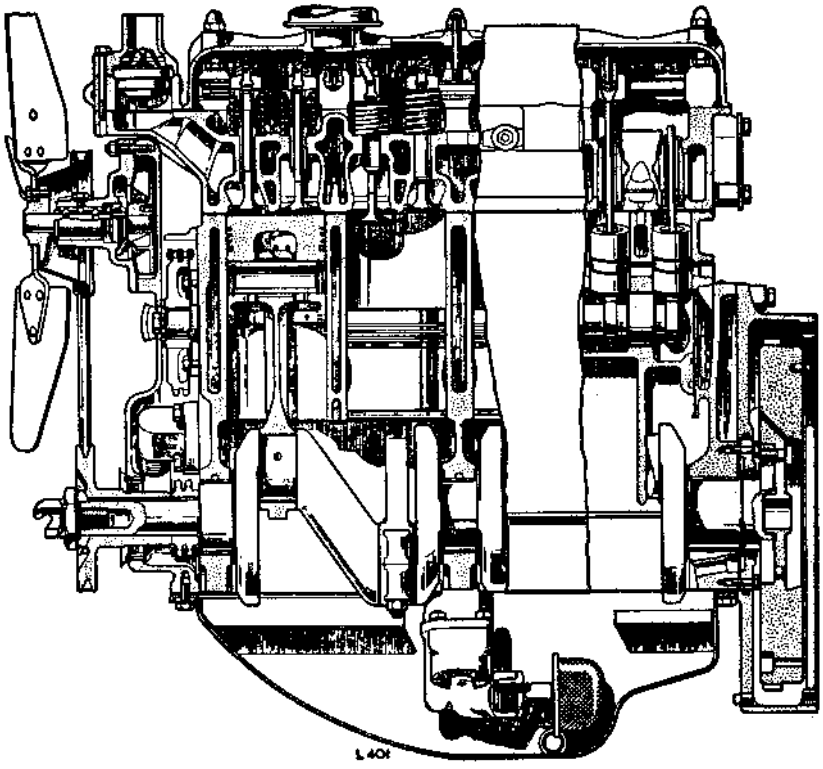


**Longitudinal view of engine**

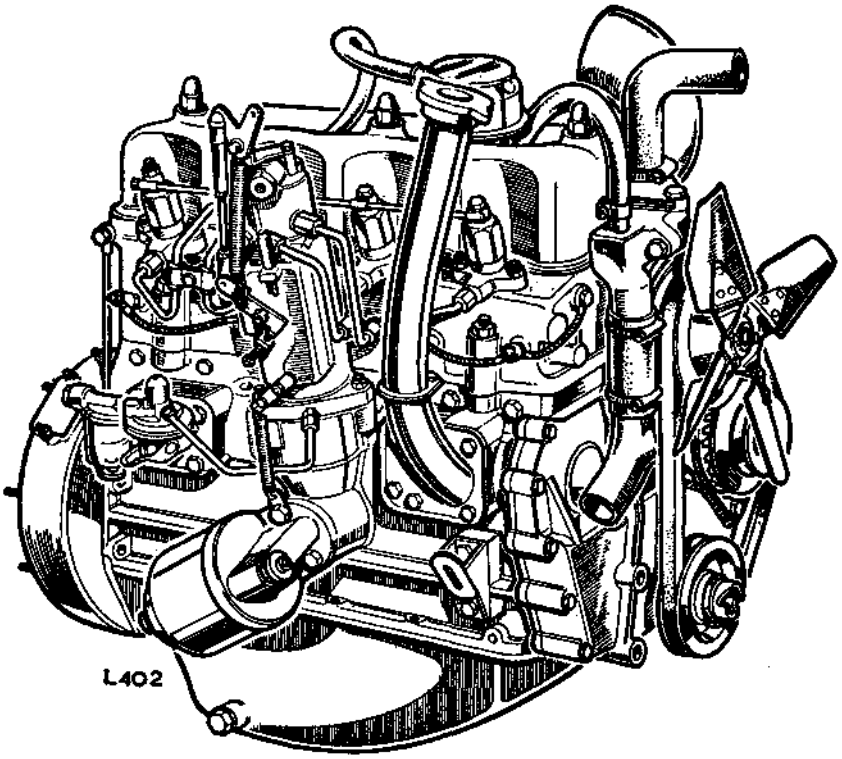


**General view of engine, RH side**

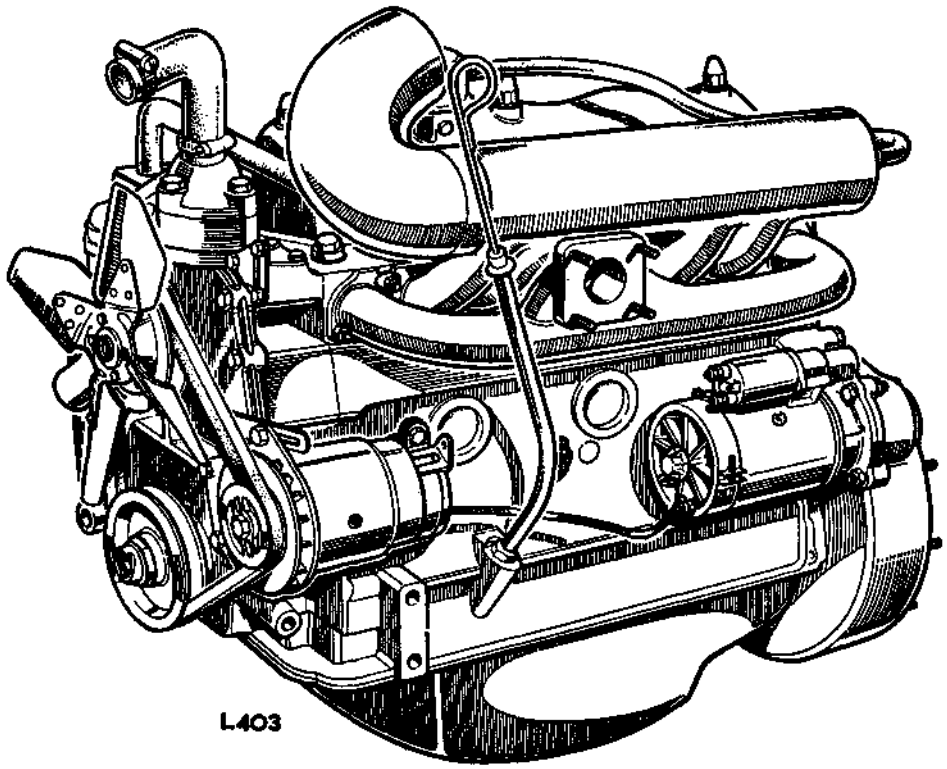


**General view of engine, LH side**

## *Bonnet panel, remove and refit—Operation A2-1

Workshop hand tools:
Screwdriver (medium), Pliers

### To remove

1. Remove the spare wheel from the bonnet panel, if fitted.
2. Remove fixings at prop rod and bonnet hinge.

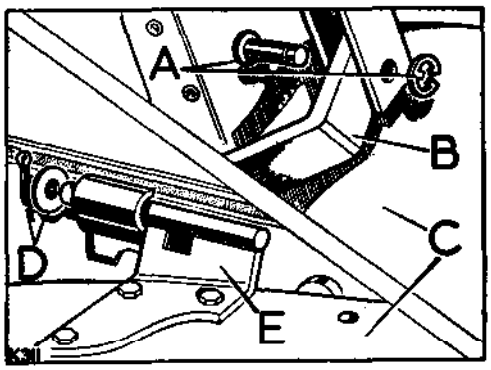


**Fig. A2-1. Fixings at bonnet panel**

A—Prop rod fixings
B—Bonnet prop rod
C—Bonnet panel
D—Bonnet hinge fixings, RH side only
E—Bonnet hinge

3. Remove bonnet panel.

### To refit

1. Refit the bonnet panel, using suitable coverings on the wings to avoid damage to paintwork.
2. Refit the spare wheel, if fitted, to bonnet panel.

## *Air cleaner, remove, clean and refit—Operation A2-2

Workshop hand tools:
Spanner sizes: $\frac{7}{16}$ in. AF open ended
Screwdriver (medium)

### To remove

1. Lift and prop bonnet.
2. Remove air intake hose from inlet manifold.

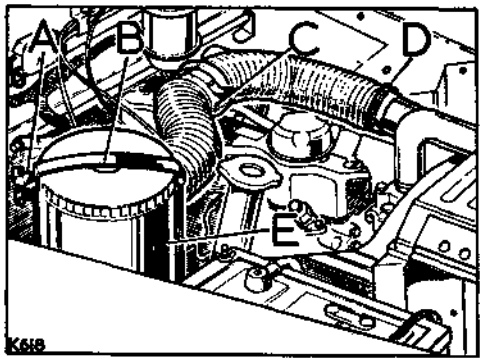


**Fig. A2-2. Air cleaner and hose fixings**

A—Retaining strap fixings
B—Air cleaner retaining strap
C—Hose support clip
D—Air cleaner hose fixings
E—Air cleaner

3. Slacken the fixings and move aside the retaining strap.
4. Remove air cleaner complete with hose.

### To dismantle and clean

1. Separate the air cleaner body assembly from the oil container, retained by clips.
2. Drain the oil and withdraw the wire mesh unit.

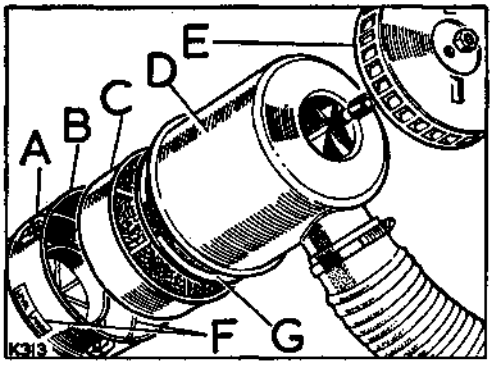


**Fig. A2-3. Exploded view of air cleaner**

A—Hinged clips
B—Oil container
C—Wire mesh unit
D—Air cleaner and mesh assembly
E—Air intake cap and fixing
F—Oil level mark
G—Sealing washer

3. Wash all components in clean fuel.

### To assemble

1. Fill the oil container with clean engine oil to the oil level mark on the container. See Fig. A2-3.
2. Reverse the dismantling procedure, fitting a new sealing washer between the oil container and the air cleaner body.

### To refit

1. Refit air cleaner and hose, if necessary, reposition the air cleaner body relative to the oil container to prevent the hinged clips from fouling on the retaining strap supports when fitted.

*Operations marked with an asterisk (*) can be carried out with the engine installed in the vehicle*

## *Radiator and grille panel assembly, remove and refit—Operation A2-3

Workshop hand tools:
Spanner sizes: $\frac{7}{16}$ in. x $\frac{1}{4}$ in. AF open ended, 2 off, 2 BA open ended
Screwdriver (medium), Pliers

### To remove

1. Remove bonnet. Operation A2-1.
2. Disconnect battery leads.
3. Remove front apron panel.

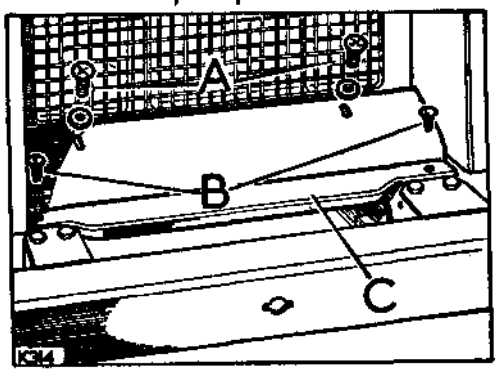


**Fig. A2-4. Apron panel fixings**
A—Fixings at cross member brackets
B—Fixings at side members
C—Apron panel

4. Remove nameplate and radiator grille.

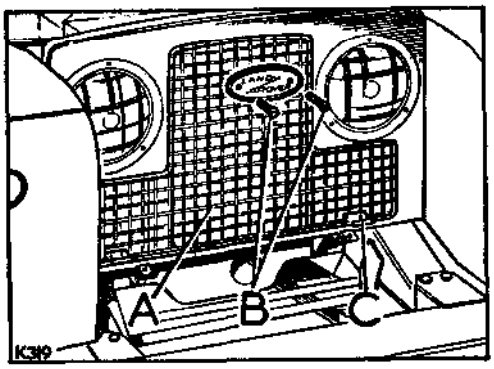


**Fig. A2-5. Radiator grille fixings**
A—Radiator grille
B—Fixings for nameplate and grille
C—Support brackets

5. Remove radiator cap, drain off coolant.

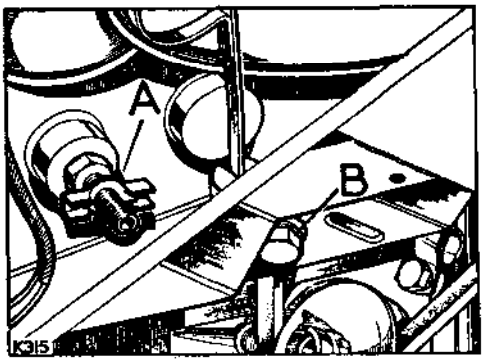


**Fig. A2-6. Coolant drain points location**
A—At engine block B—At radiator

6. Remove shroud from radiator fan cowl.

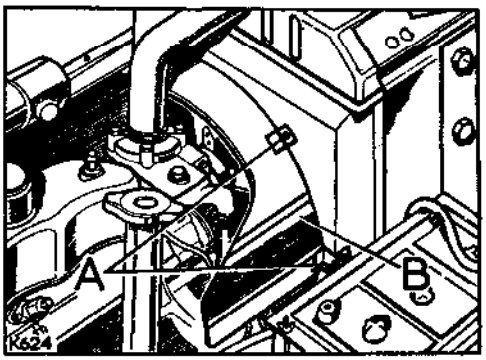


**Fig. A2-7. Fan shroud fixings**
A—Fixings for fan shroud
B—Fan shroud

7. Slacken fixings and detach radiator coolant hoses.

8. Remove the fan blades fixings and lower the fan blades to rest on lower part of fan cowl. Remove the fan blades when access is obtained during grille panel removal.

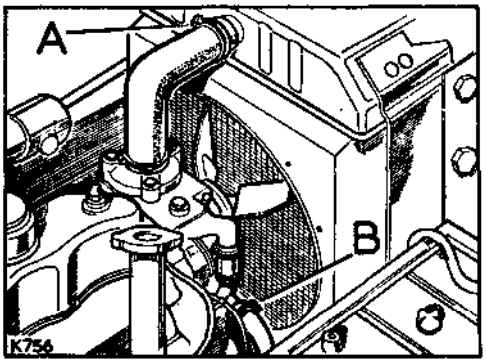


**Fig. A2-8. Coolant hose fixings**
A—Fixings at top hose
B—Fixings at bottom hose

9. Disconnect the electrical leads for the front lamps at the snap connectors and earth terminal. Withdraw harness clear from grille panel.

*Operations marked with an asterisk (*) can be carried out with the engine installed in the vehicle*

## Operation A2-3—*continued*

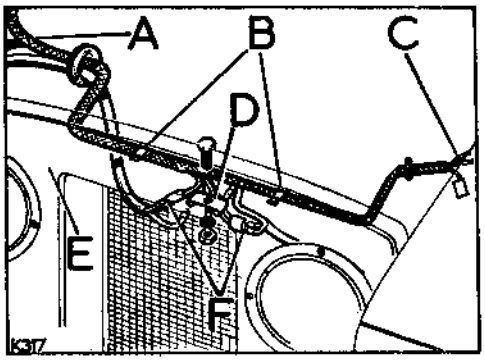


**Fig. A2-9. Front lamps electrical leads**

A—Electrical leads
B—Cable clips
C—Winglamp leads snap connectors
D—Earth connections
E—Grille panel
F—Headlamp leads snap connectors

10 Remove the grille panel to front wings fixings, the securing nuts and washers are located in the respective wheelarches.

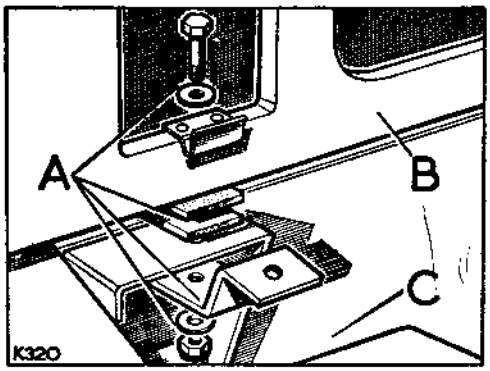


**Fig. A2-11. Fixings at chassis cross member**

A—Panel fixings
B—Radiator grille panel
C—Chassis cross member

12. Carefully withdraw the assembly and the previously released fan blades from the engine compartment.

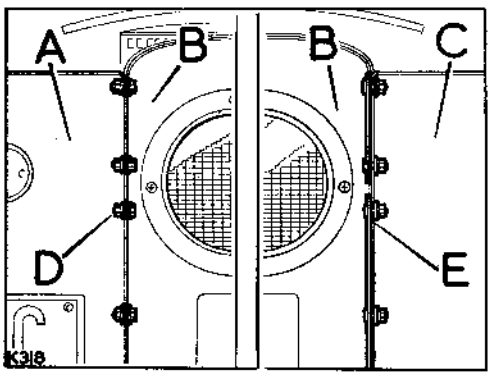


**Fig. A2-10. Radiator grille panel fixings**

A—Front wing, RH side
B—Radiator grille panel
C—Front wing, LH side
D—Fixings at RH side
E—Fixings at LH side

11. Remove the grille panel fixings at the brackets on the chassis cross member.

## Operation A2-3—*continued*

### To refit

1. Refit the radiator grille and radiator complete on to the vehicle. Fit the fan blades to the fan pulley before engaging the grille panel fixings.
2. Refit the electrical leads through the grille panel grommets and make the electrical connections at the snap connectors and earth terminal, referring to Fig. A2-9 and the appropriate circuit diagram, if necessary, in Section N.
3. Connect the coolant hoses and replenish the engine coolant system, allowing a free flow through the drain taps before closing them. Fig. A2-6 refers. Fill the radiator header tank to within ¼ in. to ¾ in. (12 mm to 19 mm) below the bottom of the filler neck.
4. Refit the fan cowl shroud, Fig. A2-7 refers.

**COOLANT SYSTEM**

**Bonneted Control Model, 2¼ Litre Diesel**

| | Capacity | Imperial Unit | US Unit | Litres | Antifreeze | Frost Precaution |
|---|---|---|---|---|---|---|
| 88 | 17½ pints | 17½ pints | 21 pints | 10,0 | 33⅓% | —25°F<br>—32°C |
| 109 | 17½ pints | 17½ pints | 21 pints | 10,0 | 33⅓% | —25°F<br>—32°C |

4. Refit the front apron panel. Fig. A2-4 refers.
5. Connect battery lead.
6. Refit the bonnet panel. Operation A2-1.

## *Front floor, remove and refit—Operation A2-4

Workshop hand tools:
Spanner sizes: $\frac{7}{16}$ in. AF, $\frac{7}{16}$ in. BSF open end, $\frac{7}{16}$ in. AF socket
Screwdriver (medium)

### To remove

1. Unscrew the knob and locknut from the transfer gear lever.
2. Remove the fixings and withdraw the dust cover from the transfer gear lever.
3. Unscrew the knob and locknut from the four-wheel drive lever, and withdraw the spring and ferrule.
4. Remove both halves of the front floor board.
5. Remove the gearbox tunnel cover.
6. Remove the gearbox tunnel front panel.

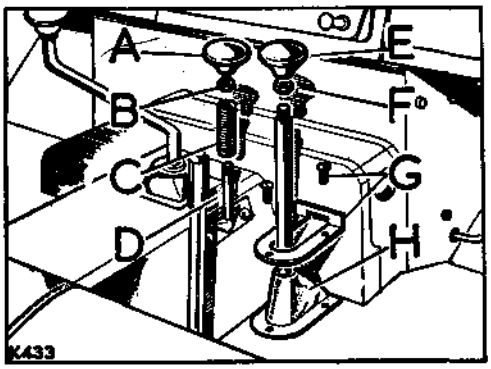


**Fig. A2-12. Four-wheel drive and transfer levers**

A—Knob, four-wheel drive lever
B—Locknut for knob
C—Spring
D—Ferrule
E—Knob, transfer gear lever
F—Locknut for knob
G—Fixings for dust cover
H—Dust cover

## Operation A2-4—*continued*

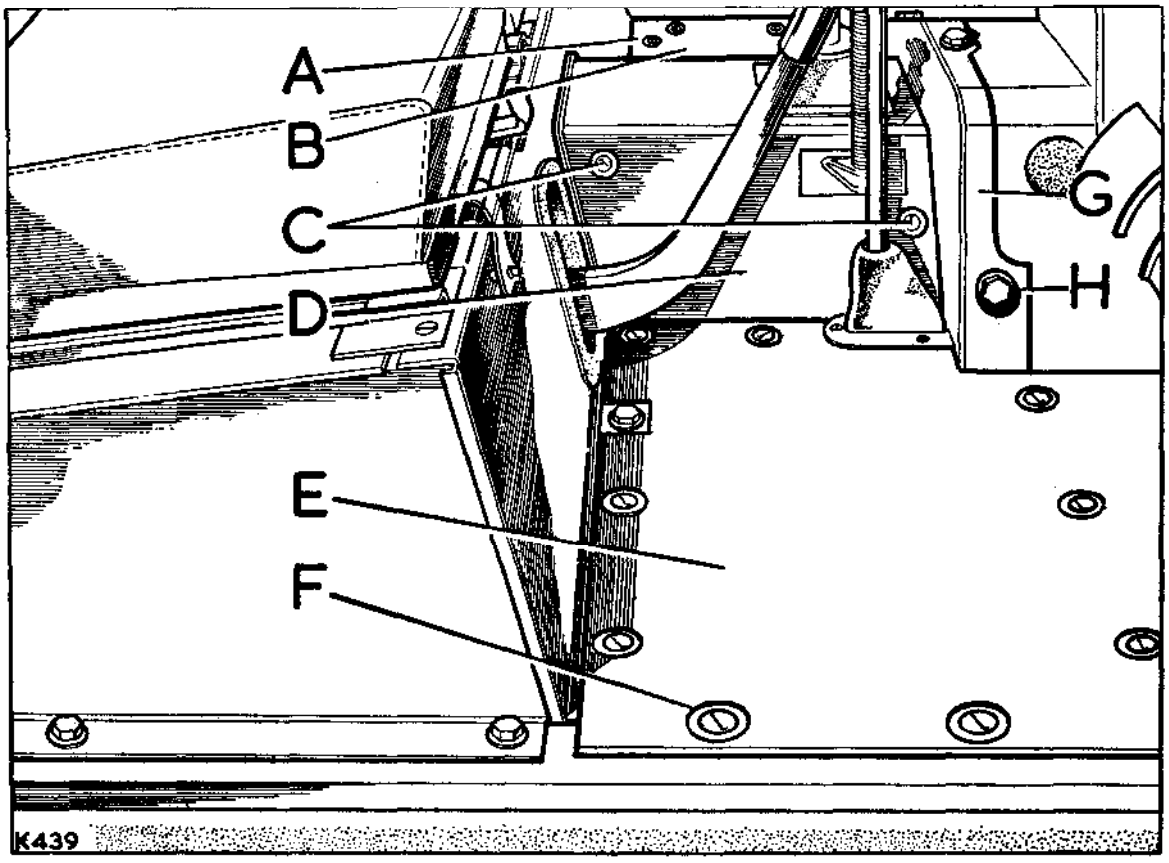


**Fig. A2-13. Front floor**

A—Fixings (9 off), left-hand floor board
B—Floor board, left-hand
C—Fixings (4 off), tunnel cover
D—Gearbox tunnel cover
E—Floor board, right-hand
F—Fixings (12 off), right-hand floor board
G—Front panel for gearbox tunnel cover
H—Fixings (4 off), front panel

### To refit

1. Reverse the removal procedure, using waterproof sealant between the joint flanges of the front floor and the chassis. A suitable sealant is 'Sealastrip', manufactured by Expandite Ltd., Chase Road, London NW10.
2. Adjust the four-wheel drive lever during assembly, as follows. Fit the ferrule, spring and locknut to the lever, depress the lever and adjust the locknut until the compressed spring length is 2 5/16 in. —1/16 in. (58 mm —1 mm), then fit the knob and tighten the locknut.

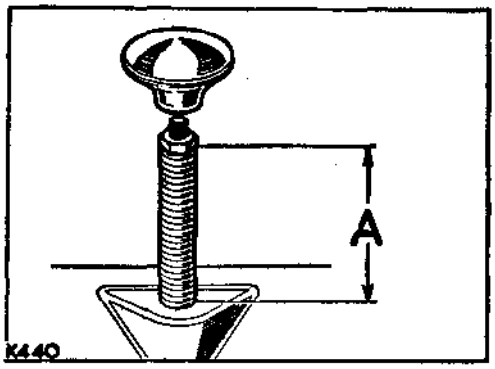


**Fig. A2-14. Adjusting four-wheel drive control lever**

A—2 5/16 in. —1/16 in. (58 mm —1 mm)

## Engine, remove and refit—Operation A2-5

Workshop hand tools:
Spanner sizes: $\frac{7}{16}$ in. x $\frac{1}{2}$ in. AF (2 off) open end
$\frac{5}{8}$ in. AF, $\frac{11}{16}$ in. AF open end
$\frac{7}{16}$ in. AF, $\frac{1}{2}$ in. AF ring
$\frac{1}{2}$ in. AF, $\frac{9}{16}$ in. AF socket
$\frac{3}{16}$ in. BSF, $\frac{3}{8}$ in. BSF open end
2 BA open end
Pliers, Screwdriver (medium)

Special tools:
Lifting sling for engine, Part No. 600963

### To remove

1. Remove the bonnet panel. Operation A2-1.
2. Disconnect the battery earth lead.
3. Remove the air cleaner. Operation A2-2.
4. Remove radiator and grille panel. Operation A2-3.
5. Remove the front floor. Operation A2-4.
6. Disconnect the following items at the left-hand side of the engine; refer to Fig. A2-15 for location details:
   (a) Front exhaust pipe at manifold.
   (b) Heater hoses, if fitted.
   (c) Starter motor leads.
   (d) Dynamo leads.
   (e) Engine earth cable.

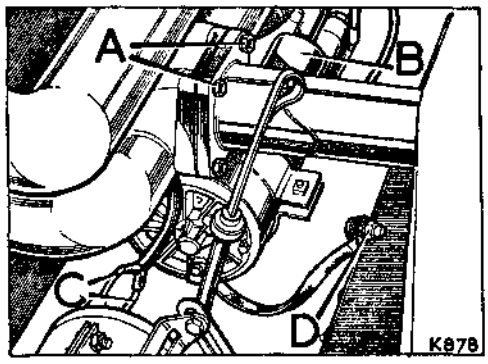


**Fig. A2-15. View of engine, LH side**

A—Front exhaust pipe fixings
B—Disconnect leads at solenoid
C—Dynamo leads
D—Engine earth cable fixings

7. Disconnect the following items at the right-hand side of the engine; refer to Fig. A2-16 for location details:
   (a) Electrical feed to heater plugs.
   (b) Fuel pipe to fuel pump.
   (c) Fuel pipe from spill pipe to fuel filter.
   (d) Oil pressure switch lead from external oil filter.
   (e) Accelerator linkage at fuel distributor pump.

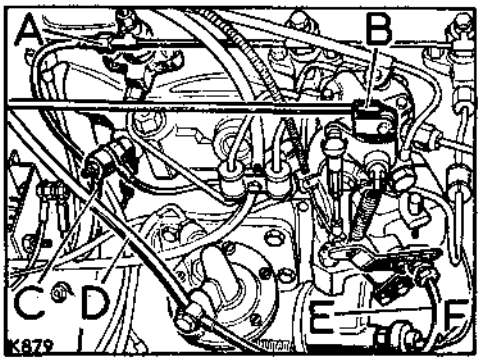


**Fig. A2-16. View of engine, RH side**

A—Fixing for spill pipe return
B—Disconnect accelerator linkage at clip
C—Electrical feed to heater plugs
D—Fuel pipe to fuel pump
E—Fuel return pipe
F—Oil pressure switch lead

8. Remove the engine mounting upper fixings.

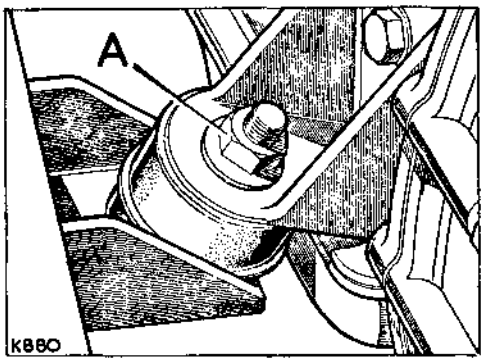


**Fig. A2-17. Engine mounting, RH side shown**

A—Upper fixings

## Operation A2-5—*continued*

9. Fit a suitable lifting sling and support the engine weight.

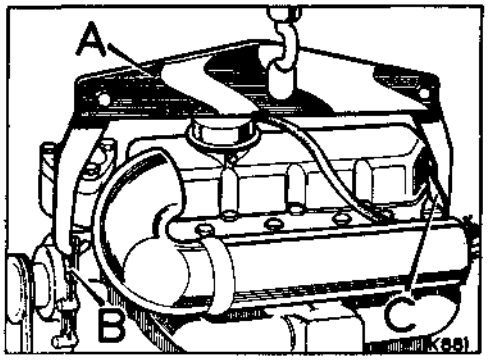


**Fig. A2-18. Engine lifting sling in position**

A—Engine lifting sling, Part No. 600963
B—Engine lifting bracket, front
C—Engine lifting bracket, rear

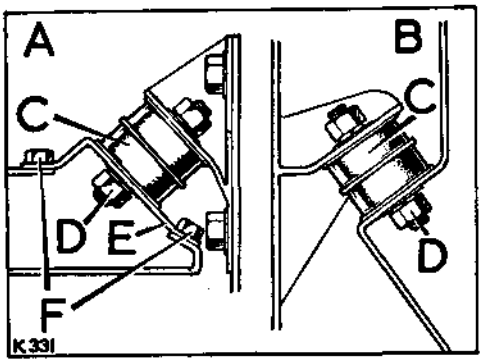


**Fig. A2-19. Engine front mounting details**

A—RH side mounting
B—LH side mounting
C—Suspension rubbers
D—Lower centre fixing
E—Support bracket at RH side fixing
F—Support bracket fixings

10. Remove the engine front mounting rubbers as follows:

    At LH side: remove lower centre fixing from suspension rubber and withdraw rubber.

    At RH side: remove support bracket fixings and withdraw the bracket and suspension rubber.

11. Lower the engine to regain alignment with the gearbox. Support the gearbox weight, using a suitable jack or packing block, and remove the bell housing to flywheel housing fixings.

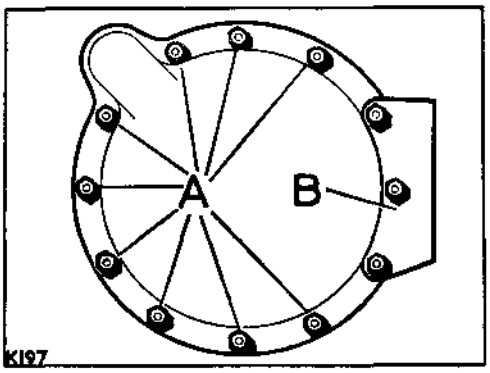


**Fig. A2-20. Bell housing fixings**

A—Fixings at bell housing
B—Fixings at clutch slave cylinder mounting

12. Pull the engine forward sufficient to disengage the drive from the gearbox. Ensure that all cables, pipes, etc. are clear then hoist the engine from the vehicle.

### To refit

1. Engage any gear to prevent gear shaft rotation. Offer engine to gearbox. It may be necessary to rotate the engine sufficient to align the gearbox primary pinion with the clutch plate splines. When aligned, push the engine fully to the rear and secure the bell housing to the flywheel housing, tightening the fixings evenly. Fig. A2-20 refers.

## Operation A2-5—*continued*

2. Lift the engine sufficient to remove the packing or jack from beneath the gearbox and insert the engine front suspension rubbers. Fig. A2-19 refers.
3. Lower the engine and fit the suspension rubber fixings.
4. Remove the engine lifting sling.
5. Refit the engine earth cable.

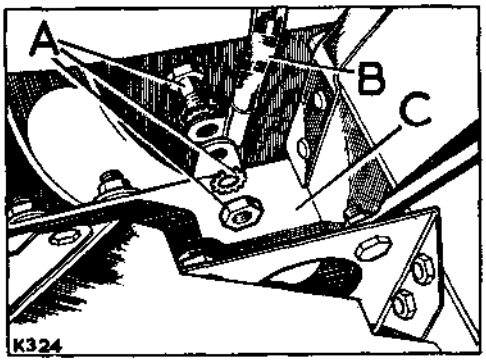


**Fig. A2-21. Engine earth cable**

A—Fixings
B—Earth cable
C—Chassis side member

6. Refit the dynamo electrical leads.

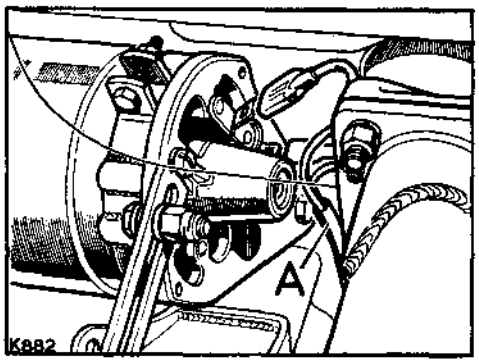


**Fig. A2-22. Dynamo electrical leads**

A—Leads with push-on connectors

7. Refit the starter motor leads.

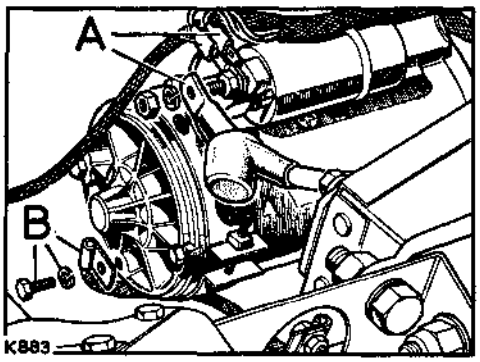


**Fig. A2-23. Starter motor leads**

A—Leads to solenoid terminals
B—Earth cable fixings

8. Reconnect the heater hoses, if fitted.

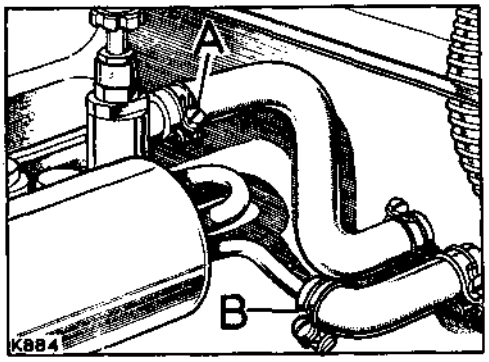


**Fig. A2-24. Heater hoses**

A—At control tap
B—At by-pass pipe

## Operation A2-5—*continued*

9. Refit the front exhaust pipe to the manifold.

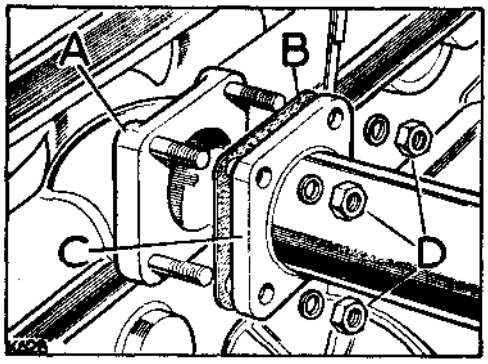


**Fig. A2-25. Front exhaust pipe**

A—Exhaust manifold
B—Joint washer
C—Front exhaust pipe
D—Fixings

10. Reconnect the electrical feed to the heater plugs.

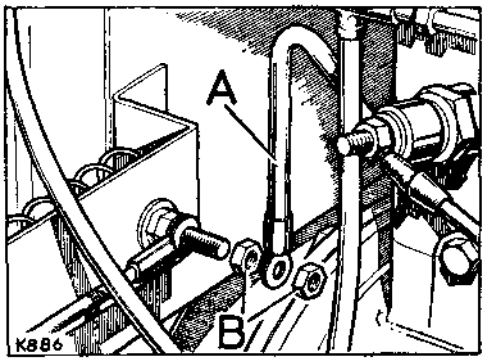


**Fig. A2-26. Heater plug feed**

A—Electrical feed lead
B—Fixings

11. Refit the fuel pipe to the fuel pump and the spill return pipe from the filter.

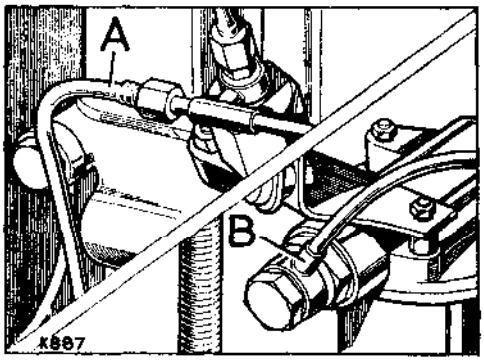


**Fig. A2-27. Fuel pipes at pump and spill pipe**

A—Spill return pipe to filter
B—Fuel inlet to pump

12. Reconnect the oil pressure switch lead to the external oil filter.

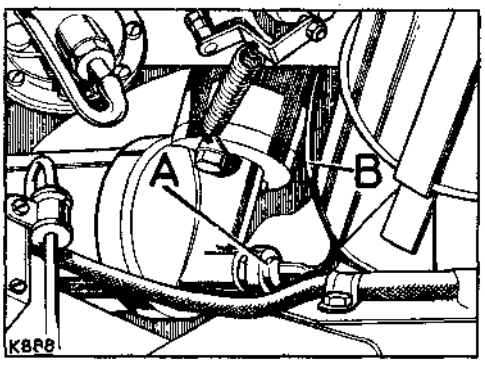


**Fig. A2-28. Oil pressure switch lead**

A—Oil filter terminal
B—Switch lead

## Operation A2-5—*continued*

13. Reconnect the accelerator linkage at the fuel distributor pump.

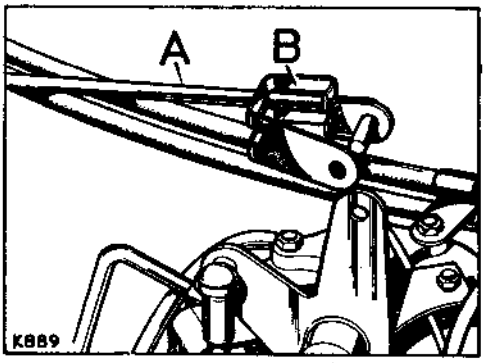


**Fig. A2-29. Accelerator linkage at pump**

A—Accelerator linkage
B—Spring clip

14. Refit the front floor. Operation A2-4.

15. Refit the radiator and grille panel. Operation A2-3, and refill the engine coolant system.

**COOLANT SYSTEM**
**Bonneted Control Model, 2¼ Litre Diesel**

| | Capacity | Imperial Unit | US Unit | Litres | Antifreeze | Frost Precaution |
|---|---|---|---|---|---|---|
| 88 | 17½ pints | 17½ pints | 21 pints | 10,0 | 33⅓% | —25°F<br>—32°C |
| 109 | 17½ pints | 17½ pints | 21 pints | 10,0 | 33⅓% | —25°F<br>—32°C |

16. Prime the fuel system as described in Section L.

17. Refit the air cleaner. Operation A2-2.

18. Reconnect the battery earth lead.

19. Refit the bonnet panel. Operation A2-1.

## *Fuel injectors, remove and refit—Operation A2-6

*(For overhaul instructions, Section L refers)*

Workshop hand tools:
Spanner sizes: ½ in. x $\frac{7}{16}$ in. AF open end (2 off)
$\frac{9}{16}$ in. AF, $\frac{5}{8}$ in. AF open end
½ in. AF socket
Screwdriver (medium), Pliers

Special tools:
Torque wrench

### To remove

1. Remove the bonnet panel. Operation A2-1.
2. Remove the air cleaner. Operation A2-2.
3. Slacken the injector fuel pipes at the distributor pump and disconnect at the injectors.
4. Disconnect the fuel spill pipe and slacken the spill pipe fixings at the injectors.

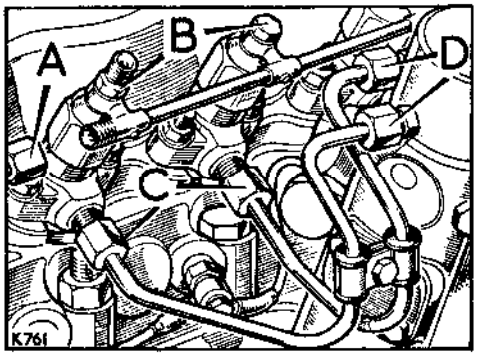


**Fig. A2-30. Injector fuel pipes arrangement**
A—Disconnect spill pipe here
B—Slacken spill pipe fixings at injectors
C—Disconnect pipes at injectors (4 off)
D—Slacken pipes at distributor pump (4 off)

5. Remove the fixings retaining the injectors and withdraw the injectors from the engine, complete with spill pipe.

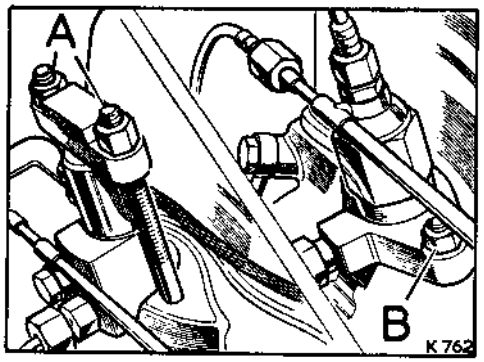


**Fig. A2-31. Fuel injector fixings**
A—Early type, fixings at clamp bars
B—Later type, fixings at injector flanges

6. Take care to avoid damage to the needle valves which protrude from the injector faces. Immerse the components in clean fuel pending overhaul or refitting.
7. Remove the steel sealing washers from the injector housing bores. The remaining sealing washers (copper) are normally withdrawn with the injectors, ensure that they are not left behind in the bores.

### To refit

1. Refit the new steel sealing washers into the injector bores, with the raised corrugation uppermost.

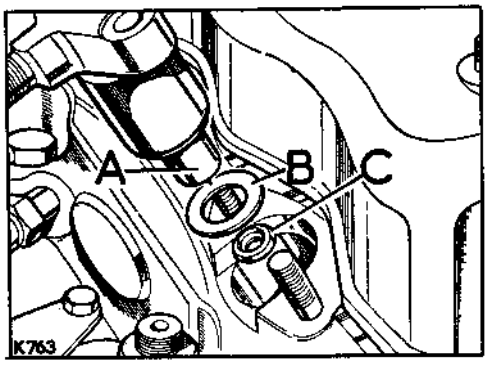


**Fig. A2-32. Injector sealing washers arrangement**
A—Injector
B—Copper sealing washer
C—Corrugated sealing washer

2. Refit the injectors and new copper sealing washers.
3. Fit the injector fixings and tighten evenly to a torque load of 6 lb ft to 8 lb ft (0,8 mkg to 1,0 mkg), Fig. A2-31 refers. **Do not overtighten the fixings.**
4. Refit the fuel pipes to the injectors and tighten at the distributor pump. Fig. A2-30 refers.
5. Refit the fuel spill pipe and tighten the spill pipe fixings at the injectors.
6. Prime the fuel system as described in Section L.
7. Refit the air cleaner. Operation A2-2.
8. Refit the bonnet panel. Operation A2-1.

*Operations marked with an asterisk (*) can be carried out with the vehicle installed in the engine*

## *Fuel filter, to replace element—Operation A2-7

Workshop hand tools:
Spanner size: ½ in. AF

### To replace element

1. Lift and prop bonnet panel.
2. Support element holder and unscrew the special bolt on the top of the filter, the element holder can now be removed.

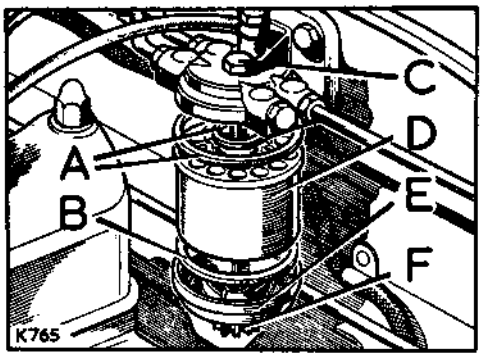


**Fig. A2-33. Fuel filter, located on engine dash panel**

A—Upper sealing washers
B—Lower sealing washer for element holder
C—Retaining bolt
D—Element
E—Element holder
F—Drain plug

3. Remove and discard the used element.
4. Wash the element holder in petrol or fuel oil.
5. Renew both the large sealing washer and the small sealing washer in the filter top, also renew the large sealing washer in the element holder.
6. Push new element on to filter top spigot with the perforated holes in the element to the top.
7. Fit the element holder to the bottom of the element, and secure with the special bolt.
8. Repeat the procedure on the second filter on twin filter systems.
9. Prime the system and check for fuel leaks, referring to Section L.
10. Close bonnet panel.

## *Inlet and exhaust manifolds, remove and refit—Operation A2-8

Workshop hand tools:
Spanner sizes: ½ in. AF ring, ½ in. AF open end, ½ in. AF socket
Screwdriver (medium)

### To remove

1. Remove bonnet panel. Operation A2-1.
2. Disconnect the air cleaner hose at inlet manifold and the engine breather pipe if fitted.

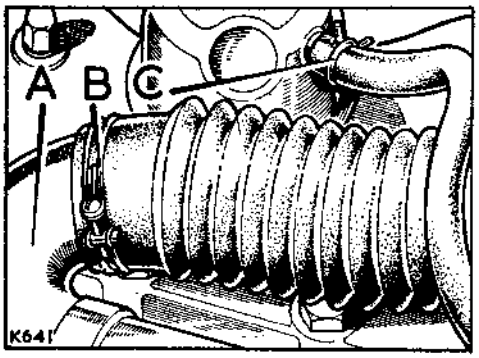


**Fig. A2-34. Inlet manifold connections**

A—Inlet manifold
B—Air cleaner hose fixing
C—Breather pipe fixing

3. Disconnect front exhaust pipe at manifold.

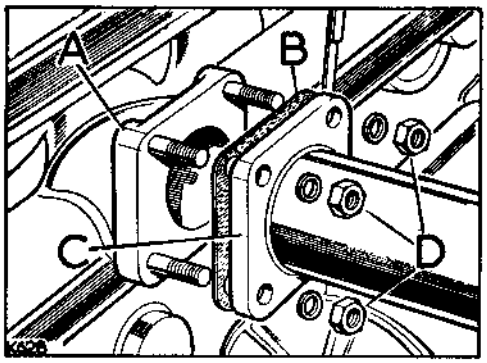


**Fig. A2-35. Exhaust pipe fixings**

A—Exhaust manifold
B—Joint washer
C—Front exhaust pipe
D—Fixings

4. Withdraw the oil level dipstick, remove the fixings and withdraw the manifolds.

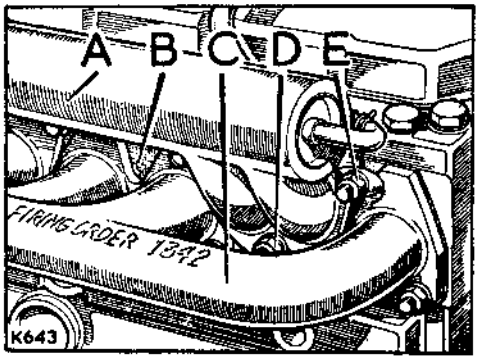


**Fig. A2-36. Manifolds fixings**

A—Inlet manifold
B—Joint washer
C—Exhaust manifold
D—Lower fixings (5 off)
E—Upper fixings (4 off)

### To refit

1. Fit the joint washer and position the exhaust manifold on the studs.
2. Position the inlet manifold and fit the clamp plates to the upper fixings to secure the two manifolds. Do not fully tighten at this stage.
3. Fit the remaining fixings to the lower studs and tighten all fixings evenly. Refit exhaust pipe.
4. Refit the inlet manifold connections, referring to Fig. A2-34.
5. Refit the bonnet panel. Operation A2-1.

*Operations marked with an asterisk (*) can be carried out with the engine installed in the vehicle*

## *Starter motor, remove and refit—Operation A2-9

*(For overhaul instructions, Section N refers*

Workshop hand tools:
Spanner sizes: ½ in. AF, $\frac{9}{16}$ in. AF, $\frac{11}{16}$ in. AF open end
Screwdriver (medium), Pliers

### To remove

1. Remove bonnet panel. Operation A2-1.
2. Disconnect battery.
3. Disconnect electrical leads.

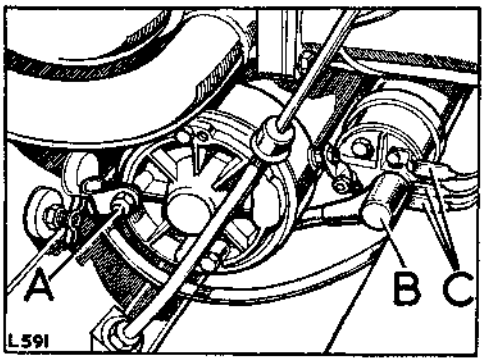


**Fig. A2-37. Electrical leads at starter**

A—Earth strap terminal
B—Withdraw rubber boot for access to lead
C—Push-on type connectors

4. Remove fixings at engine and withdraw starter.

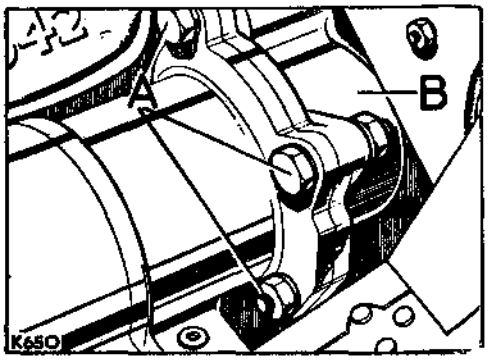


**Fig. A2-38. Starter motor fixings**

A—Fixings
B—Flywheel housing (LH side)

### To refit

1. Reverse the removal procedure.

*Operations marked with an asterisk (*) can be carried out with the engine installed in the vehicle*

## *Dynamo, remove and refit—Operation A2-10

*(For overhaul instructions, Section N refers)*

Workshop hand tools:
Spanner sizes: ½ in. AF open end, ½ in. AF socket, ½ in. AF ring
Screwdriver (medium), Pliers

### To remove

1. Remove bonnet panel. Operation A2-1.
2. Disconnect battery leads.
3. Remove dynamo leads and slacken the adjusting link fixings at front and rear.
4. Slacken the special stud fixings at the rear of the dynamo and the support bracket fixings at the front.

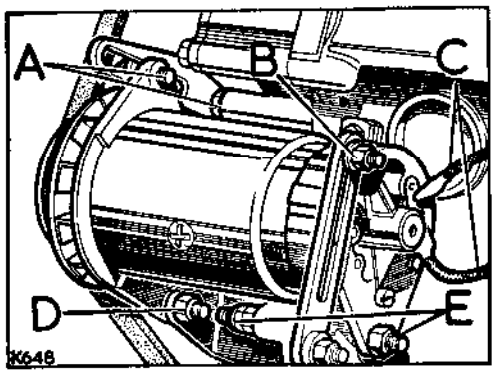


**Fig. A2-39. View of dynamo and fixings**

A—Adjusting link fixing, front
B—Adjusting link fixing, rear
C—Dynamo leads
D—Fixings at front support
E—Fixings at special stud

5. Move the dynamo toward the engine and remove the fan belt from the dynamo pulley.
6. Remove the slackened fixings and withdraw the dynamo.

### To refit

1. With the special stud and packing washers in position, offer the dynamo to the engine. Adjust the packing thickness, if necessary, to allow the dynamo pulley to align with the crank and fan pulley when fitted.
2. Fit the remaining fixings. Do not fully tighten at this stage.
3. Fit the fan belt and adjust the tension to $\frac{5}{16}$ in. to $\frac{7}{16}$ in. (8 mm to 11 mm) measured by thumb pressure applied to the belt between the crankshaft pulley and the fan pulley. Fully tighten all fixings.
4. Refit the dynamo electrical leads.
5. Connect the battery lead.
6. Refit the bonnet panel. Operation A2-1.

## *Water pump, remove and refit—Operation A2-11

*(For overhaul information, Section K refers)*

Workshop hand tools:
Spanner sizes: $\frac{7}{16}$ in. AF open end, $\frac{1}{2}$ in. AF ring
Screwdriver (medium), Pliers

### To remove

1. Remove bonnet panel. Operation A2-1.
2. Remove radiator filler cap and drain coolant.

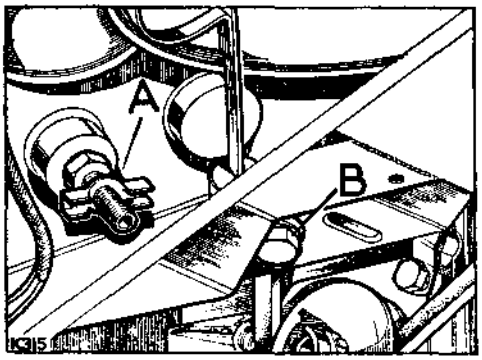


**Fig. A2-40. Coolant drain points location**

A—Cylinder block drain point
B—Radiator drain point

3. Remove the shroud from the radiator fan cowl.

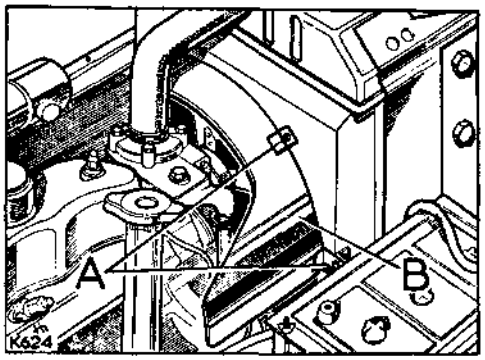


**Fig. A2-41. Fan cowl shroud fixings**

A—Fixings at fan cowl
B—Shroud

4. Slacken dynamo fixings and remove fan belt; remove dynamo adjusting link to gain access to water pump fixings.

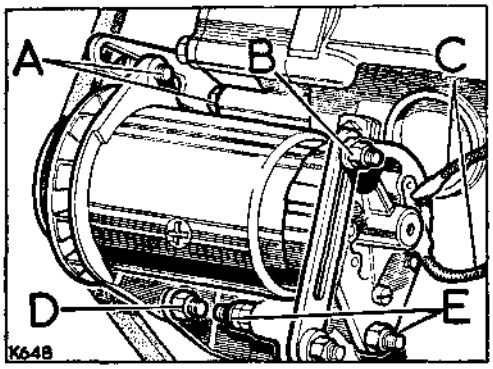


**Fig. A2-42. Dynamo fixings**

A—Adjusting link fixings, front
B—Adjusting link fixing, rear
C—Dynamo leads (reference only)
D—Fixings at front support
E—Fixings at special stud

5. Remove fan blades and fan pulley.

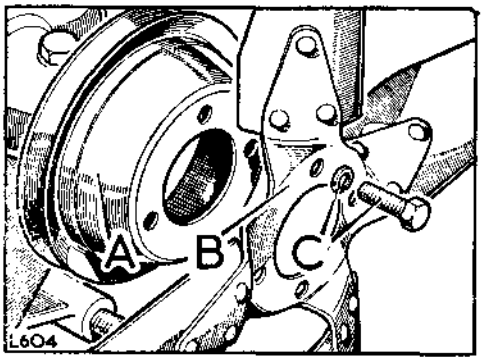


**Fig. A2-43. Fixings for fan and pulley**

A—Fan pulley, withdraw with fan blades
B—Fan blades, remove from vehicle or lower to rest on fan cowl
C—Fan blades fixings

*Operations marked with an asterisk (*) can be carried out with the engine installed in the vehicle*

## Operation A2-11—*continued*

6. Detach the radiator bottom hose and the by-pass hose from the water pump.

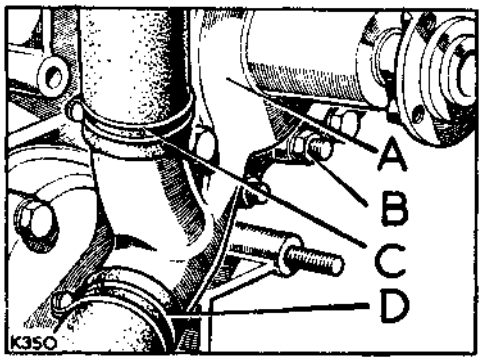


**Fig. A2-44. Water pump and hose fixings**

A—Water pump
B—Fixings
C—At by-pass hose
D—At radiator bottom hose

7. Remove fixings and withdraw water pump and gasket.

**To refit**

1. Smear general purpose grease on both sides of the joint washer and position on front cover joint face.
2. Complete the refitting by reversing the removal procedure.
3. Before finally tightening the dynamo fixings, set the fan belt tension. The tension is correct when the belt can be depressed $\frac{5}{16}$ in. to $\frac{7}{16}$ in. (8 mm to 11 mm) by thumb pressure applied between the fan pulley and crankshaft pulley.
4. Refill the engine coolant system.

**COOLANT SYSTEM**

**Bonnated Control Model, 2½ Litre Diesel**

| | Capacity | Imperial Unit | US Unit | Litres | Antifreeze | Frost Precaution |
|---|---|---|---|---|---|---|
| 88 | 17½ pints | 17½ pints | 21 pints | 10,0 | 33⅓% | —25°F<br>—32°C |
| 109 | 17½ pints | 17½ pints | 21 pints | 10,0 | 33⅓% | —25°F<br>—32°C |

5. Refit the bonnet panel. Operation A2-1.

## *Thermostat and housing, remove and refit—Operation A2-12

*(For thermostat overhaul information, Section K refers)*

Workshop hand tools:
Spanner sizes: $\frac{7}{16}$ in. AF ring
Screwdriver (medium)

### To remove

1. Lift and prop bonnet.
2. Remove radiator cap and partially drain coolant.

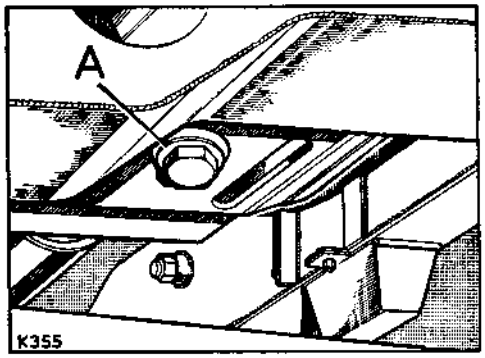


**Fig. A2-45. Radiator drain location**
A—Radiator drain plug

3. Disconnect top hose/s and remove by-pass pipe fixings.
4. Remove thermostat housing fixings and withdraw housing and outlet pipe complete. Remove joint washer.

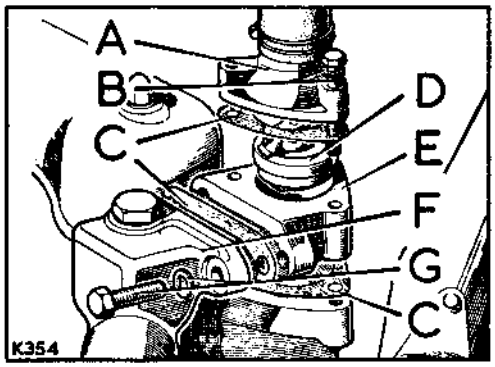


**Fig. A2-46. Thermostat housing fixings**
A—Outlet pipe
B—Fixings
C—Joint washers
D—Thermostat
E—Thermostat housing
F—By-pass pipe
G—Fixings

5. Separate housing from outlet pipe and withdraw thermostat and joint washer.

### To refit

1. Smear general purpose grease on both sides of the joint washers.
2. Fit the thermostat into the housing and position on the engine.
3. Assemble the outlet pipe and joint washer to the thermostat housing and fit the fixings.
4. Complete refitting by reversing the removal procedure. Refill coolant system as necessary.

**COOLANT SYSTEM**
**Bonneted Control Model, 2¼ Litre Diesel**

| | Capacity | Imperial Unit | US Unit | Litres | Antifreeze | Frost Precaution |
|---|---|---|---|---|---|---|
| 88 | 17½ pints | 17½ pints | 21 pints | 10.0 | 33⅓% | —25°F<br>—32°C |
| 109 | 17½ pints | 17½ pints | 21 pints | 10.0 | 33⅓% | —25°F<br>—32°C |

*Operations marked with an asterisk (*) can be carried out with the engine installed in the vehicle*

## *Fuel pump, remove and refit—Operation A2-13

*(For overhaul information, Section L refers)*

Workshop hand tools:
Spanner sizes: 11/16 in. AF open end, ½ in. AF open end, ½ in. AF socket
Screwdriver (medium), Pliers

### To remove

1. Remove bonnet panel. Operation A2-1.
2. Remove air cleaner. Operation A2-2.
3. Disconnect fuel pipes at fuel pump.
4. Remove the fixings and withdraw the pump and side cover complete.
5. If required, remove the fuel pump from the side cover.

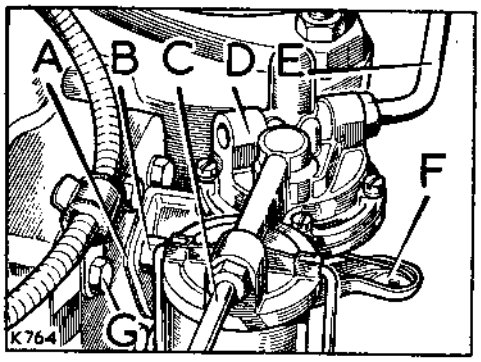


**Fig. A2-47. Fuel pump location and fixings**

A—Joint washer
B—Pump fixings
C—Fuel inlet pipe
D—Fuel pump
E—Fuel outlet pipe
F—Hand prime lever
G—Side cover fixings

### To refit

1. Refit pump to cover.
2. Smear general purpose grease on both sides of the joint washer.
3. Refit the fuel pump and joint washer and connect the fuel pipes.
4. Prime the fuel pump by operating the hand prime lever until no resistance is felt.
5. Release the air vent screws on the fuel distributor casing (Operation A2-17 refers) and operate the pump hand prime lever until the fuel flow from the vent screws is free of air. Close the vent screws.
6. Refit the air cleaner. Operation A2-2.
7. Refit the bonnet panel. Operation A2-1.

## *Engine side covers, remove and refit—Operation A2-14

Workshop hand tools:
Spanner sizes: 11/16 in. AF, ½ in. AF open ended, ½ in. AF socket
Screwdriver (medium), Pliers

### To remove

1. Remove bonnet panel. Operation A2-1.
2. Remove air cleaner. Operation A2-2.
3. Remove the fixings at the front side cover and withdraw the side cover and oil filler pipe complete with baffle and joint washers.
4. Disconnect the fuel inlet and outlet pipes at the fuel pump, remove the fixings at the rear side cover and withdraw the cover and fuel pump complete.

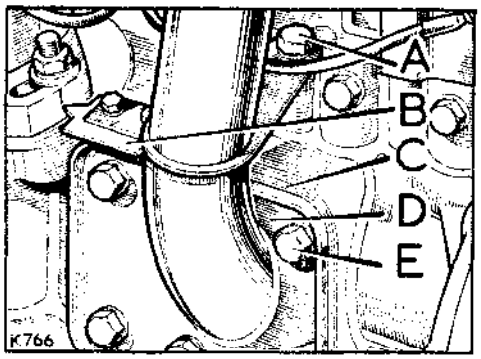


**Fig. A2-48. View of front side cover**

A—Fixings for filler pipe bracket
B—Distributor pump timing pointer, later engines
C—Joint washers and baffle plate
D—Filler pipe and side cover
E—Fixings for side cover

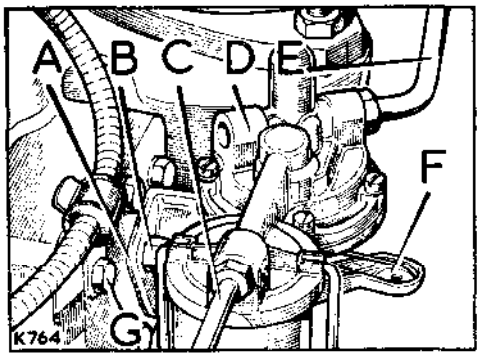


**Fig. A2-49. View of rear side cover**

A—Pump joint washer (reference only)
B—Pump fixings (reference only)
C—Fuel inlet pipe
D—Fuel pump
E—Fuel outlet pipe
F—Hand prime lever
G—Side cover fixings (6 off)

### To refit

1. Reverse the removal procedure. When fitting the front cover fixings, first engage the tapping nearest to the filler pipe, otherwise subsequent access for this fixing will be restricted. Also, align the timing pointer with the timing mark scribed on the fuel distributor pump flange (later engines).
2. Refit the air cleaner. Operation A2-2.
3. Refit the bonnet panel. Operation A2-1.

*Operations marked with an asterisk (*) can be carried out with the engine installed in the vehicle*

## *Oil filter, external, replace element—Operation A2-15

Workshop hand tools:
Spanner sizes: ⅝ in. AF socket

### Procedure

1. Position a suitable waste oil receptacle under the filter.
2. From under the vehicle, remove the centre fixing from the filter.
3. Remove filter and allow oil to drain.
4. Remove sealing ring from filter cap.
5. Replace filter element.

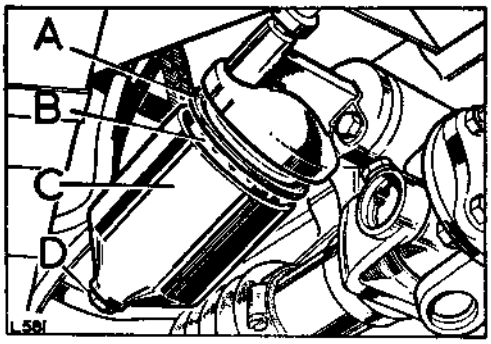


**Fig. A2-50. View of oil filter**

A—Sealing ring
B—Element
C—Container
D—Fixing for container

6. Fit the new element to the filter body and refit body to cap. Ensure filter body is fully home on to sealing ring in filter cap.
7. Replenish the engine lubricating oil.
8. Check the sump oil level after a short engine run and top-up as necessary.

**ENGINE LUBRICANT CAPACITY**
**Bonneted Control Model, 2¼ Litre Diesel**

| | | Capacity | Imperial Unit | US Unit | Litres |
|---|---|---|---|---|---|
| 88 | Engine | 11 pints | 11 pints | 13 pints | 6,0 |
| | Filter | 1½ pints | 1½ pints | 1.8 pints | 0,85 |
| | Engine and Filter | 12½ pints | 12½ pints | 14.8 pints | 6,85 |
| 109 | Engine | 11 pints | 11 pints | 13 pints | 6,0 |
| | Filter | 1½ pints | 1½ pints | 1.8 pints | 0,85 |
| | Engine and Filter | 12½ pints | 12½ pints | 14.8 pints | 6,85 |

*Operations marked with an asterisk (*) can be carried out with the engine installed in the vehicle*

## *Oil filter, external, remove, overhaul and refit—Operation A2-16

Workshop hand tools:
Spanner sizes: ⅜ in. AF, 1⅛ in. AF socket, ⅝ in. BSF open end

### To remove

1. Lift and prop bonnet.
2. Detach oil pressure switch lead.
3. Remove the fixings and withdraw the oil filter and joint washer.

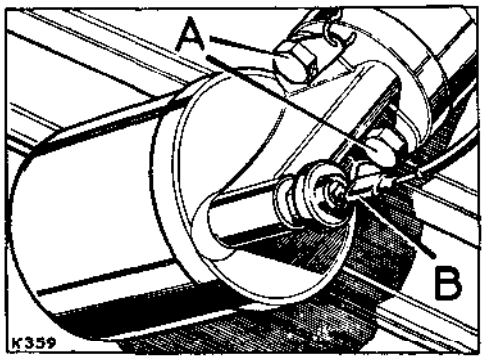


**Fig. A2-51. Oil filter fixings**
A—Fixings, filter to engine, RH side
B—Oil pressure switch lead

### To overhaul

1. Drain off oil.
2. Remove the centre fixing at the filter base and dismantle the filter assembly.

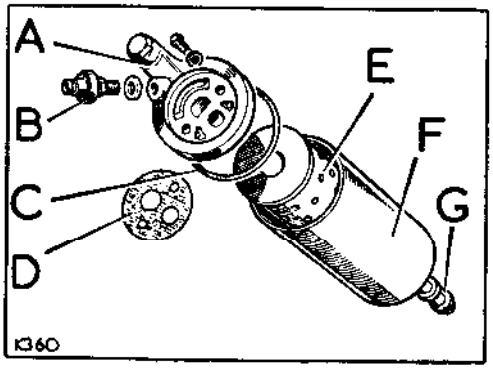


**Fig. A2-52. Exploded view of oil filters**

A—Top cover
B—Oil pressure switch
C—Sealing washer
D—Joint washer
E—Element
F—Container
G—Centre fixing

3. Wash the components in clean fuel and inspect for general condition.
4. Replace the sealing washer and filter element.
5. Reverse the dismantling procedure.

### To refit

1. Smear general purpose grease on to both sides of the joint washer.
2. Refit filter body to top cover, ensuring that the body seats correctly on to the sealing ring.
3. Refit the assembled filter to the engine, Fig. A2-51 refers, and connect the oil pressure switch lead.
4. Replenish the engine lubricating oil and top-up as necessary after a short engine run.

**ENGINE LUBRICANT CAPACITY**
**Bonnetted Control Model, 2¼ Litre Diesel**

| | | Capacity | Imperial Unit | US Unit | Litres |
|---|---|---|---|---|---|
| 88 | Engine | 11 pints | 11 pints | 13 pints | 6,0 |
| | Filter | 1½ pints | 1½ pints | 1.8 pints | 0,85 |
| | Engine and Filter | 12½ pints | 12½ pints | 14.8 pints | 6,85 |
| 109 | Engine | 11 pints | 11 pints | 13 pints | 6,0 |
| | Filter | 1½ pints | 1½ pints | 1.8 pints | 0,85 |
| | Engine and Filter | 12½ pints | 12½ pints | 14.8 pints | 6,85 |

5. Close the bonnet panel.

*Operations marked with an asterisk (*) can be carried out with the engine installed in the vehicle*

## *Distributor pump, remove and refit—Operation A2-17

**This Operation includes distributor pump timing procedure**

Workshop hand tools:

Spanner sizes: $\frac{5}{16}$ in. AF, $\frac{9}{16}$ in. AF, $\frac{5}{8}$ in. AF, $\frac{1}{2}$ in. AF, $\frac{7}{16}$ in. AF open end
$\frac{1}{2}$ in. AF socket

Special tools:

Part No. 605863—Timing gauge for use with later type distributor pump

### To remove

1. Remove the bonnet panel. Operation A2-1.
2. Disconnect the battery earth lead.
3. Remove the air cleaner. Operation A2-2.
4. Disconnect the engine stop cable and stop spring.
5. Disconnect the accelerator linkage at the securing clip.

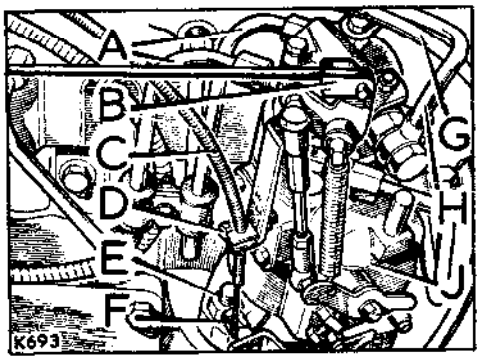


**Fig. A2-53. View of distributor pump**

A—Injector pipes
B—Accelerator linkage clip
C—Engine stop cable
D—Outer cable fixing
E—Pump fixings (3 off)
F—Inner cable fixing
G—Fuel outlet pipe
H—Fuel inlet pipe
J—Distributor pump

6. Slacken the fuel inlet pipes at the injectors and disconnect all the fuel pipes at the distributor pump.
7. Remove the fixings at the distributor pump base. lift pump from engine.

### To refit and set pump timing

1. Remove the engine top cover.

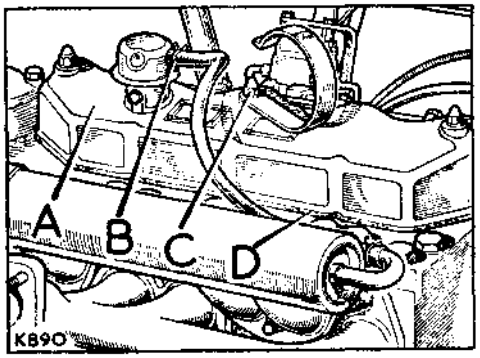


**Fig. A2-54. Engine top cover**

A—Top cover B—Breather hose fixing
C—Fixings (3 off) D—Joint washer

### Distributor pump timing procedures

1. The following procedures for distributor pump timing concern early and late type pumps.

   Early type pumps have internal timing marks viewed through an inspection aperture, the timing mark on the pump rotor to be aligned with the mark scribed on the round edged circlip or with the straight edge of the circlip, depending on the type fitted.

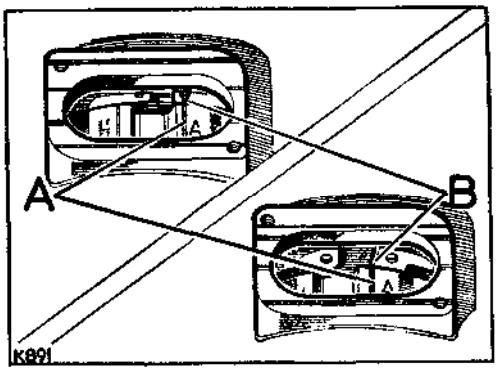


**Fig. A2-55. Early type distributor pumps**

A—Timing mark on pump rotor
B—Scribed mark or straight edge as applicable

2. Later type pumps, identified by the DPA No. 3248760 marked on the manufacturer's label, have

## Operation A2-17—*continued*

an external timing mark on the pump mounting flange which, used in conjunction with an engine mounted timing pointer, allows the pump timing to be set without the need to remove the inspection cover from the pump.

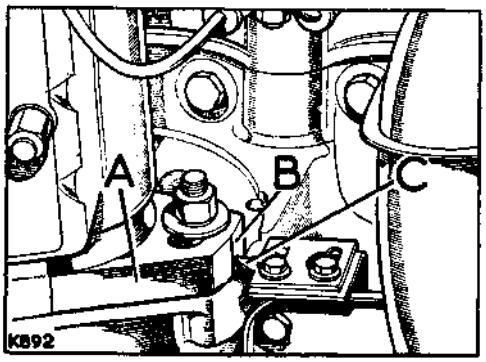


**Fig. A2-56. Later type distributor pump**
A—Pump mounting flange
B—Timing mark
C—Timing pointer

### Setting flywheel position, early and late type pumps

1. Turn the crankshaft in direction of rotation until both valves on No. 1 cylinder are fully closed (indicated by clearance between the rocker pads and valve stems) and No. 1 piston on compression stroke.

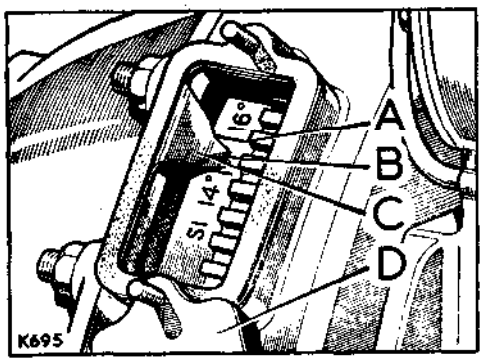


**Fig. A2-57. Timing marks at flywheel**
A—16° mark on flywheel, for use with early type pumps
B—15° mark on flywheel, for use with later type pumps
C—Timing pointer
D—Inspection cover on flywheel housing

2. Continue to turn the crankshaft slowly until the applicable timing mark (see Fig. A2-57) is aligned with the timing pointer on the flywheel housing. If a 15° mark (for later pumps) is not provided, make a suitable mark midway between the 14° and 16° marks.

   If the engine is inadvertently turned too far and the timing mark passes the pointer, do not turn the flywheel back but instead repeat the foregoing procedure.

3. Ensure that the vertical drive gear master spline is correctly positioned.

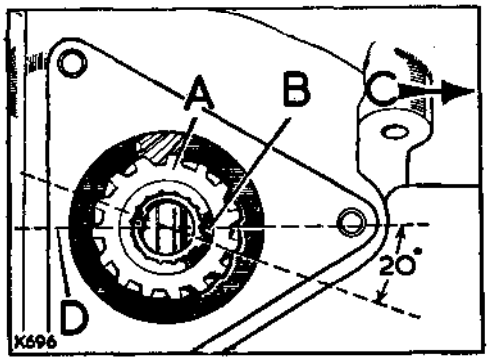


**Fig. A2-58. Vertical drive gear correctly positioned**

A—Vertical drive gear
B—Master spline to be at 20° angle to engine centre line
C—Front of engine
D—Line parallel with engine centre line

4. With the engine set as described, the distributor pump may now be fitted and correctly aligned with the applicable timing marks as follows:

### Distributor pump timing, pumps with internal timing marks (early type pumps, 16° setting)

1. Fit the short drive shaft to the vertical drive shaft gear, narrow portion nearest to the camshaft. If a splined type drive shaft is being used, fit the chamfered end first and engage the master splines.

## Operation A2-17—*continued*

2. Remove the inspection cover from the side of the fuel distributor pump. Rotate the spindle of the pump until the line marked 'A' on the driving plate aligns with the timing circlip mark. See the illustration for the early and late types of circlip.
3. Offer the distributor pump to the engine and engage the pump drive. Fit the pump fixings and tighten sufficient to prevent the pump from rocking sideways but allowing rotational movement. Observe the timing marks through the inspection window and make any necessary final adjustment to align the marks by turning the pump body in the required direction. When turning the pump body in the direction of pump rotation, hold the drive plate against the direction of rotation to eliminate the possibility of the backlash, which exists between the vertical drive shaft gear and the camshaft gear, causing any error.

   **Note:** Any error of a given width on the pump marking will be 12 times that width if transferred to the flywheel.
4. When the marks are correctly aligned, fully tighten the three securing nuts. Recheck the timing by turning the crankshaft in the direction of rotation until both valves of No. 1 cylinder are closed and the piston is ascending the bore on the compression stroke. Ensure that the timing line adjacent to letter 'A' on the driving plate is in alignment with the circlip mark, according to type, and that the 16° mark on the flywheel is exactly in line with the timing pointer, as previously illustrated in Fig. A2-57.

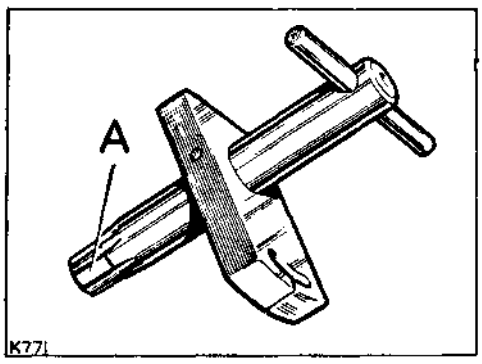


**Fig. A2-59. Timing gauge, Part No. 605863**

A—Master spline

**Distributor pump timing, pumps with external timing mark (later type pumps, 15° setting)**

1. Offer up the timing gauge, Part No. 605863, to the vertical drive gear, aligning the master splines.
2. Insert the timing gauge into the driving gear, then twist gauge in a clockwise direction to take up backlash and any wear in the gears. Hold in this position, then, if necessary, slacken off bolts retaining timing pointer on side of cylinder block. Adjust pointer so that it coincides with the line on timing gauge.

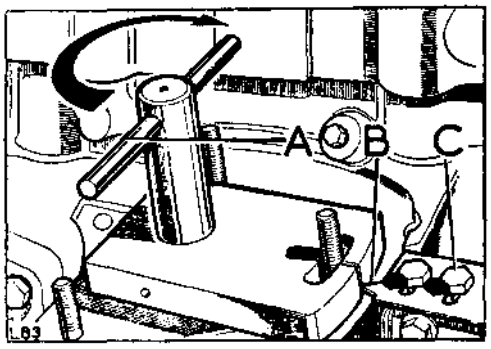


**Fig. A2-60. Timing gauge located in driving gear**

A—Timing gauge in position
B—Timing pointer adjusted so that point coincides with line on gauge
C—Bolts retaining timing pointer

3. Remove timing gauge and insert the short drive shaft, located by master spline.
4. Rotate driving gear on distributor pump so that master spline lines up with master spline on driving gear.

   Then offer pump to engine, ensuring that the timing mark on the pump flange coincides with the timing pointer.
5. When the distributor pump is timed as detailed above, that is, with the timing pointer on the engine altered to take up backlash and wear on the gears, the distributor pump timing is at the optimum position.

## Operation A2-17—*continued*

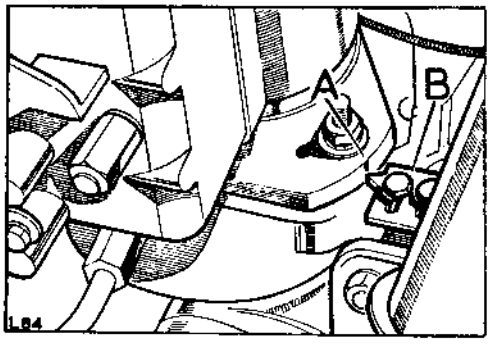


**Fig. A2-61. Distributor pump correctly timed**

A—Timing mark on distributor pump
B—Timing pointer

### Distributor pump refitting continued, early and later type pumps

1. Connect the fuel pipes, accelerator linkage and stop cables, Fig. A2-53 refers, and check the controls for full movement.
2. Release the air vent screws on the distributor pump casing, (see Fig. A2-62) and operate the hand priming lever at the base of the fuel pump. This will cause fuel to flow through the air vents orifices.

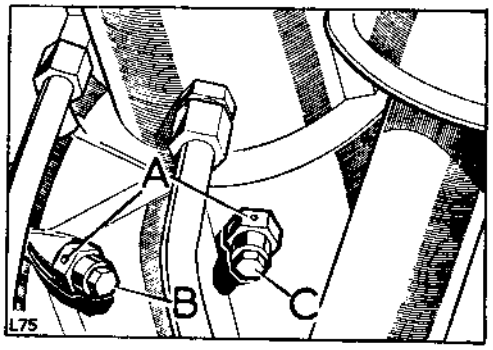


**Fig. A2-62. Priming the fuel system**

A—Fuel orifice
B—Air vent screw on distributor body
C—Air vent screw on distributor control cover

3. When the fuel flow is free of air, close the air vent screws.
4. Refit the engine top cover, Fig. A2-54 refers.
5. Continue the procedure by setting the distributor pump control screws. Before starting the engine to set the screws, crank the engine, using the starter motor, and bleed the distributor pump to injectors fuel line by slackening off one injector feed pipe. Allow fuel to flow until air-free then retighten pipe.

### Setting the distributor pump control screws

On distributor pumps with the maximum output control screw sealed, the control screw setting must not be altered. Adjustment is allowed to the slow-running control screw only.

However, when a new or reconditioned distributor pump is to be fitted, it will be found that the slow-running control screw is loosely attached to the distributor pump and that the maximum output control screw is not sealed.

It is necessary, therefore, after the distributor pump has been assembled to the engine, first to fit the slow-running control screw and then adjust both screws as detailed below.

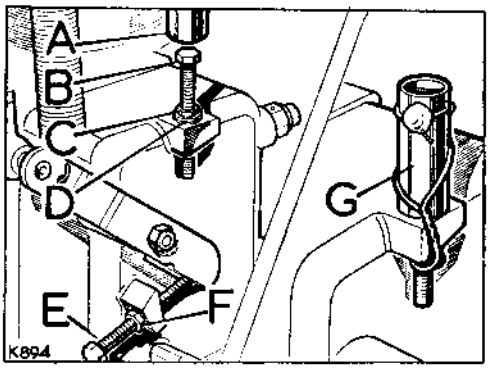


**Fig. A2-63. Distributor pump control screws**

A—Screw collar
B—Maximum output control screw
C—Locknut
D—Screw retainer for collar
E—Slow running control screw
F—Locknut
G—Screw collar shown lockwired after setting

## Operation A2-17—*continued*

1. **Slow-running control screw**

   Adjust the control screw until the engine slow-running speed is 590 ± 20 rpm. This may be checked using a suitable revolution counter, or by adjusting the control screw until the lowest engine speed consistent with smooth, even running is achieved.

2. To adjust the slow-running control screw, proceed as follows:
   (a) Check engine speed with revolution counter.
   (b) Slacken adjusting screw locknut and screw inwards to increase speed and outwards to decrease.
   (c) When a slow-running speed of 590 ± 20 rpm has been obtained, tighten locknut.
   (d) Remove revolution counter.

3. **Maximum output control screw**

   Adjust the control screw, where necessary, until the engine maximum speed is 4200 ± 20 rpm. This may be checked using a suitable revolution counter, or by road test; the road speed equivalent of 4200 rpm being 48 mph (77 kph) in third gear. When maximum engine speed of 4200 ± 20 rpm has been obtained, tighten locknut, replace adjusting screw collar, wire and seal screw collar as shown at Fig. A2-63.

   When satisfactory, refit the engine air cleaner, Operation A2-2 and the bonnet panel, Operation A2-1.

## *Distributor pump drive gears, remove and refit—Operation A2-18

Workshop hand tools:
Spanner sizes: $\frac{5}{16}$ in. AF, $\frac{9}{16}$ in. AF, $\frac{5}{8}$ in. AF, $\frac{1}{2}$ in. AF, $\frac{7}{16}$ in. AF open end
$\frac{5}{8}$ in. AF socket, $\frac{5}{16}$ in. BSF open end
Screwdriver (medium), Pliers (long nosed)

Special tools:
Part No. 605863—Timing gauge for use with later type distributor pump

### To remove

1. Remove bonnet panel. Operation A2-1.
2. Remove air cleaner. Operation A2-2.
3. Remove the external oil filter. Operation A2-16.
4. Remove the distributor pump and short drive shaft. Operation A2-17.
5. Remove the drive gear bush locating screw and withdraw the vertical drive gear, using long-nosed pliers.

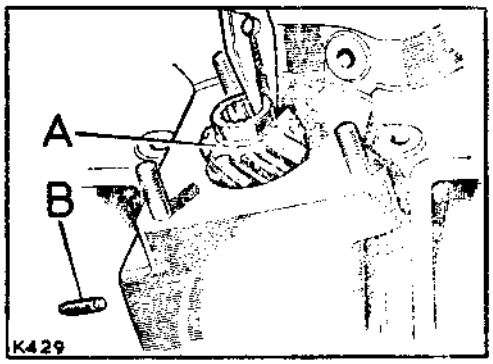


**Fig. A2-64. Vertical drive shaft gear**

A—Vertical drive shaft gear
B—Locating screw housed in tapping at external oil filter locating face

### To refit

**Note:** Distributor pump timing depends upon the vertical drive gear master spline being correctly positioned relative to the flywheel.

Therefore the following procedures to establish this position must be carried out methodically and accurately.

1. Remove the engine top cover.
2. Turn the crankshaft in the direction of rotation until both valves on No. 1 cylinder are fully closed (indicated by clearance between the rocker pads and the valve stems).
3. Continue to turn the crankshaft slowly until the appropriate timing mark on the flywheel is aligned with the timing pointer on the flywheel housing. This must be done carefully. If the flywheel is inadvertently turned too far and the timing mark goes past the pointer, do not turn the flywheel back, but repeat the above operation.

Ensure that a correct line of vision is taken when lining up the timing marks. An incorrect line of vision can result in the timing being 1° to 2° out.

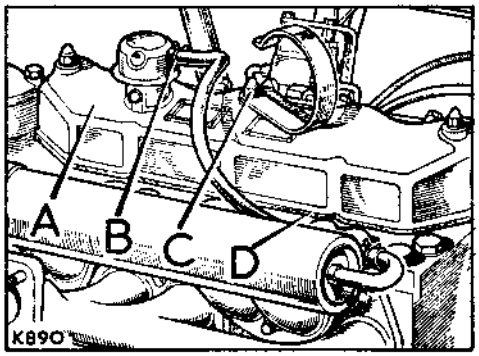


**Fig. A2-65. Engine top cover**

A—Top cover
B—Breather hose fixings
C—Fixings
D—Joint washer

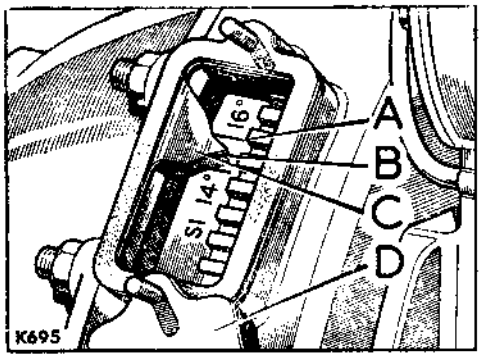


**Fig. A2-66. Timing marks at flywheel**

A—16° mark on flywheel, for early type pumps
B—15° mark on flywheel, for late type pumps
C—Timing pointer
D—Inspection cover on flywheel housing

*Operations marked with an asterisk (*) can be carried out with the engine installed in the vehicle*

## Operation A2-18—*continued*

4. Insert the vertical drive gear assembly into the distributor drive housing and engage the gear on the camshaft. When fitted, the vertical drive gear master spline must be positioned as shown in Fig. A2-67 and the locating screw hole in the drive gear bush must be aligned with the locating screw tapping in the oil filter mounting face.

   As the bush cannot be easily turned when fitted, to align the master spline and bush correctly may require some trial and error fitting.

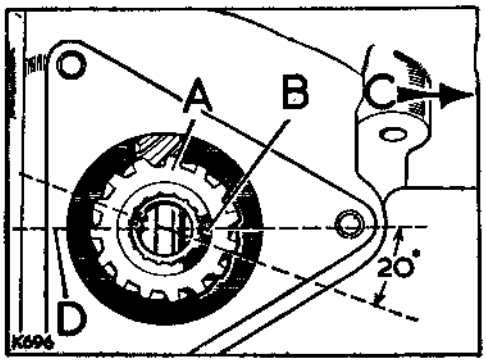


**Fig. A2-67. Vertical drive gear correctly positioned**

A—Vertical drive gear
B—Master spline to be at 20° angle to engine centre line
C—Front of engine
D—Line parallel with engine centre line

5. When the correct position is attained, secure the vertical drive shaft assembly by fitting a new special locating screw in the threaded hole of the block, so that the end of the screw locates the drive gear bush.

   The special screw has a nylon peg fitted, which, when the screw is in position, acts as a locking device. Do not use the original screw under any circumstances.

6. Refit the distributor pump and short drive shaft and carry out the distributor pump timing procedure. Operation A2-17.
7. Refit the external oil filter. Operation A2-16.
8. Refit the air cleaner. Operation A2-2.
9. Refit the bonnet panel. Operation A2-1.

## *Tappet adjustment—Operation A2-19

Workshop hand tools:
Spanner sizes: ½ in. AF ring
Screwdriver (medium), Feeler gauges, Pliers

**Tappets, to adjust**

1. Remove the bonnet panel. Operation A2-1.
2. Remove the air cleaner. Operation A2-2.
3. Remove the engine top cover.

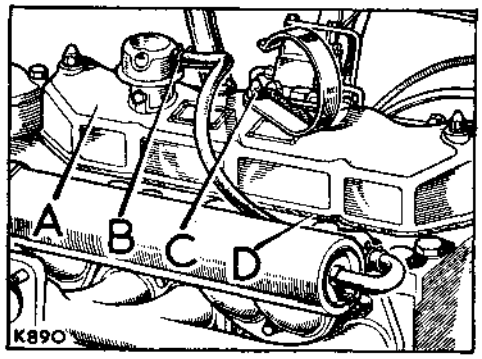


**Fig. A2-68. Engine top cover**

A—Top cover
B—Breather hose fixings
C—Fixings for top cover
D—Joint washer

4. Set the tappet clearances to .010 in. (0,25 mm) for all valves.

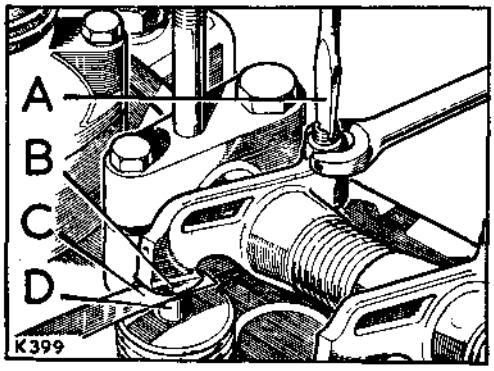


**Fig. A2-69. Setting tappet clearances**

A—Screwdriver
B—Rocker pad
C—Feeler gauge
D—Valve stem

The tappet setting is most easily carried out in the following sequence, No. 1 tappet being at the front of the engine:

Set No. 1 tappet clearance with No. 8 valve fully open.
Set No. 3 tappet clearance with No. 6 valve fully open.
Set No. 5 tappet clearance with No. 4 valve fully open.
Set No. 2 tappet clearance with No. 7 valve fully open.
Set No. 8 tappet clearance with No. 1 valve fully open.
Set No. 6 tappet clearance with No. 3 valve fully open.
Set No. 4 tappet clearance with No. 5 valve fully open.
Set No. 7 tappet clearance with No. 2 valve fully open.

5. Recheck the clearances with the tappet locknuts fully tightened.
6. Refit the engine top cover, Fig. A2-68 refers.
7. Refit the air cleaner. Operation A2-2.
8. Refit the bonnet panel. Operation A2-1.

*Operations marked with an asterisk (*) can be carried out with the engine installed in the vehicle*

## *Valve gear, rocker shaft and push rods, remove and refit—Operation A2-20

*(For overhaul instructions. Operation A2-21 refers)*

Workshop hand tools:
Spanner sizes: ½ in. AF ring, ¾ in. AF socket
Screwdriver (medium), Pliers

Special tools:
Torque wrench

### To remove

1. Remove bonnet panel. Operation A2-1.
2. Remove air cleaner. Operation A2-2.
3. Remove engine top cover.

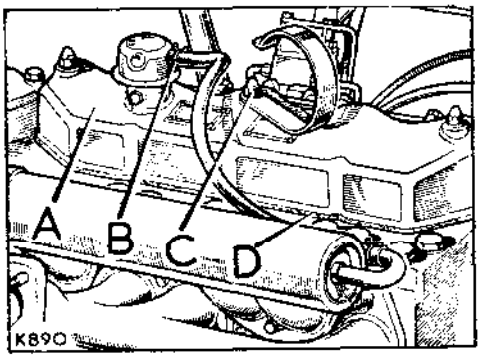


**Fig. A2-70. Engine top cover**

A—Top cover
B—Breather hose fixings
C—Fixings
D—Joint washer

4. Slacken locknuts and turn tappet adjusting screws to disengage from push rods.

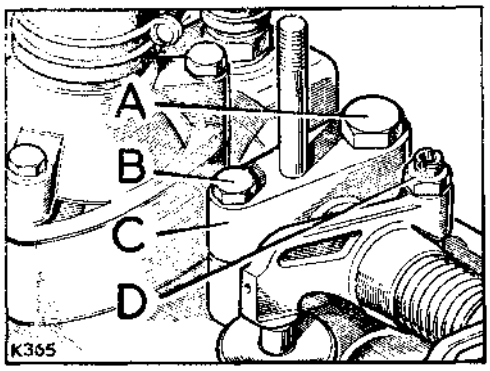


**Fig. A2-71. Rocker shaft fixings**

A—Larger fixings, brackets to engine (5 off)
B—Smaller fixings, shaft to brackets (5 off)
C—Rocker brackets
D—Tappet locknuts and adjusting screws

5. Remove fixings from rocker shaft support brackets. Do not remove shaft assembly at this stage.
6. Invert the engine top cover and secure it to the studs on the rocker brackets. Withdraw the rocker shaft assembly complete, using the engine top cover to retain the assembly.
7. Withdraw the tappet pushrods and retain them in numbered sequence related to the tappet served.

### To refit

1. Fit the tappet push rods to their original bores.
2. Clean the rocker shaft fixing bolt threads of deposits which could become trapped between the cylinder head and gasket.
3. Fit the rocker shaft assembly, located by spigots on the rocker brackets. First engage the smaller fixings, then the larger fixings. Tighten the fixings as follows:
   ½ in. UNF bolts to 90 lb ft (12,5 mkg) torque load.
   $\frac{5}{16}$ in. UNF bolts to 18 lb ft (2,4 mkg) torque load.
4. Check tighten **all** cylinder head ½ in. UNF fixings, in the order shown, to a torque load of 90 lb ft (12,5 mkg).

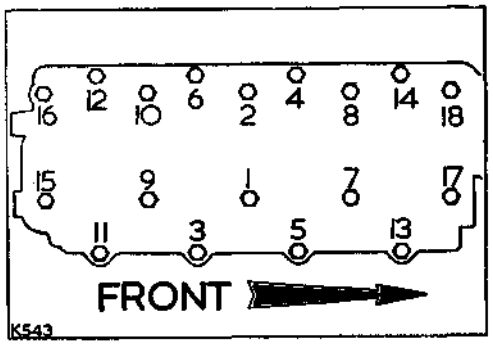


**Fig. A2-72. Order of tightening cylinder head fixings**

*Operations marked with an asterisk (*) can be carried out with the engine installed in the vehicle*

## Operation A2-20—*continued*

5. Fit the tappet screw locknuts and set the tappet clearances to .010 in. (0,25 mm) for all valves.

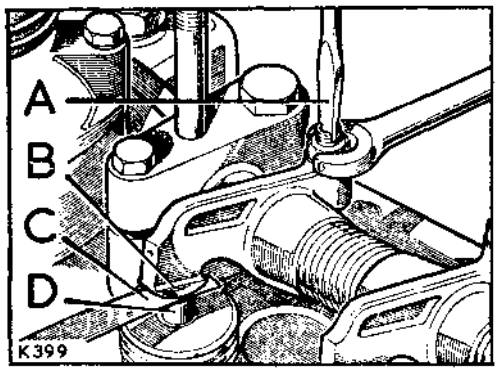


**Fig. A2-73. Setting tappet clearances**

A—Screwdriver C—Feeler gauge
B—Rocker pad D—Valve stem

The tappet setting is most easily carried out in the following sequence, No. 1 tappet being at the front of the engine:

Set No. 1 tappet with No. 8 valve fully open.
Set No. 3 tappet with No. 6 valve fully open.
Set No. 5 tappet with No. 4 valve fully open.
Set No. 2 tappet with No. 7 valve fully open.
Set No. 8 tappet with No. 1 valve fully open.
Set No. 6 tappet with No. 3 valve fully open.
Set No. 4 tappet with No. 5 valve fully open.
Set No. 7 tappet with No. 2 valve fully open.

6. Refit the air cleaner. Operation A2-2.

7. Run the engine until hot then check tighten all of the cylinder head ½ in. UNF fixings to the correct torque loading of 90 lb ft (12,5 mkg). This will necessitate removal of the fuel injectors in order to gain access to all the fixings unless a special cranked adaptor is used. Fuel injector removal and refitting is described in Operation A2-6.

8. Refit the engine top cover, Fig. A2-70 refers.

9. Refit the bonnet panel. Operation A2-1.

## *Valve gear and rocker shaft, overhaul—Operation A2-21

*(For removal and refitting instructions, Operation A2-20 refers)*

Workshop hand tools:
Spanner sizes: ½ in. AF, $\frac{7}{16}$ in. AF ring
Screwdriver (medium)

### To dismantle

1. Remove the tappet adjusting screws from the valve rockers.
2. Withdraw the valve gear from the rocker shaft.

### Inspection

1. Rocker brackets. Ensure the oil feed holes are clear. Inspect the locating dowel spigots; the spigots must be undamaged to ensure a correct fit on the locating dowels in the cylinder head.
2. Valve rockers. Visually inspect the rocker bushes for wear. If necessary, press replacement bushes into the rockers and ream to 0.530 in. + 0.001 in. (13,5 mm + 0,02 mm).

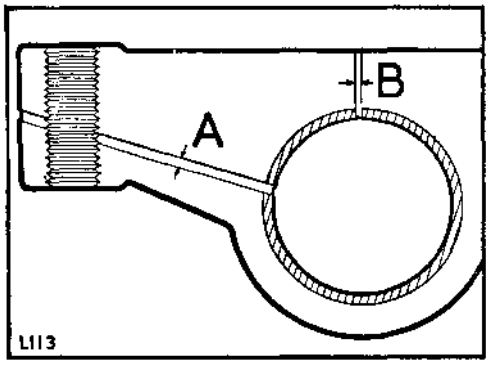


**Fig. A2-74. Sectioned view of valve rocker**

A—Oil feed drilling for tappet adjusting screw
B—Oil outlet drilling for splash lubrication

**Note:** The oil holes in the rocker bushes are pre-drilled and must be aligned with the oil holes in the valve rocker during fitting.

Check that all oil passage drillings are clear.

3. Tappet adjusting screws and locknuts. Examine threads for damage. Check that the oil relief drilling is clear.
4. Inspect the rocker shaft for wear and scores; check that the oil feed holes are clear.
5. Examine the rocker shaft springs, spacing washers and the locating screw for soundness and general condition.

### To assemble

1. Fit an intermediate rocker bracket to the rocker shaft and engage the locating screw through the bracket and into the larger hole in the shaft.
2. Continue assembly by fitting the valve gear and rockers. Refer to the illustration and note the assembled position for the spacing washers and the handed valve rockers.
3. Refit the tappet adjusting screws and locknuts.
4. To refit the valve gear and rocker shaft assembly, refer to Operation A2-20.

## Operation A2-21—*continued*

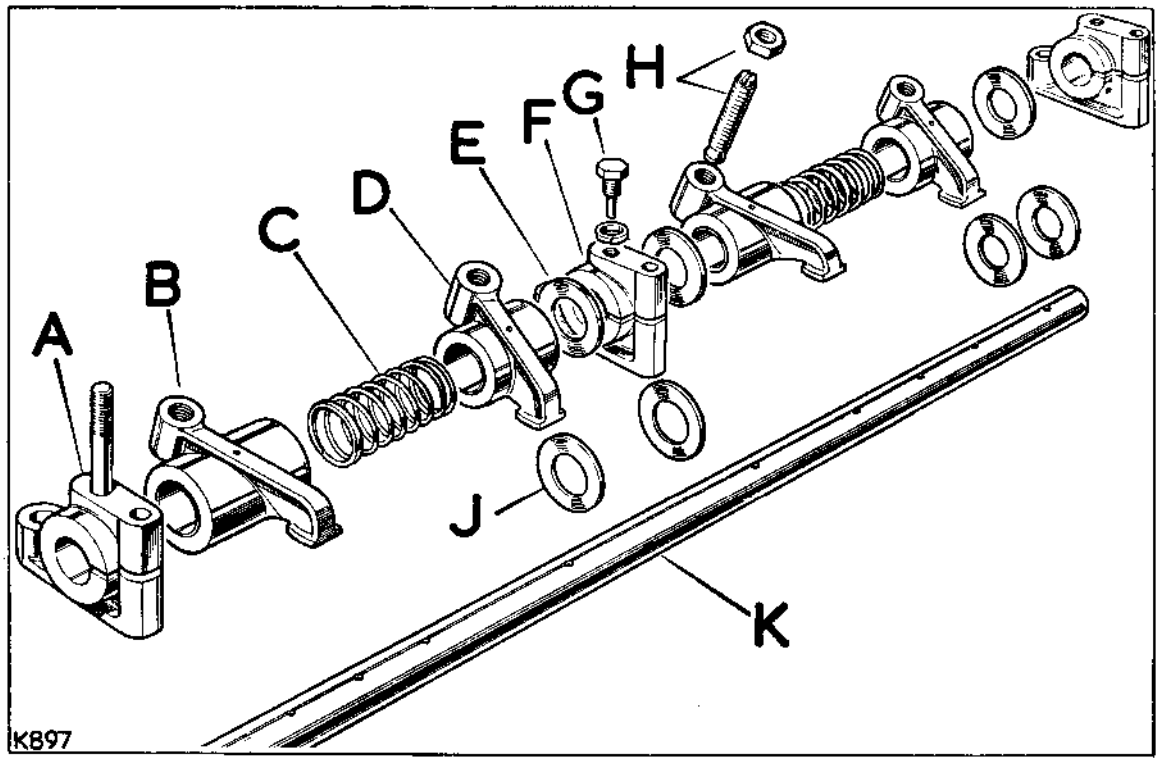


**Fig. A2-75. Valve gear and rocker shaft arrangement**

A—Rocker brackets. Front, centre and rear brackets carry studs for top cover fixings
B—Exhaust valve rockers (4 off)
C—Rocker shaft springs
D—Inlet valve rockers (4 off
E—Spacing washers (6 off thick, petrol models only)
F—Intermediate rocker bracket (2 off)
G—Locating screw for rocker shaft (2 off on early models)
H—Tappet screws adjacent to larger fixing holes in brackets
J—Spacing washers (8 off, thin)
K—Valve rocker shaft (2 off on early models)

## *Cylinder head, remove and refit—Operation A2-22

*(For overhaul information, Operation A2-23 refers)*

Workshop hand tools:
Spanner sizes: $\frac{7}{16}$ in. AF, $\frac{1}{2}$ in. AF, $\frac{3}{8}$ in. AF, $\frac{5}{8}$ in. AF, $\frac{9}{16}$ in. AF open end
$\frac{7}{16}$ in. AF, $\frac{1}{2}$ in. AF, $\frac{5}{8}$ in. AF, $\frac{3}{4}$ in. AF sockets
2 BA open end
Screwdriver (medium), Pliers

Special tools:
Torque wrench

### To remove

1. Remove the bonnet panel. Operation A2-1.
2. Remove air cleaner. Operation A2-2.
3. Disconnect the battery earth lead.
4. Remove the engine top cover.

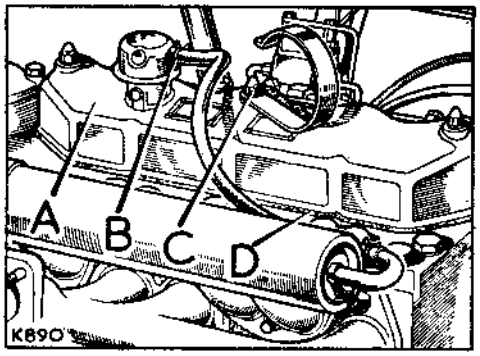


**Fig. A2-76. Engine top cover**

A—Top cover
B—Breather hose fixings
C—Top cover fixings
D—Joint washer

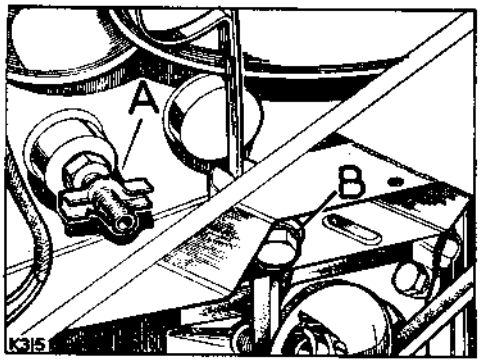


**Fig. A2-77. Coolant system drain points**

A—At engine block
B—At radiator block

5. Remove radiator filler cap and drain the engine coolant.
6. Continue the procedure with the following components, referring to Fig. A2-78 for location details:
   (a) Disconnect fuel return pipe at injector spill pipe.
   (b) Disconnect oil gallery pipe at upper fixing.
   (c) Disconnect heater plugs electrical feed lead.

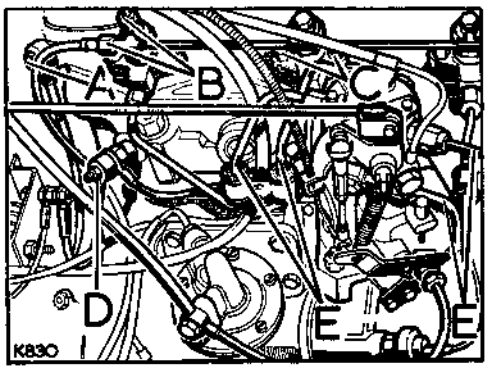


**Fig. A2-78. View of engine, RH side, rear**

A—Oil gallery pipe upper fixing
B—Fuel spill pipe connections
C—Fuel injector fixings
D—Electrical feed for heater plugs
E—Fuel injector feed pipes

7. Carry out the following procedure at the LH side of the engine.
   (a) Disconnect front exhaust pipe from manifold.
   (b) Disconnect heater hoses, if fitted.

*Operations marked with an asterisk (*) can be carried out with the engine installed in the vehicle*

## Operation A2-22—*continued*

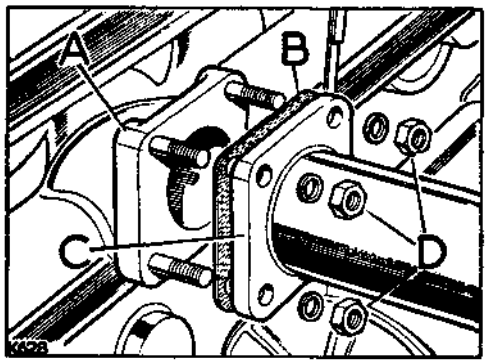


**Fig. A2-79. Front exhaust pipe**

A—Exhaust manifold
B—Joint washer
C—Front exhaust pipe
D—Front exhaust pipe fixings

8. At RH side of engine carry out the following procedure, referring to Fig. A2-80 for location details:

   (a) Disconnect radiator top coolant hose.

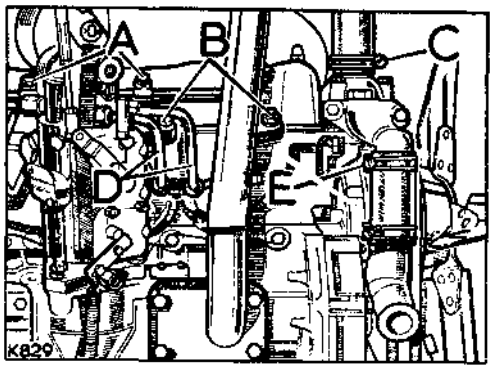


**Fig. A2-80. View of engine, RH side, front**

A—Fuel spill pipe fixings
B—Fuel injector fixings, later type shown. Early types are secured with clamp bars
C—Radiator top hose fixings
D—Fuel injector feed pipes
E—By-pass hose fixings

   (b) Disconnect coolant by-pass pipe.

   (c) Slacken fuel injector feed pipes at distributor pump and disconnect at fuel injectors.

   (d) Slacken fuel spill pipe fixings at fuel injectors.

   (e) Remove the fixings and withdraw the fuel injectors (attached together by the fuel spill pipe) and sealing washers (8 off) from the engine.

   Take care to avoid damage to the needle valves protruding from the injectors. Immerse the injectors in clean fuel pending refitting.

9. Fit inverted top cover to rocker bracket studs, remove assembly complete using top cover as a retainer.

10. Remove the tappet push rods and retain in numbered sequence related to valve served.

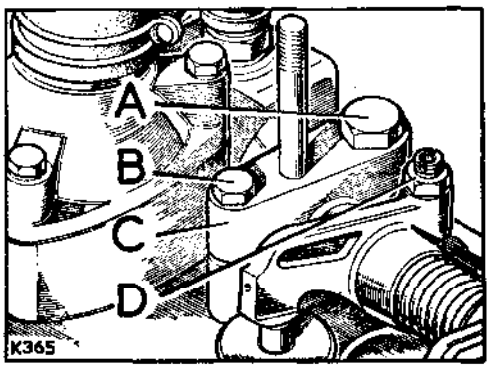


**Fig. A2-81. Rocker shaft assembly**

A—Larger fixings, brackets and cylinder head to engine
B—Smaller fixings, brackets to cylinder head
C—Rocker brackets
D—Slacken locknuts and adjusting screws

11. Slacken evenly and remove the remaining fixings and withdraw the cylinder head and joint gasket.

## Operation A2-22—*continued*

**To refit**

1. Thinly coat the cylinder head gasket with suitable jointing compound such as Hylomar SQ32M. Position the gasket, lettering 'DIESEL' uppermost, on the cylinder block.
2. Position the cylinder head on the gasket and engage the fixings. Do not fully tighten at this stage.
3. Insert the push rods into their parent tappet seats.
4. Refit the valve rocker shaft assembly, located by dowels. Do not fully tighten the fixings at this stage.
5. Tighten the cylinder head ½ in. UNF fixings to a torque load of 90 lb ft (12,5 mkg) in the order shown.

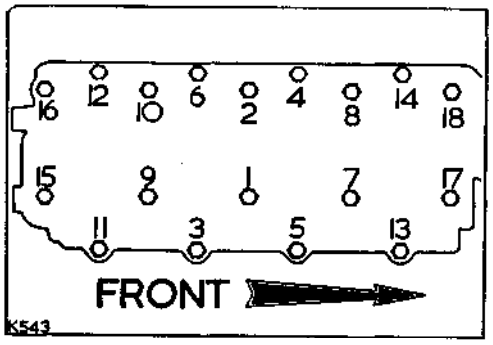


**Fig. A2-82. Order of tightening cylinder head fixings**

6. Tighten the $\frac{5}{16}$ in. UNF fixings securing the valve rocker shaft assembly to a torque loading of 18 lb ft (2,4 mkg), turning down the fixings evenly before final tightening.
7. Refit the fuel injectors, ensuring that the injector sealing washers are correctly fitted as illustrated. Tighten the injector fixings at the clamp bar (early types) or injector mounting flange (later types) to 6 lb ft to 8 lb ft (0,8 mkg to 1,0 mkg). Tighten evenly to avoid distortion and **do not overtighten.**

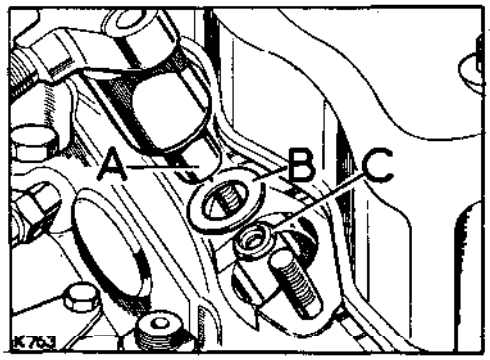


**Fig. A2-83. Fitting fuel injectors**

A—Injector
B—Copper sealing washer
C—Steel washer, fitted with raised portion uppermost

8. Tighten the injector spill pipe at the banjo fixings, connect the injector feed pipes and the pipe from the fuel filter.

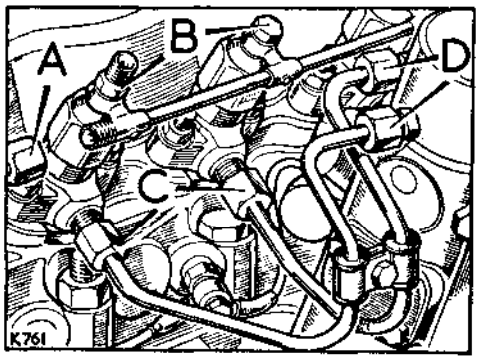


**Fig. A2-84. Fuel pipes at injectors**

A—From fuel filter
B—Spill pipe banjo fixings
C—To injectors (4 off)
D—From fuel distributor pump

9. Refit the heater hoses, if fitted.
10. Connect coolant hoses at radiator and by-pass pipe.

## Operation A2-22—*continued*

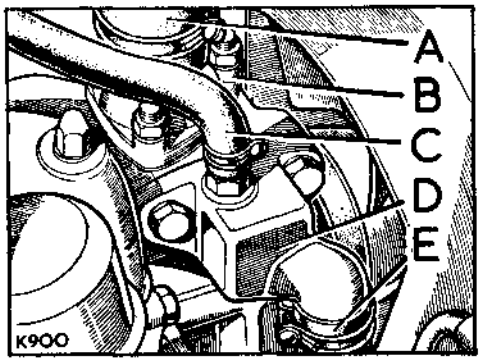


**Fig. A2-85. Coolant hoses**

A—Radiator top hose
B—Thermostat housing
C—Heater hose, if fitted
D—By-pass pipe
E—By-pass hose

11. Replenish the engine coolant system. Allow a full flow of coolant through the drain taps before closing them. See Fig. A2-77.
12. Set the tappet clearances. Operation A2-19.
13. Refit the front exhaust pipe, Fig. A2-79 refers.

**COOLANT SYSTEM**

**Bonneted Control Model, 2½ Litre Diesel**

| | Capacity | Imperial Unit | US Unit | Litres | Antifreeze | Frost Precaution |
|---|---|---|---|---|---|---|
| 88 | 17½ pints | 17½ pints | 21 pints | 10,0 | 33⅓% | —25°F<br>—32°C |
| 109 | 17½ pints | 17½ pints | 21 pints | 10,0 | 33⅓% | —25°F<br>—32°C |

14. Refit the engine top cover, Fig. A2-76 refers.
15. Connect the battery earth lead.
16. Refit the air cleaner. Operation A2-2.
17. Refit the bonnet panel. Operation A2-1.

**Note:** It is most important that the cylinder head fixings torque loading be checked and if necessary reset after the next engine run and with the engine thoroughly warm.

**This will entail removal of fuel injectors** unless a special cranked adaptor spanner is used on the fixings adjacent to the injectors. Failure to do so may cause stresses to the cylinder head leading to cylinder head cracking.

## *Cylinder head, overhaul and decarbonize—Operation A2-23

*(For removal and refitting instructions, Operation A2-22 refers)*

Workshop hand tools:

Spanner sizes: ½ in. AF, $\frac{9}{16}$ in. AF open end
½ in. AF socket
2 BA open end
$\frac{5}{16}$ in. Whit open end
$\frac{7}{16}$ in. AF ring
Screwdriver (medium), Pliers, 1 lb hammer

Special tools:

Valve spring compresser tool, Part No. 276102
Inlet valve guide removal tool, Part No. 274400
Exhaust valve guide removal tool, Part No. 274401
Exhaust valve guide replacement tool, Part No. 600959
Inlet valve guide replacement tool, Part No. 601508
Exhaust seat insert replacement tool, Part No. 530625
Push rod tube replacement tool, Part No. 274399

1. Remove the inlet and exhaust manifolds. Operation A2-8.
2. Remove the thermostat housing. Operation A2-12.

### Valves, springs and guides

1. Using a valve spring compressing tool, Part No. 276102, remove the valve assemblies and retain in related sets.

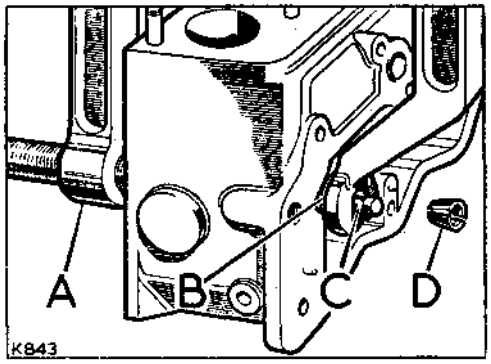


**Fig. A2-86. Valve assemblies removal**

A—Special tool, Part No. 276102, cam operated
B—Valve spring compressed to release split cones
C—Valve stem
D—Split cones, remove before releasing special tool

2. Remove the oil seals from the valve guides.
3. Remove carbon deposits from the valve seats, combustion chambers, valves and also from the piston crowns, using suitable scrapers, abrasive cloth and a wire brush. Take care to prevent dislodged deposits from entering oilways and coolant passages.

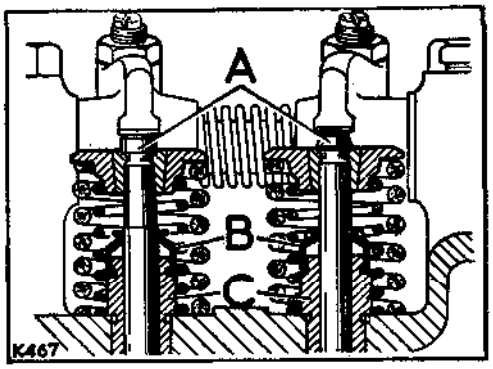


**Fig. A2-87. Valve guides and oil seals arrangement**

A—Valves
B—Oil seals
C—Late type guides shown

4. Clean the combustion deposits from valve guide bores.
5. Check the fit of the valve stems in their respective guide bores by inserting the valve stems into the guides, there should be running clearance but no excessive side-float (see Data for dimensions). If the valve guides are to be replaced, they must be drifted out, using the special tools, Part No. 274400 for inlet guides, Part No. 274401 for exhaust guides.
6. Lubricate the replacement valve guides and their housing bores.
7. Fit the replacement guides to the cylinder head using special drift, Part No. 600959, for exhaust valve guides and special drift, Part No. 601508, for inlet valve guides.
   (a) Early type guides (with internal seating for valve stem oil seals), have three packing washers under the exhaust guide head and two packing washers under the inlet guide head.

## Operation A2-23—*continued*

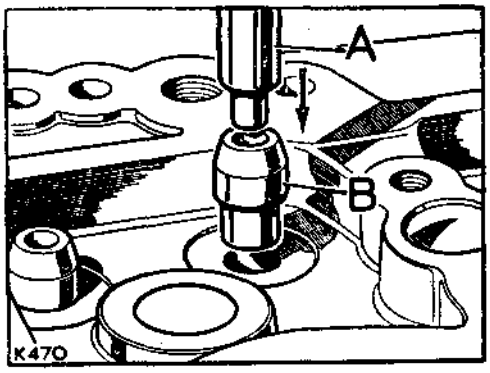


**Fig. A2-88. Fitting replacement valve guides**

A—Special tool, Part No. 600959
B—Valve guide

(b) Later type guides (with external seating for valve stem oil seals), do not require packing washers under the valve guide heads.

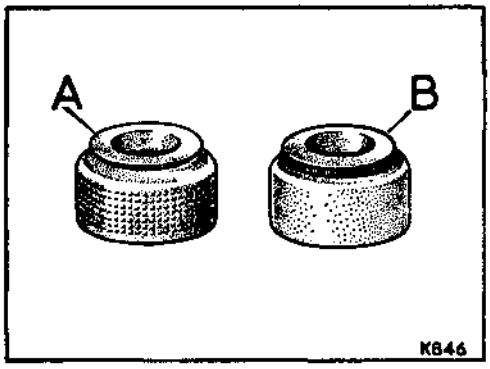


**Fig. A2-89. Later type valve guide seals**

A—Seal for exhaust valve guide
B—Seal for inlet valve guide

The special drifts are so formed to avoid damage to the seal guides. Recheck the valve stem fit, see paragraph 5.

8. Examine the valve springs assemblies. An assembly consists of two springs, the inner spring being an interference fit in the outer spring. If the inner spring is loose, replace the assembly complete.

   Replacement valve springs should be fitted as follows:

   The correct springs for use with the later type valve guides (see Fig. A2 - 87) are identified with a red stripe painted on the spring coils.

   It is permissible to use the later springs on earlier type valve guides provided that the packing washers are removed from under the valve guide heads and the springs are fitted as sets. However, it is recommended that where new springs are to be fitted, earlier type valve guides and the exhaust valves be replaced by the later types. Conversion kits comprising valve guides, exhaust valves and valve springs are available from the Parts Department.

9. If it is necessary to renew the exhaust valve seat inserts, proceed as follows:

   Using a suitable parallel-sided grinding stone, which must be held in the chuck of a bench drill, carefully grind away the insert in one place until only a thin portion remains. Masking the area suitably to prevent fragments flying about, gently tap the thin part of the insert in order to break it into small pieces. Remove the broken parts.

10. For the next part of the operation it is necessary to have the valve guides removed. Clean the seat recess carefully. Obtain a suitable bolt and nut to use in conjunction with a special tool, Part No. 530625, which is a fitting tool for the exhaust seat insert. Using the bolt and fitting tool as illustrated, gently pull the new insert into the seat recess.

## Operation A2-23—*continued*

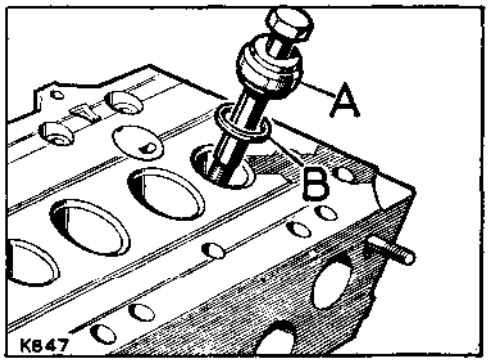


**Fig. A2-90. Fitting valve seat insert**

A—Special tool, Part No. 530625
B—Seat insert

11. It is not necessary to heat the cylinder head or freeze the insert for this operation, but light taps on the bolt head may be required to ensure that the insert enters smoothly. Once the insert is fully in place, carefully press in the guide as previously detailed.

### Valve seats, to reface

1. Reface the valve seats, using suitable cutting or grinding tools. Both inlet and exhaust seat angles are 45°.
2. Using a small amount of grinding paste, lap the valves to their respective seats. Seat tightness is of prime importance, particularly on the 2¼ litre diesel, where the compression ratio is 23.0:1.
3. When lapping is completed, carefully clean off all traces of paste. Ensure that valves are retained in their respective fitting order.

### Push rod tubes

1. For routine cylinder head overhaul it is not normally necessary to remove the push rod tubes.

Should it be necessary to renew the tubes, drift out the old ones using special tool, Part No. 274399. When the tubes are removed they are scrap and new ones must be fitted.

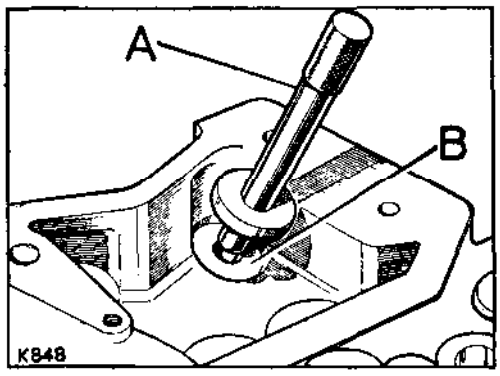


**Fig. A2-91. Removing push rod tubes**

A—Removal drift, Part No. 274399
B—Push rod tube

2. New tubes complete with new sealing rings should be smeared with Silicone MS4 Compound and pressed into the head, from the head face.

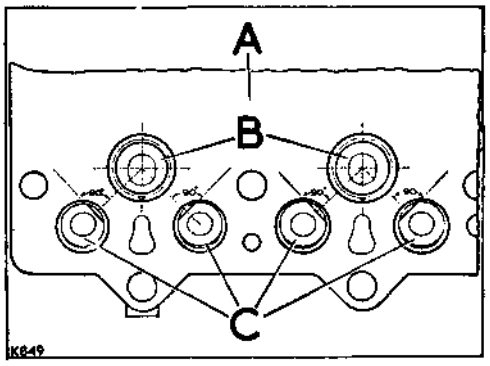


**Fig. A2-92. Correct position of push rod tubes in relation to hot plugs**

A—Cylinder head
B—Hot plug (combustion chamber)
C—Push rod tubes

## Operation A2-23—*continued*

Ensure that the chamfers on the tubes and cylinder head are in full contact and that the 'flat' of the tube is at right-angles to a line drawn between the centre of the push rod tube and the centre of the hot plug, as illustrated. Failure to fit the tubes correctly will result in restriction of coolant flow around the hot plugs.

### Hot plugs (combustion chamber) and injector shrouds

When carrying out normal top overhaul work on the cylinder it is not necessary to remove either the injector shrouds or the hot plugs.

Small surface cracks in the hot plug, extending from the opening to approximately $\frac{5}{16}$ in. (8,0 mm) in length can be ignored. However if any severe cracks appear on the face of the hot plug, before attempting to remove it, closely inspect the cylinder head for signs of cracks, particularly between inlet and exhaust valve seats. Such cracking indicates that the engine has overheated, usually through lack of coolant, and the cylinder head should be scrapped.

1. To remove the hot plug insert a thin soft metal drift through the injector shroud throat and tap the hot plug from the inside. Once removed, the hot plug is scrap, because the drifting operation will damage the pegs inside. The greatest care should be taken to avoid damaging the injector shroud. Should the shroud become damaged, drift the shroud out towards the injector bore, using a suitable round-ended drift.
2. Thoroughly clean out the combustion chamber. The hole in the side of the injector shroud is for manufacturing purposes only, but at the same time can be used as a guide when refitting the shroud.
3. Smear a little oil on the shroud and insert into the cylinder head with the hole pointing towards the centre of the cylinder head, and drift into position, using tool, Part No. 274399.
4. The hot plugs must now be replaced by tapping gently into position with a hide-faced hammer. When fitted they must be checked with a clock gauge to ensure that they do not protrude above the level of the cylinder head face more than .001 in. (0,025 mm) and are not recessed below the level of the cylinder head face more than .002 in. (0,05 mm).

   If the hot plugs are loose in the cylinder head they may be retained with a little grease.

   The fitment of wooden plugs in the injector nozzle apertures will be found advantageous at this stage, to prevent entry of dirt into the combustion chamber.

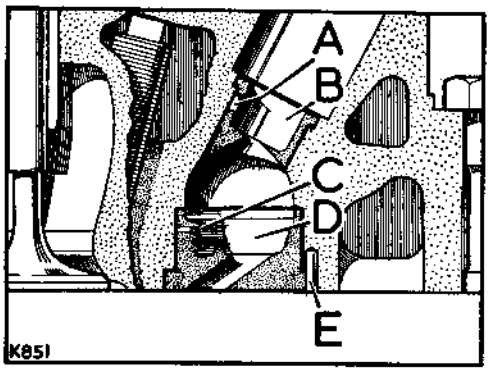


**Fig. A2-93. Cross-section view of injector shroud and hot plug**

A—Position hole toward cylinder head centre line when refitting
B—Injector shroud
C—Swirl holes in hot plug
D—Hot plug
E—Locating peg

### To assemble

1. Assemble the oil seals to the valve guides, Fig. A2-87 refers.
2. Lubricate the valve stems and fit the valves to their respective valve guides.
3. Fit the valve springs and spring caps and, using the special tool, Part No. 276102, compress the springs and fit the split cones to the valve stem waists, Fig. A2-86 refers.
4. Remove the compression tool and ensure the assemblies are seated by tapping sharply on each valve stem end, using a hide-faced mallet.
5. Complete the assembly by refitting the thermostat housing. Operation A2-12, and the manifolds, Operation A2-8.

## *Tappet assemblies, remove and refit—Operation A2-24

Workshop hand tools:
Spanner sizes: ½ in. AF open ended, ¼ in. AF ring
Pliers (cutting), Screwdriver (medium), Feeler gauges

Special tools:
Torque wrench
Tappet guide removal tool, Part No. 530101

### To remove

1. Remove bonnet panel. Operation A2-1.
2. Remove air cleaner. Operation A2-2.
3. Disconnect battery.
4. Remove valve gear, rocker shaft and push rods. Operation A2-20.
5. Remove cylinder head. Operation A2-22.
6. Cut the lockwire and slacken the tappet guide locating bolts at RH side of engine block.
7. Remove the tappet slides, leaving the guides in position to retain the rollers. Remove the rollers using a local made spring clip. Take care to avoid dropping the rollers behind the camshaft.
8. Remove the tappet guides and locating bolts. The use of special tool, Part No. 530101, as illustrated will facilitate this procedure if the guides are difficult to remove by hand.
9. It is advisable to retain the tappet slides, guides and rollers as related sets.

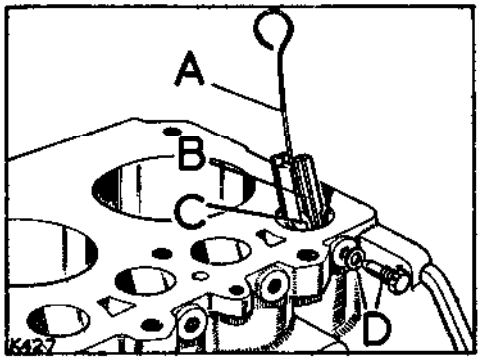


**Fig. A2-94. Removing tappets and rollers**

A—Spring clip
B—Tappet slide
C—Tappet roller
D—Tappet guide locating bolts

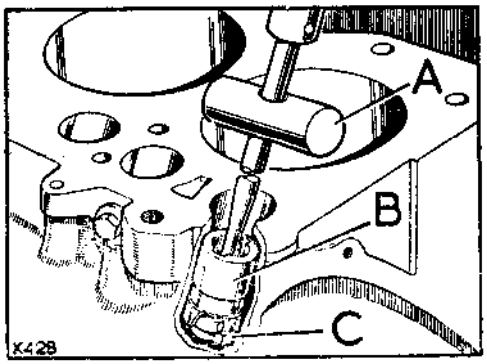


**Fig. A2-95. Removing tappet guides**

A—Special tool, Part No. 530101
B—Tappet guide
C—Extractor adaptor, part of special tool, Part No. 530101

### To refit

1. Fit the tappet guides and engage the locating bolts sufficient to retain the guides.

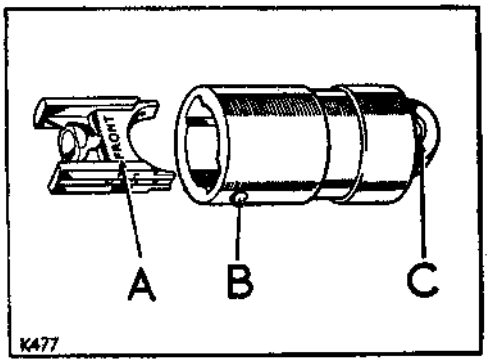


**Fig. A2-96. Tappet slides and rollers**

A—Letters 'FRONT' on slide to be toward front of engine
B—Tappet guide bolt location hole
C—Larger chamfer on roller to be toward front of engine. Latest type roller shown

*Operations marked with an asterisk (*) can be carried out with the engine installed in the vehicle*

## Operation A2-24—*continued*

2. Fit the tappet slides and rollers, positioning the components relative to the front of the engine as illustrated.
3. Tighten the locating bolts and lock together in pairs, using suitable gauge soft iron wire.
4. Fit a replacement gasket, lightly coated with suitable jointing compound such as Hylomar SQ32M, and refit the cylinder head by reversing the removal procedure. Engage the fixings but do not fully tighten.
5. Refit the valve gear, rocker shaft and push rods by reversing the removal procedure. Engage the fixings but do not fully tighten at this stage.
6. Tighten the cylinder head and rocker shaft fixings in the order shown as follows:

   ½ in. UNF bolts—90 lb ft (12,5 mkg) torque load.
   $\frac{5}{16}$ in. UNF bolts—18 lb ft (2,4 mkg) torque load.

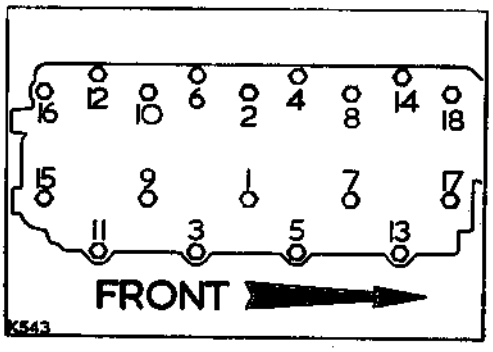


**Fig. A2-97. Order of tightening cylinder head fixings**

7. Set the tappet clearances to .010 in. (0,25 mm) for each valve.

   The tappet setting is most easily carried out in the following sequence, No. 1 tappet being at the front of the engine:

   Set No. 1 tappet clearance with No. 8 valve fully open.
   Set No. 3 tappet clearance with No. 6 valve fully open.
   Set No. 5 tappet clearance with No. 4 valve fully open.
   Set No. 2 tappet clearance with No. 7 valve fully open.
   Set No. 8 tappet clearance with No. 1 valve fully open.
   Set No. 6 tappet clearance with No. 3 valve fully open.
   Set No. 4 tappet clearance with No. 5 valve fully open.
   Set No. 7 tappet clearance with No. 2 valve fully open.

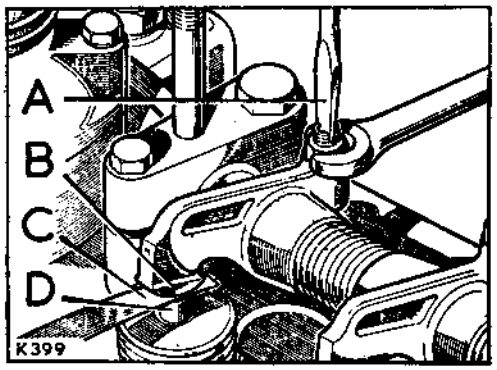


**Fig. A2-98. Setting tappet clearances**

A—Screwdriver
B—Rocker pad
C—Feeler gauge
D—Valve stem

8. Refit the air cleaner. Operation A2-2.
9. Refit the battery lead.

   **Note:** It is most important that the cylinder head fixings torque loading be checked and, if necessary, reset after an engine run, that is with the engine hot. This will entail removal of the fuel injectors to obtain full access to the cylinder head fixings.
10. Refill the engine coolant system.

**COOLANT SYSTEM**

**Bonneted Control Model, 2½ Litre Diesel**

| | Capacity | Imperial Unit | US Unit | Litres | Antifreeze | Frost Precaution |
|---|---|---|---|---|---|---|
| 88 | 17½ pints | 17½ pints | 21 pints | 10,0 | 33⅓% | —25°F<br>—32°C |
| 109 | 17½ pints | 17½ pints | 21 pints | 10,0 | 33⅓% | —25°F<br>—32°C |

11. Refit the bonnet panel. Operation A2-1.

## *Engine front cover and oil seal, remove and refit—Operation A2-25

Workshop hand tools:
Spanner sizes: 2 BA open end
$\frac{1}{2}$ in. AF socket
$\frac{1}{2}$ in. AF, $\frac{7}{16}$ in. AF open ended
Screwdriver (medium), Pliers

Special tools:
Spanner for starter dog, Part No. 530102

**To remove**

1. Remove bonnet. Operation A2-1.

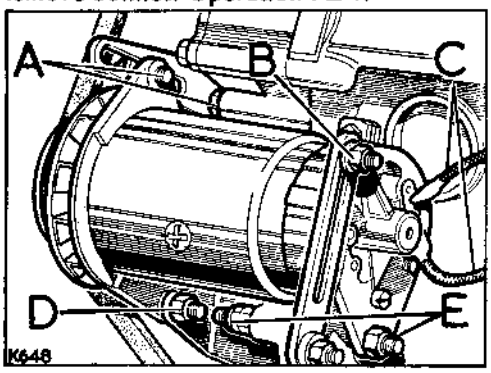


**Fig. A2-99. Dynamo fixings**
A—Adjusting link fixings, front
B—Adjusting link fixing, rear
C—Dynamo leads
D—Fixings at front support
E—Fixings at special stud

2. Remove radiator and grille panel. Operation A2-3.

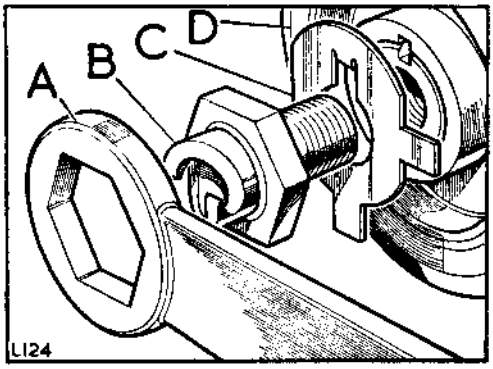


**Fig. A2-100. Fan belt driving pulley fixings**
A—Special tool, Part No. 530102, for starter dog
B—Starter dog
C—Lock plate
D—Fan belt driving pulley, key located

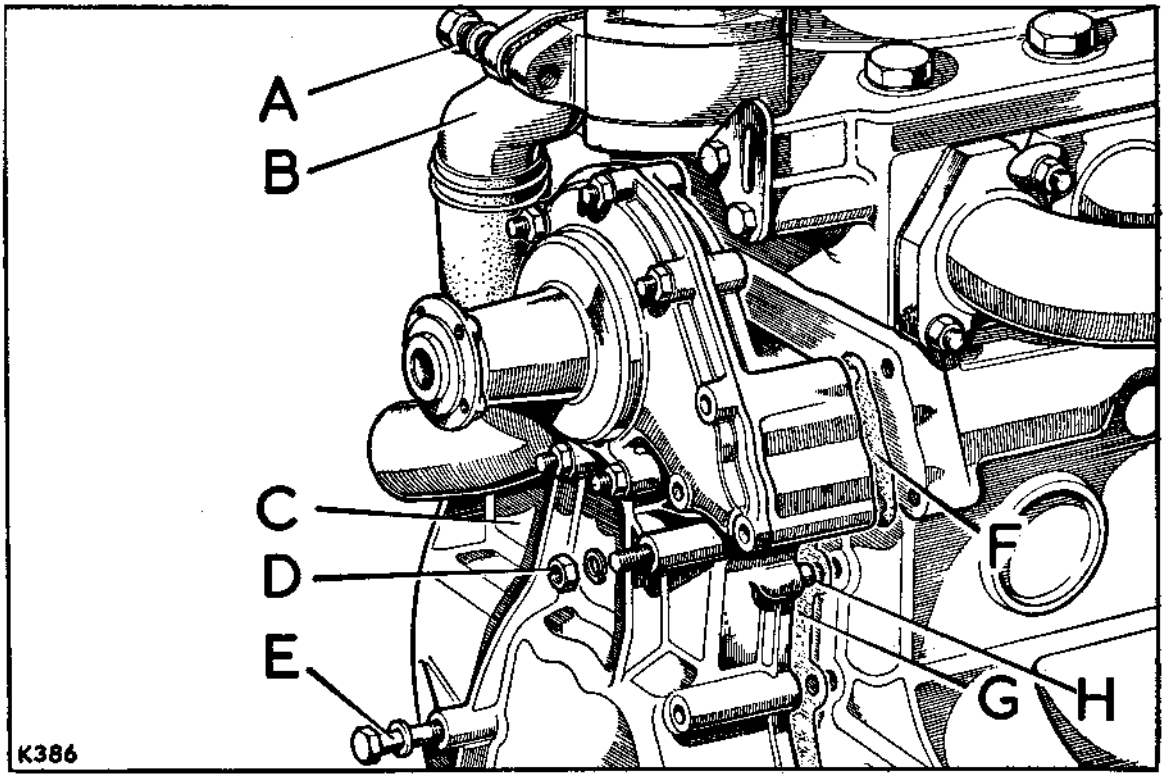


**Fig. A2-101. Front cover and bracket fixings**
A—Fixings
B—By-pass pipe and joint washer
C—Front cover
D—Dynamo link fixings
E—Front cover fixings
F—Joint washer
G—Joint washer
H—Locating dowels (2 off)

*Operations marked with an asterisk (*) can be carried out with the engine installed in the vehicle.*

## Operation A2-25—*continued*

3. Slacken dynamo fixings and remove fan belt.
4. Remove dynamo adjusting link.
5. Remove the starter dog and fan belt driving pulley.
6. Remove the fan blades and fan pulley.
7. Separate the by-pass pipe from the thermostat housing.
8. Remove the front cover fixings, including those at the sump front flange.
9. Remove the front cover and water inlet joint gaskets.

### Oil seal

If a replacement oil seal is required, proceed as follows:

1. Carefully lever the oil seal metal casing away from the housing bore sufficient to collapse the seal and allow its removal. Use a screwdriver or suitable metal strip as a lever.

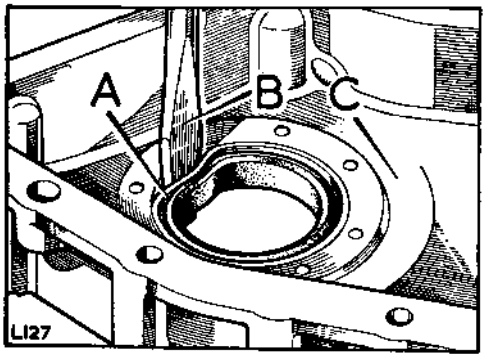


**Fig. A2-102. Oil seal removal**

A—Oil seal, shown collapsed
B—Suitable lever
C—Front cover inner face

### Oil seal, to fit

1. Apply a thin coating of suitable jointing compound such as Hylomar SQ 32M, to the oil seal metal surfaces.
2. Locate the oil seal squarely in the housing bore with the garter spring toward the operator and press fully in.

### Front cover, to refit

1. It is of advantage temporarily to remove the fixing stud from the cylinder block front face. This will enable the front cover to be lifted sufficient to clear the edge of the sump gasket when offering the front cover to the engine.
2. Smear general purpose grease on both sides of the front cover and water inlet joint washers.
3. Continue the refitting by reversing the removal procedure, noting that the front cover is located to the cylinder block by dowels, Fig. A2-101 refers.
4. Refit the fixing stud, if previously removed, from the front of the engine.
5. Refit the fan blades and pulley.
6. Fit the starter dog and pulley, Fig. A2-100 refers. The correct torque loading for the starter dog is 150 lb ft (20,5 mkg).
7. Complete the refitting by reversing the removal procedure for the remaining items. Set the fan belt tension to $\frac{5}{16}$ in. to $\frac{7}{16}$ in. (8 mm to 11 mm), checked by thumb pressure applied to the fan belt between the fan pulley and crankshaft pulley, when finally tightening the dynamo fixings.
8. Refill the engine coolant system.

**COOLANT SYSTEM**

**Bonneted Control Model, 2¼ Litre Diesel**

| | Capacity | Imperial Unit | US Unit | Litres | Antifreeze | Frost Precaution |
|---|---|---|---|---|---|---|
| 88 | 17½ pints | 17½ pints | 21 pints | 10,0 | 33⅓% | —25°F<br>—32°C |
| 109 | 17½ pints | 17½ pints | 21 pints | 10,0 | 33⅓% | —25°F<br>—32°C |

## *Timing chain tensioner, remove, inspect and refit—Operation A2-26

Workshop hand tools:
Spanner sizes: ½ in. AF, ⅝ in. AF socket, $\frac{7}{16}$ in. x ½ in. AF open end (2 off), 2 BA open end
Screwdriver (medium), Pliers

### To remove

1. Remove bonnet panel. Operation A2-1.
2. Remove radiator and grille panel. Operation A2-3.
3. Turn the crankshaft in the direction of rotation until the timing marks are aligned as illustrated.

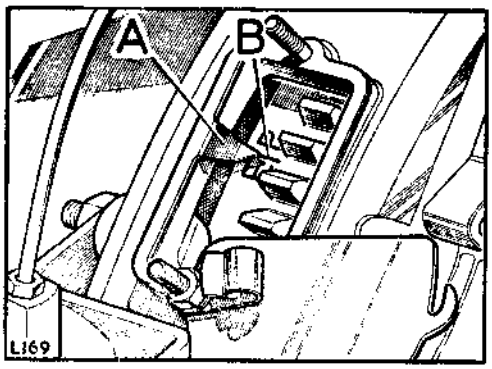


**Fig. A2-103. Timing marks**

A—Timing pointer
B—Align mark on flywheel with pointer in bell housing aperture

4. Remove engine front cover. Operation A2-25.
5. Remove the fixings and withdraw the tensioner ratchet and spring from the piston housing.
6. Remove the piston housing fixings, compress the tensioner spring by hand and withdraw the tensioner arrangement complete.

### To dismantle and inspect

1. Remove the non-return valve ball and retainer from the piston housing.
2. Clean the components, using clean fuel.
3. Replace piston and housing if unduly worn.
4. If the tensioner cylinder bush is unduly worn, the cylinder and bush complete must be renewed.
5. Replace the idler wheel and ratchet arm if the bushes are unduly worn.
6. Inspect the rubber pad on the chain vibration damper on the engine block and replace if grooved.

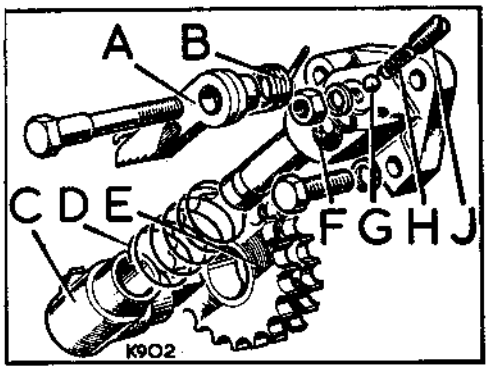


**Fig. A2-104. Timing chain tensioner details**

A—Ratchet
B—Ratchet spring
C—Cylinder
D—Chain tensioner spring
E—Idler wheel
F—Piston
G—Non-return ball valve
H—Spring retainer
J—Plug

7. Ensure that all oil passage drillings are clear.

### To assemble

1. Reverse the removal procedure.

### To refit

1. Assemble together the piston housing, tensioner spring, cylinder and idler wheel. Compress the assembly against the tensioner spring.
2. Offer up the assembly to the engine, locating the piston housing on the dowels and the cylinder spigot on the location slot.
3. Fit the ratchet and spring and allow the idler wheel to take up the timing chain slack.

*Operations marked with an asterisk (*) can be carried out with the engine installed in the vehicle*

## Operation A2-26—*continued*

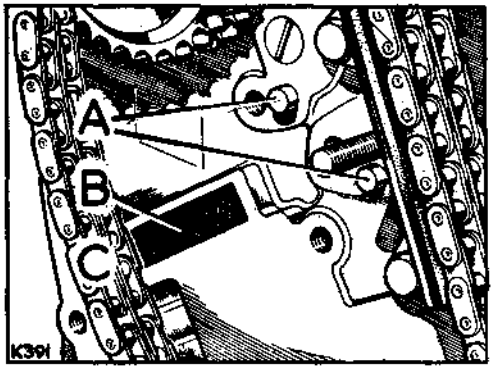


**Fig. A2-105. Timing chain tensioner location details**

A—Piston housing location dowels
B—Location slot for cylinder
C—Timing chain

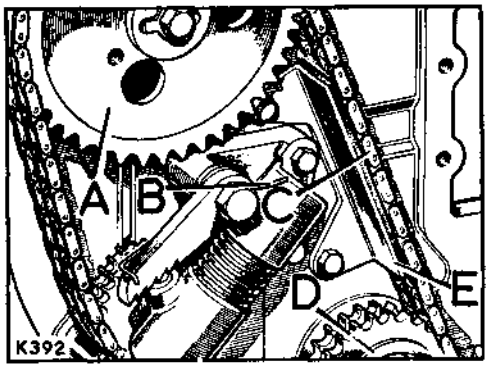


**Fig. A2-106. Timing chain and chainwheel arrangement**

A—Camshaft chainwheel
B—Ratchet spring
C—Timing chain, 'no slack' at this side
D—Crankshaft chainwheel
E—Vibration damper

4. Refit the front cover. Operation A2-25.
5. Ensure that the timing marks are still correctly aligned at the flywheel. Then providing the camshaft has not been rotated this will ensure that the engine valve timing has not been inadvertently disturbed. If there is any doubt, check as detailed in valve timing procedure, Operation A2-27.
6. Complete the refitting by reversing the removal procedure.
7. Refill the engine coolant system.

**COOLANT SYSTEM**
**Bonneted Control Model, 2¼ Litre Diesel**

| | Capacity | Imperial Unit | US Unit | Litres | Antifreeze | Frost Precaution |
|---|---|---|---|---|---|---|
| 88 | 17½ pints | 17½ pints | 21 pints | 10,0 | 33⅓% | —25°F<br>—32°C |
| 109 | 17½ pints | 17½ pints | 21 pints | 10,0 | 33⅓% | —25°F<br>—32°C |

## *Timing gears and chain, remove and refit—Operation A2-27

**This Operation includes valve timing procedure**

Workshop hand tools:
Spanner sizes: $\frac{7}{16}$ in. x $\frac{1}{2}$ in. AF open end (2 off)
$\frac{1}{2}$ in. AF, $\frac{5}{8}$ in. AF socket
2 BA open end
Screwdriver (medium), Pliers

Special tools:
Chainwheel extractor, Part No. 507231
Dial test indicator and bracket

### To remove

1. Remove bonnet panel. Operation A2-1.
2. Remove radiator and grille panel. Operation A2-3.
3. Remove the engine front cover. Operation A2-25.
4. Remove timing chain tensioner. Operation A2-26.
5. Lift off the timing chain and remove the chainwheels, using special extractor tool, Part No. 507231, to withdraw the camshaft chainwheel.

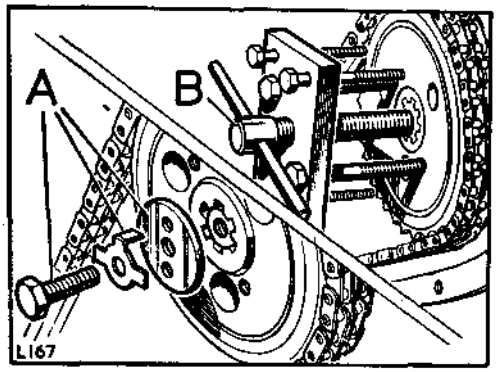


**Fig. A2-107. Chainwheels and fixings**

A—Camshaft chainwheel fixings
B—Extractor, Part No. 507231

6. Inspect the chainwheels and timing chain for damage and general condition.

### To refit and set valve timing

1. Remove the engine top cover.
2. Remove the inspection cover plate from the flywheel housing.
3. Fit the crankshaft chainwheel, key located.

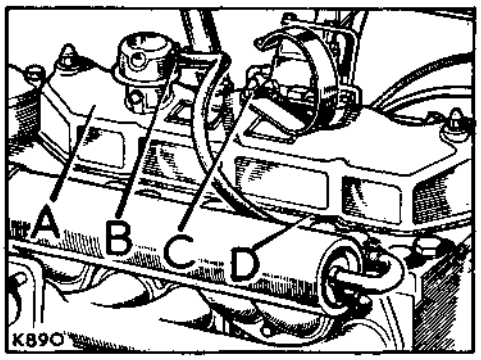


**Fig. A2-108. Top cover**

A—Top cover
B—Breather hose fixings
C—Fixings for top cover
D—Joint washer

4. Turn the crankshaft in direction of rotation until the EP mark on flywheel is in line with timing pointer.
5. Fit the camshaft chainwheel on to the camshaft splines. Do not lock the fixings at this stage.

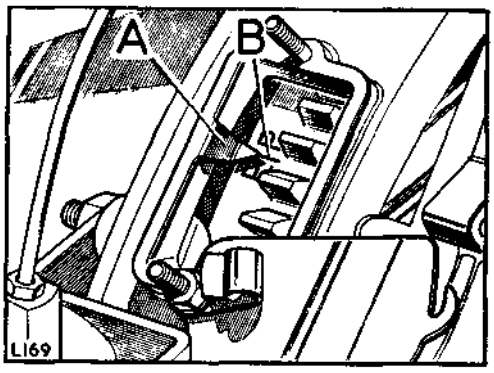


**Fig. A2-109. Timing marks**

A—Pointer at flywheel housing
B—EP mark on flywheel

*Operations marked with an asterisk (*) can be carried out with the engine installed in the vehicle*

## Operation A2-27—*continued*

6. Rotate the camshaft until No. 1 cylinder exhaust valve is fully closed and set the tappet clearance to .010 in. (0,25 mm).

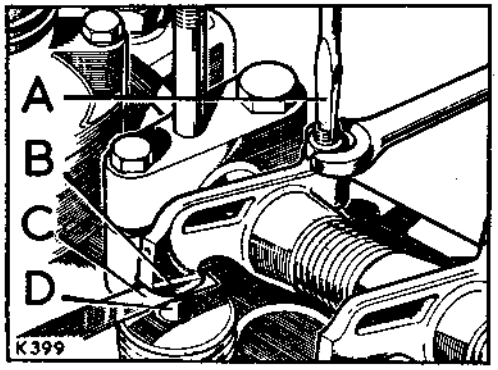


**Fig. A2-110. Adjusting tappet**

A—Screwdriver C—Feeler gauge
B—Rocker pad D—Valve stem

7. Fit a dial test indicator so that the 'fully open' position of the valve can be ascertained.

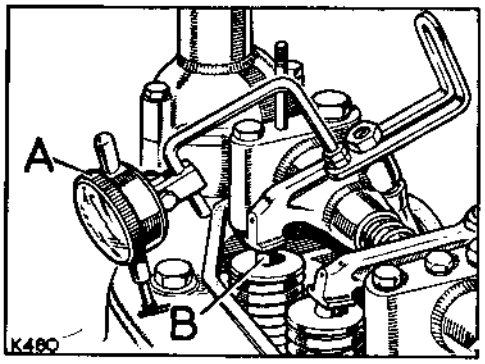


**Fig. A2-111. Dial test indicator in position**

A—Dial test indicator
B—No. 1 cylinder exhaust valve

8. Turn the camshaft in direction of rotation until the rocker pad has nearly opened the valve fully. Stop camshaft rotation and suitably mark the chainwheel and the timing casing relative to each other.

9. Note the reading on the dial test indicator then further turn the camshaft in direction of rotation until the dial test indicator needle has reached the same position as previously noted. Stop rotation of camshaft.

10. Suitably mark the chainwheel adjacent to the mark previously made on the timing casing, then make a third mark to bisect the angle between the two previously made marks.

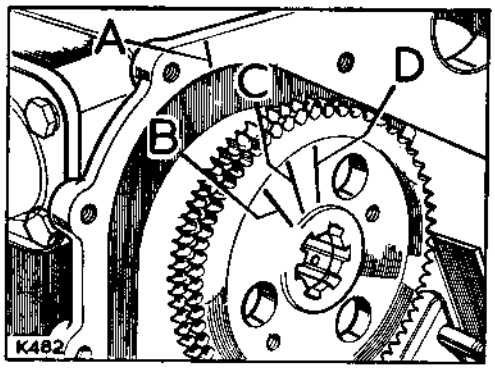


**Fig. A2-112. Chainwheel marking—Stage II**

A—Mark on timing casing
B—Second mark on chainwheel
C—Mark between two previously made marks on chainwheel
D—Mark first made on chainwheel

11. Turn the camshaft against the direction of rotation and align the third (middle) mark with the mark on the timing casing. No. 1 exhaust valve is now fully open.

12. Fit the timing chain to the chainwheels with 'no slack' on the driving side.

    If the chain is slack when fitted it is necessary to reposition the camshaft chainwheel on the camshaft splines which are off-set to allow for this adjustment. It will then be advisable to recheck the valve timing. Lock the camshaft chainwheel fixings when satisfactory.

13. Refit the timing chain tensioner. Operation A2-26.

## Operation A2-27—*continued*

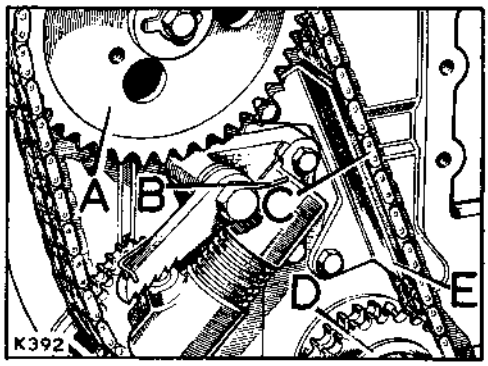


**Fig. A2-113. Fitting the timing chain**

A—Camshaft chainwheel
B—Ratchet spring
C—Timing chain, 'no slack' at this side
D—Crankshaft chainwheel
E—Vibration damper

14. Refit the engine front cover. Operation A2-25.
15. Refit the radiator and grille panel. Operation A2-3.
16. Refill the engine coolant system, allowing a full flow through the coolant drain taps before closing them.

**COOLANT SYSTEM**
**Bonneted Control Model, 2¼ Litre Diesel**

| | Capacity | Imperial Unit | US Unit | Litres | Antifreeze | Frost Precaution |
|---|---|---|---|---|---|---|
| 88 | 17½ pints | 17½ pints | 21 pints | 10,0 | 33⅓% | —25°F<br>—32°C |
| 109 | 17½ pints | 17½ pints | 21 pints | 10,0 | 33⅓% | —25°F<br>—32°C |

17. Refit the bonnet panel. Operation A2-1.

## *Crankcase sump, remove and refit—Operation A2-28

Workshop hand tools:
Spanner sizes: ½ in. AF ring, $\frac{7}{16}$ in. BSF socket

### To remove

1. Drain off the engine lubricating oil.
2. Remove the fixings, lower and withdraw the sump.

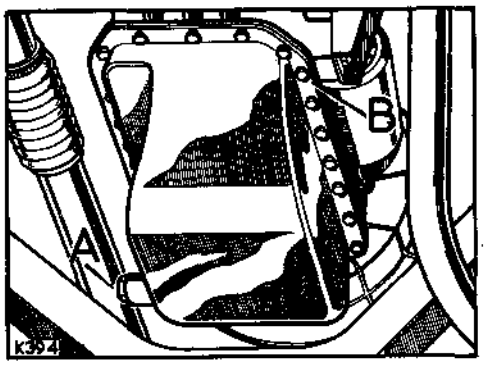


**Fig. A2-114. View of crankcase sump**
A—Drain plug B—Sump fixings

### To refit

1. Fit a new joint washer and reverse the removal procedure.
2. Replenish engine lubricating oil to 'high' mark on dipstick and check level after engine run.

**ENGINE LUBRICANT CAPACITY**
**Bonneted Control Model, 2¼ Litre Diesel**

| | | Capacity | Imperial Unit | US Unit | Litres |
|---|---|---|---|---|---|
| 88 | Engine .... .... | 11 pints | 11 pints | 13 pints | 6.0 |
| | Filter .... .... | 1½ pints | 1½ pints | 1.8 pints | 0.85 |
| | Engine and Filter .... | 12½ pints | 12½ pints | 14.8 pints | 6.85 |
| 109 | Engine .... .... | 11 pints | 11 pints | 13 pints | 6.0 |
| | Filter .... .... | 1½ pints | 1½ pints | 1.8 pints | 0.85 |
| | Engine and Filter .... | 12½ pints | 12½ pints | 14.8 pints | 6.85 |

*Operations marked with an asterisk (*) can be carried out with the engine installed in the vehicle*

## *Oil pump, remove and refit—Operation A2-29

*(For overhaul instructions, Operation A2-30 refers)*

Workshop hand tools:
Spanner sizes: ½ in. AF socket, $\frac{7}{16}$ in. BSF socket, ½ in. AF ring

### To remove

1. Remove crankcase sump. Operation A2-28.
2. Remove the oil pump assembly complete with drive shaft.

### To refit

1. Offer up the pump and drive shaft and engage the drive splines at the engine. Fit the fixings and secure.
2. Fit the crankcase sump and joint gasket.
3. Fill sump with clean oil to 'high' mark on dipstick. Check level and add oil if necessary after engine run.

**ENGINE LUBRICANT CAPACITY**
**Bonneted Control Model, 2¼ Litre Diesel**

| | | Capacity | Imperial Unit | US Unit | Litres |
|---|---|---|---|---|---|
| 88 | Engine .... .... | 11 pints | 11 pints | 13 pints | 6,0 |
| | Filter .... .... | 1¾ pints | 1¾ pints | 1.8 pints | 0,85 |
| | Engine and Filter .... | 12¾ pints | 12¾ pints | 14.8 pints | 6,85 |
| 109 | Engine .... .... | 11 pints | 11 pints | 13 pints | 6,0 |
| | Filter .... .... | 1¾ pints | 1¾ pints | 1.8 pints | 0,85 |
| | Engine and Filter .... | 12¾ pints | 12¾ pints | 14.8 pints | 6,85 |

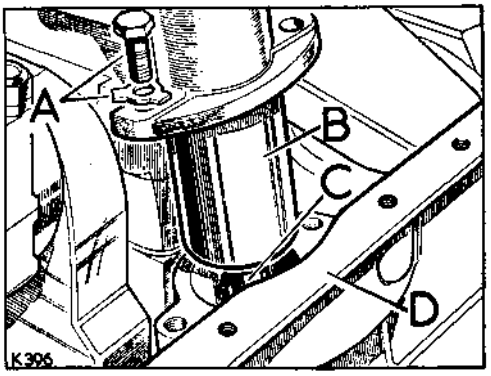


**Fig. A2-115. Oil pump and drive shaft**

A—Fixings
B—Oil pump
C—Drive shaft, longer splines engaged in pump
D—Sump joint face

## *Oil pump, overhaul—Operation A2-30

*(For removal and refitting instructions, Operation A2-29 refers)*

Workshop hand tools:
Spanner sizes: $\frac{9}{16}$ in. AF, $\frac{15}{16}$ in. AF socket, $1\frac{1}{8}$ in. AF open end
$\frac{1}{2}$ lb Hammer, Flat ended drift, Feeler gauges

### To dismantle

1. Unscrew the union nut and withdraw filter from pump.
2. Remove the fixings and withdraw the cover from the body.

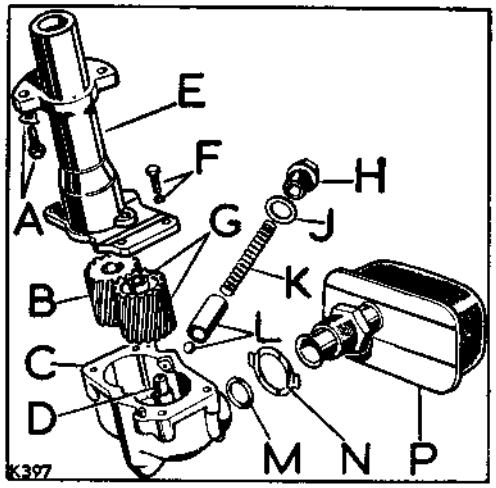


**Fig. A2-116. View of oil pump**

A—Fixings, oil pump to cylinder block
B—Drive gear
C—Oil pump body
D—Spindle for idler gear
E—Pump cover and shaft housing
F—Fixings, cover to body
G—Idler gear and bush assembly
H—Plug
J—Washer
K—Spring
L—Relief valve ball and plunger
M—Sealing ring
N—Lockwasher
P—Oil filter

3. Withdraw the oil pump gears.
4. Remove the oil pressure relief valve components.
5. Clean all components and inspect for general condition.
6. Check the radial clearance and end-float of the gears as illustrated.

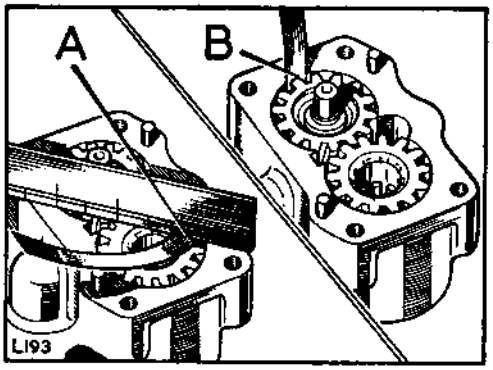


**Fig. A2-117. Checking clearance of oil pump gears**

A—Checking end-float
B—Checking radial clearance

### Clearances

| | | |
|---|---|---|
| End-float, steel gear | .. | .002 in. (0,05 mm) to .005 in. (0,13 mm) |
| End-float, aluminium gear | | .003 in. (0,07 mm) to .006 in. (0,15 mm) |
| Radial clearance of gears | .. | .001 in. (0,02 mm) to .004 in. (0,10 mm) |
| Backlash of gears | .. .. | .006 in. (0,15 mm) to .012 in. (0,30 mm) |

7. If necessary the idler gear bush may be renewed. Press the new bush into the gear, drill the lubrication hole .125 in. (3,175 mm) and ream the bush to .5 in. (12,7 mm).
8. Inspect the pressure relief valve ball seating and renovate, if necessary, using a locally manufactured lapping tool as illustrated.
9. The lapping tool may be installed in a drilling machine or hand brace and the ball seating refaced, using coarse grinding paste. The tool may then be removed and used to 'hand lap' the ball seating with fine grinding paste to a good finish. The seat must then be thoroughly cleaned.

*Operations marked with an asterisk (*) can be carried out with the engine installed in the vehicle*

## Operation A2-30—*continued*

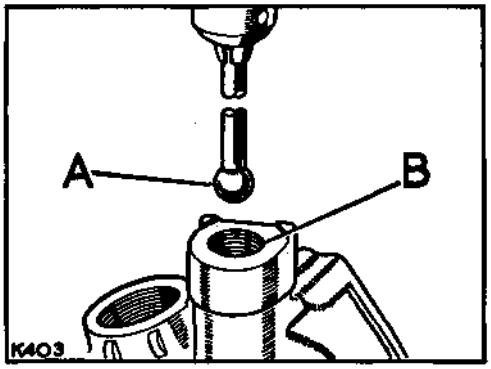


**Fig. A2-118. Lapping tool for ball valve seat**

A—Steel ball, Rover Part No. 3748, soldered to suitable tubing
B—Relief valve housing

**To assemble**

1. Fit the pump gears to the body with the plain portion of the drive gear centre bore uppermost.
2. Smear the joint faces with suitable jointing compound and fit the pump cover to the pump body, locating on the dowels.
3. Assemble the pressure relief valve components to the housing bore. Keep the bore vertical until the ball valve is retained. When fitting the plunger, insert the end with the integral ball seating first.
4. Fit the oil filter to the pump, Fig. A2-116 refers.
5. Position the filter such that it will be square to the sump baffle plate when fitted and secure with the lockwasher.

## *Clutch assembly and flywheel, remove and refit—Operation A2-31

*(For overhaul instructions, Section B refers. For flywheel data see Engine detail data at end of this Section)*

Workshop hand tools:
Spanner sizes: ½ in. AF, 7/16 in. AF, ⅝ in. AF socket
7/16 in. AF open end
7/16 in. BSF open end
1 lb Hammer, Small chisel, Feeler gauge

Special tools:
Clutch plate alignment gauge, Part No. 605022
Torque wrench

### To remove

**Note:** If it is required to remove the clutch only, it is not necessary to remove the seat base nor completely remove the gearbox. Proceed with the gearbox removal, Operation C1-3, but only withdraw the gearbox rearward approximately 5 in. (127 mm), to give access to the clutch fixings.

1. Remove the front floor. Operation A2-4.
2. Remove the gearbox complete, as detailed in Section C.

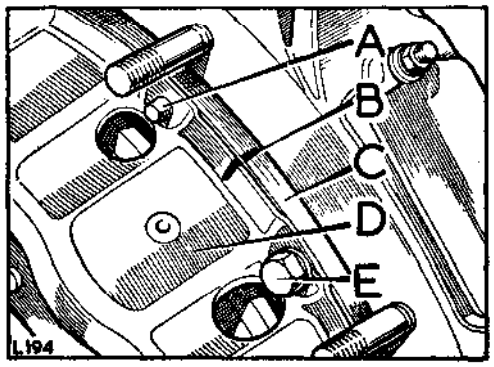


**Fig. A2-119. Clutch assembly fixings**

A—Locating dowel
B—Suitably mark clutch cover relative to flywheel
C—Flywheel
D—Clutch assembly
E—Fixings for clutch (6 off)

3. Mark the position of the clutch assembly cover plate in relation to the flywheel. The marks are for use during subsequent refitting, when, with the marks aligned, the original balance condition will be regained.
4. Remove the fixings and withdraw the clutch assembly from the flywheel. Withdraw the clutch plate which is released during this procedure.
5. Remove the fixings and withdraw the flywheel.

### To refit

1. Fit the flywheel to the crankshaft and tighten the fixings to 60 lb ft to 65 lb ft (8,5 mkg to 9,0 mkg) torque load. Do not lock the fixings at this stage.
2. Check the run-out on the flywheel face as illustrated. The run-out must not exceed .002 in. (0,05 mm).

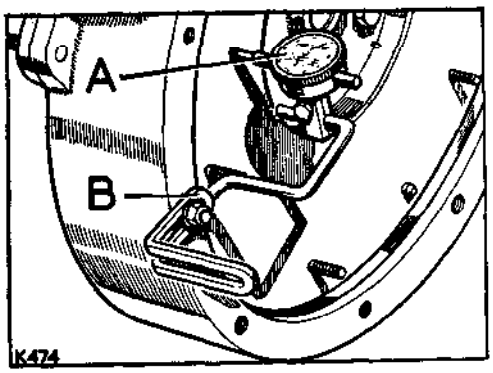


**Fig. A2-120. Checking run-out on flywheel face**

A—Dial test indicator
B—Suitable bracket

3. Lock the flywheel fixings.
4. Offer the clutch driven plate to the primary shaft and ensure that it will slide easily on all the splines.
5. Place the driven plate in position on the flywheel with the longer end of the central boss away from the engine.
6. Centralise the driven plate with the flywheel, using a slave primary shaft or the special centralising tool, Part No. 605022.

*Operations marked with an asterisk (*) can be carried out with the engine installed in the vehicle*

## Operation A2-31—*continued*

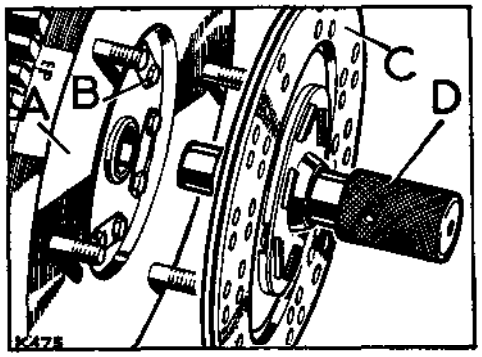


**Fig. A2-121. Centralising clutch driven plate**

A—Flywheel
B—Flywheel fixings
C—Driven plate
D—Centralising tool or slave primary shaft

7. Offer up the clutch assembly to the flywheel, aligning the previously made relationship markings.
8. Fit the fixings and tighten evenly one turn at a time to 22 lb ft to 25 lb ft (3,0 mkg to 3,5 mkg) torque load, using diagonal selection to avoid distortion of the clutch cover.
9. Lock the clutch fixings.
10. Remove the centralising tool or slave shaft.
11. Refit the gearbox—see Section C.
12. Refit the front floor. Operation A2-4.
13. Check and set the clutch pedal adjustment as detailed in Section B.

## *Rear main bearing oil seal and flywheel housing, remove and refit—Operation A2-32

Workshop hand tools:
Spanner sizes: $\frac{7}{16}$ in. AF, $\frac{9}{16}$ in. AF open end
$\frac{5}{16}$ in. BSF, $\frac{7}{16}$ in. BSF open end
$\frac{11}{16}$ in. AF, $\frac{9}{16}$ in. AF, $\frac{7}{16}$ in. AF,
$\frac{1}{2}$ in. AF, $\frac{5}{8}$ in. AF socket
$\frac{1}{2}$ in. AF ring, $\frac{7}{16}$ in. BSF socket
Screwdriver (medium), Pliers (snipe nosed),
1 lb Hammer, Small chisel, Feeler gauges

Special tools:
Engine lifting sling, Part No. 600963
Guides for rear main bearing oil seal, Part No. 270304 (2 off)
Clutch plate alignment gauge, Part No. 605022
Torque wrench

### To remove

1. Remove bonnet panel. Operation A2-1.
2. Remove the front floor. Operation A2-4.
3. Remove gearbox assembly. Section C.
4. Remove the starter motor. Operation A2-9.
5. Remove the crankcase sump. Operation A2-28.
6. Remove the clutch assembly and flywheel Operation A2-31.
7. Fit suitable lifting equipment and support the engine weight.

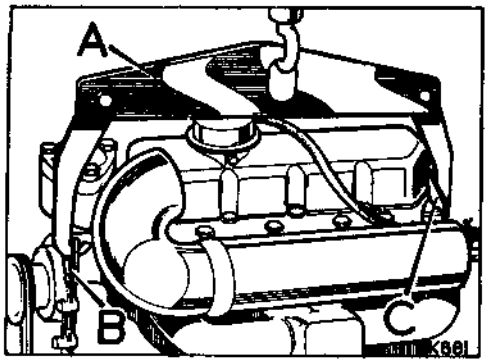


**Fig. A2-122. Lifting sling in position**

A—Engine lifting sling, Part No. 600963, engaged in lifting brackets
B—Front lifting bracket
C—Rear lifting bracket

8. Remove the packing piece from between the flywheel housing and the chassis cross member, previously fitted during gearbox removal.
9. Remove the fixings and withdraw the flywheel housing. Remove the oil seal.

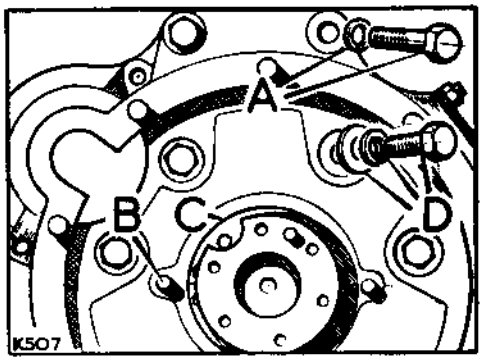


**Fig. A2-123. Flywheel housing fixings**

A—Fixings at flange
B—Locating dowels
C—Oil seal in recess
D—Fixings in counterbores

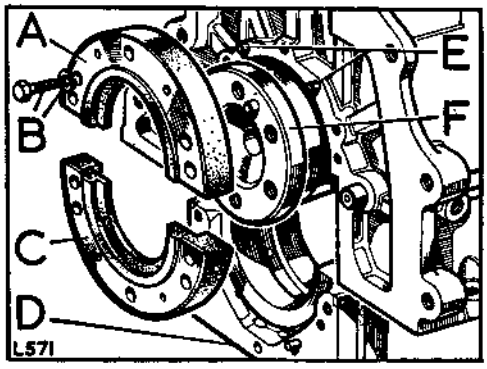


**Fig. A2-124. Seal retainer fixings**

A—Seal retainer upper half
B—Fixings for seal retainer
C—Seal retainer lower half
D—Rear main bearing cap
E—Locating dowels
F—Crankshaft flange, rotate to align cut-out with fixings

*Operations marked with an asterisk (*) can be carried out with the engine installed in the vehicle*

## Operation A2-32—*continued*

10. Remove the rear bearing cap.

11. Remove the fixings and detach the two halves of the rear main bearing retainer from the cylinder block and rear bearing cap respectively. The halves are dowel located.

12. Remove the oil seal from the crankshaft.

### Rear main bearing oil seal, to refit

1. Assemble the garter spring on the oil seal journal of the crankshaft, by laying the spring around the journal, this will bring the two ends, the hook and the eye, adjacent to one another, then insert the hook into the eye. Care must be taken to ensure that during this operation the spring is not stretched at all.

   The spring should be moved along the journal until it is against the thrower flange.

2. Apply Silicone Grease MS4 to the crankshaft oil seal journal and to both sides of the split oil seal sealing lip.

   Open the split seal sufficiently to allow it to be fitted over the crankshaft oil seal journal. Recess in oil seal must be towards thrower flange and garter spring.

   The oil seal must not be repeatedly fitted and removed from the crankshaft, as this can damage the sealing lip.

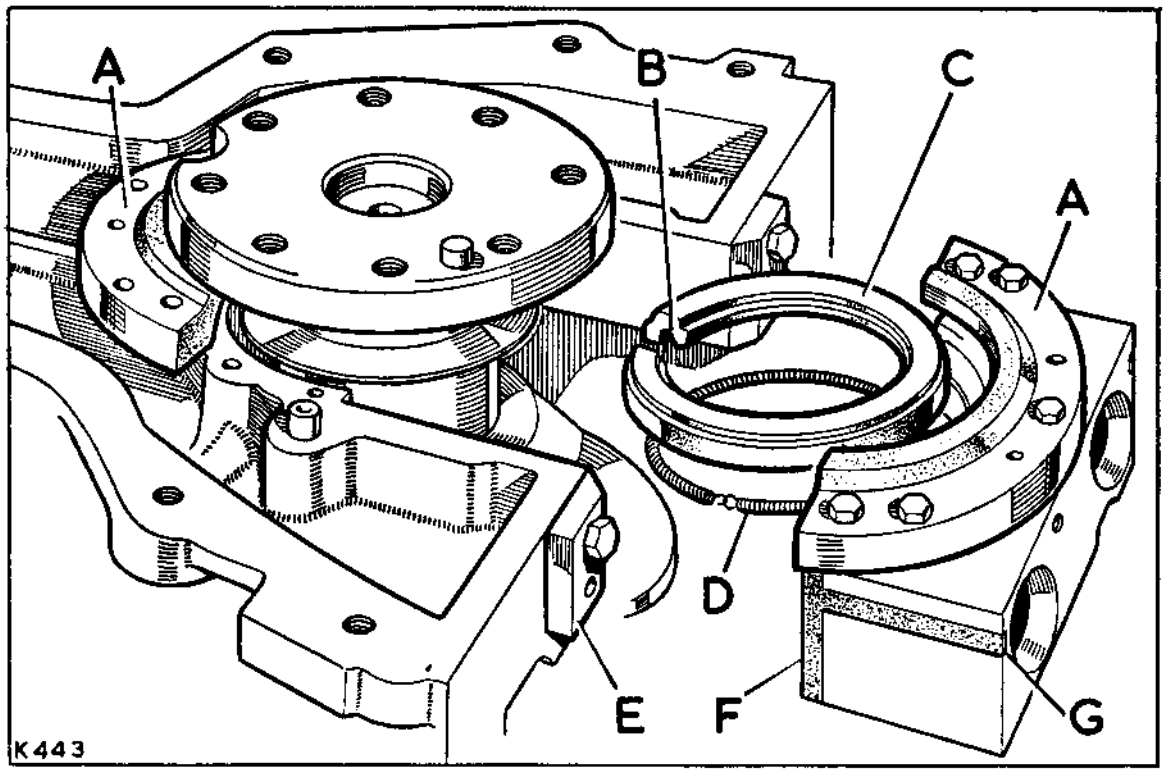


**Fig. A2-125. Oil seal details**

A—Retainer halves
B—Split line of seal to be toward top of engine
C—Split oil seal
D—Garter spring, hook and eye to be midway between split and hinge of oil seal when fitted
E—Guides, Part No. 270304, for rear main bearing cap 'T' seals
F—Trim these edges before fitting to engine to prevent fouling on block
G—Trim these ends when cap is fitted to engine to allow $\frac{1}{32}$ in. (0,8 mm) protrusion

## Operation A2-32—*continued*

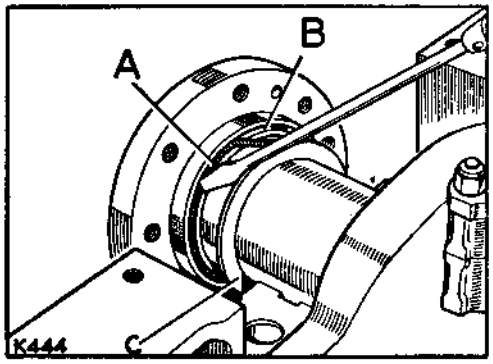


**Fig. A2-126. Fitting garter spring to recess**

A—Garter spring
B—Oil seal recess for garter spring
C—Thrower flange

3. Ensure that the hook and eye of the garter spring are located midway between the split and hinge of the oil seal. Then, using a small screwdriver or similar tool, gently ease the spring into the recess in the oil seal.

4. Rotate the oil seal until the split is on the vertical axis pointing towards the cylinder head and in its approximate running position on the journal; this position is important.
   Apply Hylomar SQ32M sealing compound to the seal diameter of the two half plates, using either an applicator or a brush.

   **Important:** Do not degrease the half seal plates with trichlorethylene, but wipe clean with a dry cloth prior to applying the Hylomar.

5. Fit one half of the oil seal retainer on to the crankcase dowels. The oil seal should be compressed to assist assembly, also ensure that it is correctly located in the retainer recess. Bolt the retainer to the crankcase, leaving the two bolts adjacent to the split line finger-tight, fully tighten the remaining three bolts. In order to fit the bolt it will be necessary to rotate the crankshaft; it is essential to hold the seal so that it does not rotate with the crankshaft.

6. Bolt the other half of the oil seal retainer on to the main bearing cap, in the same way. Appyl Silicone grease MS4 to the 'T' seals and fit them to the main bearing cap. The cap must be off the crankcase for these operations.

   Trim the edges of the 'T' seals as illustrated in Fig. A2-125 to prevent them from fouling the cylinder block when fitted.

7. Fit the main bearing cap with the seal retainer, bearing shell and 'T' seals to the crankcase until there is approximately $\frac{1}{32}$ in. (0,8 mm) clearance between the cap and crankcase. Use the guides, Part No. 270304, as illustrated to feed the 'T' seals past the edges of the crankcase. Remove the guides after fitting the cap.

8. Ensure that the seal is located in the retainer recess.

9. Pull down the cap slowly, ensuring there is no buckling of the split seal or misalignment of the butt joint.

   Tighten the cap bolts to 100 lb ft (13,8 mkg) torque and re-check that the seal is located correctly in the housing.

10. Finally tighten the bolts securing the retainer halves. Turn the bolt heads so that the hexagon corners will not foul the flywheel housing seal when fitting.

### Flywheel housing, to refit

11. Replace the oil seal in the flywheel housing recess and fit the housing to the cylinder block. Fig. A2-123 refers.

12. Refit the crankcase sump. Operation A2-28. When fitting the crankcase sump, trim the ends of the rear main bearing oil seal 'T' seals to allow approximately $\frac{1}{32}$ in. (0,8 mm) protrusion from the rear bearing cap face. Fig. A2-125 refers.

## Operation A2-32—*continued*

13. Refit the gearbox. See Section C.
14. Refit the starter motor. Operation A2-9.
15. Refit the front floor. Operation A2-4.
16. Replenish engine lubricating oil as necessary.
17. Refit the bonnet panel. Operation A2-1.

**ENGINE LUBRICANT CAPACITY**
**Bonneted Control Model, 2¼ Litre Diesel**

| | | Capacity | Imperial Unit | US Unit | Litres |
|---|---|---|---|---|---|
| 88 | Engine .... .... | 11 pints | 11 pints | 13 pints | 6,0 |
| | Filter .... ... | 1½ pints | 1½ pints | 1.8 pints | 0.85 |
| | Engine and Filter ... | 12½ pints | 12½ pints | 14.8 pints | 6,85 |
| 109 | Engine ... ... | 11 pints | 11 pints | 13 pints | 6,0 |
| | Filter .... ... | 1½ pints | 1½ pints | 1.8 pints | 0,85 |
| | Engine and Filter .... | 12½ pints | 12½ pints | 14.8 pints | 6,85 |

## *Pistons and connecting rods, remove and refit—Operation A2-33

*(For overhaul instructions, Operation A2-34 refers)*

Workshop hand tools:
Spanner sizes: $\frac{7}{16}$ in. AF, $\frac{1}{2}$ in. AF, $\frac{5}{8}$ in. AF, $\frac{3}{4}$ in. AF sockets
$\frac{1}{2}$ in. AF, $\frac{7}{16}$ in. AF, $\frac{3}{8}$ in. AF, $\frac{5}{8}$ in. AF, $\frac{9}{16}$ in. AF open end
$\frac{1}{2}$ in. AF ring
$\frac{5}{16}$ in. BSF, $\frac{3}{8}$ in. BSF open end
14 mm plug spanner
Screwdriver (medium), Pliers

Special tools:
Torque wrench

### To remove

1. Remove the bonnet panel. Operation A2-1.
2. Remove the air cleaner. Operation A2-2.
3. Remove the valve gear and rocker shaft. Operation A2-20.
4. Remove the cylinder head. Operation A2-22.
5. Remove the crankcase sump. Operation A2-28.
6. With two pistons at bottom dead centre (BDC) remove the connecting rod cap fixings.
7. Remove the caps and withdraw the connecting rod bearing halves. Retain the caps and bearings in related sets.

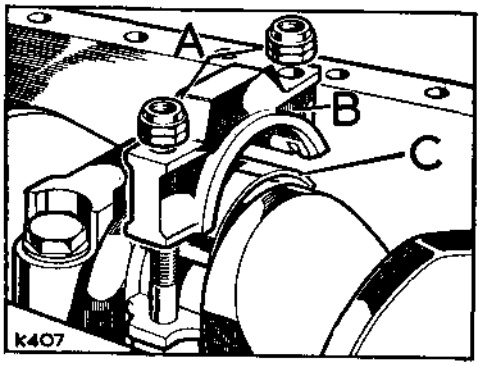


**Fig. A2-127. Connecting rod big-end details**

A—Fixings for connecting rod cap
B—Connecting rod cap
C—Connecting rod bearing lower half

8. Withdraw the pistons and attached connecting rods from the top of the bore.
9. Position the remaining pistons at BDC and repeat the removal procedure.
10. Retain the removed components in related sets.

### To refit

**Note:** If replacement components are to be fitted, the checks detailed in overhaul, Operation A2-34, must be carried out as necessary.

1. Position the crankshaft with two crank pins at BDC and insert the appropriate pistons and attached connecting rods into the cylinder bores from the top of the cylinder block, using a suitable piston ring clamp. Position the oil hole in connecting rod toward camshaft side of engine.
2. Lubricate the journals and bearing halves and fit the appropriate bearing halves to the connecting rods and caps, Fig. A2-127 refers.
3. Fit the connecting rod caps and new fixing nuts. Tighten the fixings to 25 lb ft (3,5 mkg).
4. Repeat the procedure to refit the remaining two assemblies.
5. Refit the crankcase sump. Operation A2-28.
6. Refit the cylinder head. Operation A2-22.
7. Refit the valve gear and rocker shaft. Operation A2-20.
8. Set the tappet clearances, Operation A2-19, and refit the top cover.
9. Refit the air cleaner. Operation A2-2.

*Operations marked with an asterisk (*) can be carried out with the engine installed in the vehicle*

## Operation A2-33—*continued*

10. Refill the engine coolant system.

**COOLANT SYSTEM**
**Bonneted Control Model, 2¼ Litre Diesel**

| | Capacity | Imperial Unit | US Unit | Litres | Antifreeze | Frost Precaution |
|---|---|---|---|---|---|---|
| 88 | 17½ pints | 17½ pints | 21 pints | 10,0 | 33⅓% | —25°F<br>—32°C |
| 109 | 17½ pints | 17½ pints | 21 pints | 10,0 | 33⅓% | —25°F<br>—32°C |

11. Replenish the engine lubrication system.

**ENGINE LUBRICANT CAPACITY**
**Bonneted Control Model, 2¼ Litre Diesel**

| | | Capacity | Imperial Unit | US Unit | Litres |
|---|---|---|---|---|---|
| 88 | Engine .... ....<br>Filter .... ....<br>Engine and Filter .... | 11 pints<br>1¼ pints<br>12½ pints | 11 pints<br>1¼ pints<br>12½ pints | 13 pints<br>1.8 pints<br>14.8 pints | 6,0<br>0,85<br>6,85 |
| 109 | Engine .... ....<br>Filter .... ....<br>Engine and Filter .... | 11 pints<br>1¼ pints<br>12½ pints | 11 pints<br>1¼ pints<br>12½ pints | 13 pints<br>1.8 pints<br>14.8 pints | 6,0<br>0,85<br>6,85 |

12. Refit the bonnet panel. Operation A2-1.

## Pistons and connecting rods, overhaul—Operation A2-34

*(For removal and refitting instructions, Operation A2-33 refers)*

Workshop hand tools:
Spanner sizes: $\frac{9}{16}$ in. AF socket
Circlip pliers, Feeler gauge

Special tools:
Torque wrench
'Plastigage' strip, Part No. 605238
Piston ring clamp

### To dismantle

**Note:** During the following procedures retain all components in related sets to facilitate subsequent assembly.

1. Remove the piston rings using suitable expanding pliers.

2. Remove circlips and withdraw gudgeon pins. Withdraw the pins toward the 'X' mark on the piston crown where so marked. Removal of gudgeon pins is facilitated if the piston is first warmed to 55°C (131°F) approximately.

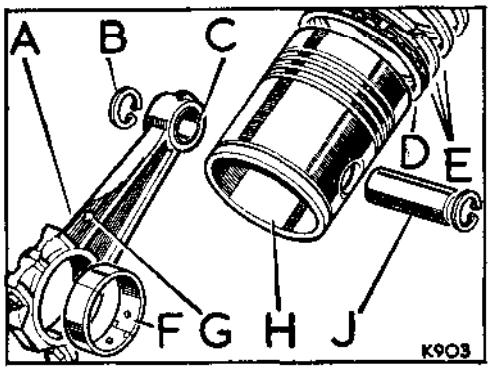


**Fig. A2-128. Exploded view of piston and connecting rod**

A—Connecting rod assembly
B—Retaining circlips for gudgeon pin
C—Connecting rod bush
D—Scraper ring
E—Compression rings
F—Bearing halves
G—Oil spray hole
H—Piston
J—Gudgeon pin

3. Clean all components and inspect for damage and general condition.

### Checking piston clearance in cylinder bore

1. Insert a long .004 in. (0,10 mm) feeler gauge down the RH side of the cylinder bore, insert the correct piston inverted into the cylinder bore. Position the gudgeon pin bore parallel with the centre line of the engine.

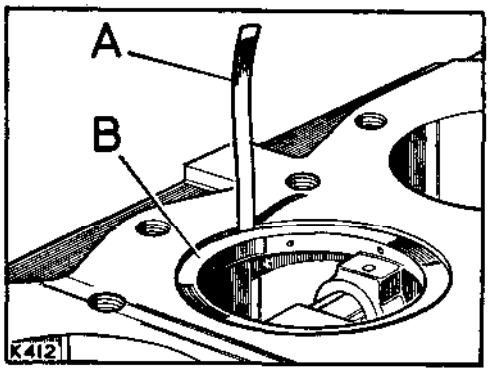


**Fig. A2-129. Checking piston clearance**

A—Feeler gauge
B—Piston in cylinder bore

2. Push the piston down the cylinder until the piston skirt reaches its tightest point in the bore. At this point withdraw the feeler gauge—a steady resistance should be felt. If necessary, select pistons from the range available until this check is satisfactory.

Pistons for the 2¼ litre diesel engine are available in the standard size only in two diameters, that is small diameter identified by the letters 'ZAB' stamped on the piston crown; and large diameter identified by the letters 'BCD'. The difference between the two diameters is .0005 in. (0,012 mm).

The letters 'L' and 'H' which follow the diameter letters represent a difference in height between the gudgeon pin centre and the piston crown. All service replacement pistons will be type 'L' and these must be used where the 'H' type pistons were fitted as original equipment.

The cylinder block has each bore diameter identified by a letter stamped adjacent to the bore on the manifold side of the cylinder block, just above the water gallery casting.

## Operation A2-34—*continued*

The diameter letters represent a difference in bore diameter of .0002 in. (0,005 mm) as shown below:

| Grade letter | Cylinder bore diameter |
|---|---|
| 'Z' .. | Nominal to plus .0002 in. (0,005 mm) above nominal. |
| 'A' .. | .0002 in. to .0004 in. (0,005 to 0,01 mm) above nominal. |
| 'B' .. | .0004 in. to .0006 in. (0,01 mm to 0,015 mm) above nominal. |
| 'C' .. | .0006 in. to .0008 in. (0,015 mm to 0,02 mm) above nominal. |
| 'D' .. | .0008 in. to .0010 in. (0,02 mm to 0,025 mm) above nominal. |

When fitting new pistons to a cylinder block the appropriate piston diameter should be selected:

Use small diameter (ZAB/L) pistons in bores stamped 'Z', 'A' or 'B'.

Use larger diameter (BCD/L) pistons in bores stamped 'B', 'C' or 'D'.

When replacement standard size pistons are fitted to an engine which has been in service, it is of course necessary to check each individual cylinder bore and fit the appropriate size of piston as required.

Any cylinder block carrying the grade letters 'ZZ' indicate that in this particular case the bore diameter is between the nominal size and minus .0002 in. (0,005 mm). However as blocks marked in this manner are the exception rather than the rule, 'ZZ' grade pistons are not available, and in the case of a small mileage engine with negligible bore wear requiring a new piston a grade 'ZAB' would be suitable, subject to the normal checks being carried out.

Pistons are also supplied by the Parts Department the following oversize dimensions:

(a) Oversize .010 in. (0,254 mm).

(b) Oversize .020 in. (0,508 mm).

(c) Oversize .030 in. (0,762 mm).

(d) Oversize .040 in. (1,016 mm).

Small and large diameter gradings do not apply to oversize pistons.

### Checking piston ring gap in bore

1. Check the piston ring gaps in the cylinder bores using a slave piston as illustrated to keep the rings square in the bore.

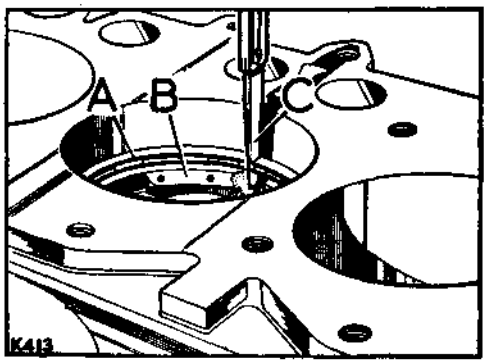


**Fig. A2-130. Checking piston ring gap**

A—Piston ring
B—Slave piston used to keep rings square
C—Feeler gauge

The piston ring gaps must be as follows when fitted:

(a) Upper compression ring (chromed): .014 in. to .019 in. (0,35 mm to 0,50 mm).

(b) Middle and lower compression rings: .010 in. to .015 in. (0,25 mm to 0,38 mm).

(c) Scraper ring (early type one-piece): .010 in. to .015 in. (0,25 mm to 0,38 mm).

(d) Scraper ring (later type three-piece), upper and lower rail: .015 in. to .045 in. (0,38 mm to 1,14 mm).

## Operation A2-34—*continued*

### Checking ring clearance in piston groove

1. Fit the piston rings to the piston and check the clearances in the respective grooves as illustrated.

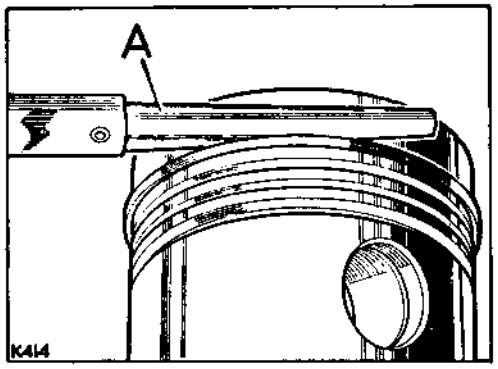


**Fig. A2-131. Checking ring clearance in groove**

A—Clearance between rings and grooves to be .0025 in. to .0045 in. (0,06 mm to 0,11 mm)

**Note:** With the latest type scraper ring, clearance between the rings and grooves to be .0015 in. to .0025 in. (0,038 mm to 0,064 mm).

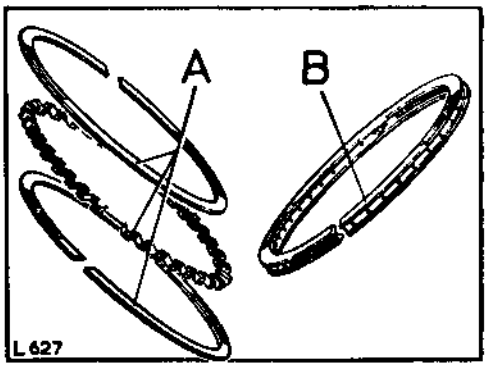


**Fig. A2-132. Early and late type scraper rings**

A—Later type ring, three-piece. Fitted to upper groove (above gudgeon pin) only

B—Early type ring, one-piece. Can be fitted to upper and lower scraper ring grooves

The top compression ring is chromium-plated and may be fitted either way, whereas the second and third compression rings are bevel-edged and must be fitted with the side marked 'T' or 'Top' uppermost.

The oil scraper ring fitted on earlier engines as original equipment may also be fitted either way. The second scraper ring groove below the gudgeon pin is left empty on production. This groove can be used to carry another scraper ring if necessary.

The later type three-piece scraper ring, which may be fitted to replace earlier one-piece scraper rings, is fitted as follows:

(a) The three-piece oil control ring must be fitted to the upper scraper ring groove only. No machining is necessary to the groove. The lower groove below the gudgeon pin must not be used.

(b) The two chrome-plated rails of the ring assembly should be checked for ring gap in the normal way. The gap is .015 in. to .045 in. (0,38 mm to 1,14 mm).

(c) Wind a rail on to the piston skirt, just below the upper scraper ring groove.

(d) Place the expander in the groove with its ends butted, in line with the gudgeon pin bore. Great care must be taken to ensure the ends of the expander do not overlap, and to facilitate this, the ends have been coloured white and green so that they can easily be seen. **Both coloured ends must be visible.**

(e) Fit the lower rail into the groove, beside the expander. The ring gap should be situated approximately 1.0 in. (25,4 mm) to the left of the coloured butted ends of the expander.

(f) Do not, at this stage, push the back of the expander into the groove. Wind the other rail down over the bands into the scraper groove on the upper side of the expander with the gap of the rail situated approximately 1.0 in. (25,4 mm) to the right of the coloured butted ends of the expander.

## Operation A2-34—*continued*

(g) Work the back of the expander down into the groove between the rails previously fitted. Centralise the ring on the piston, but do not move the assembly more than is necessary. The ring will now be complete in the groove, and although it may feel somewhat stiff to move in the groove, this can be ignored.

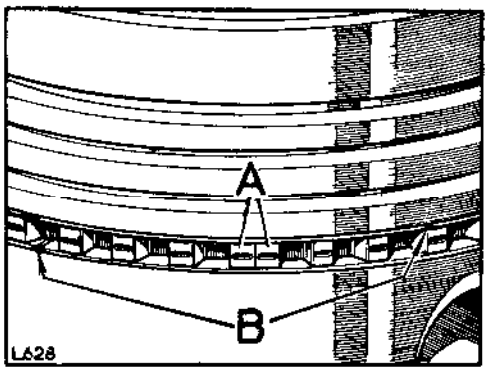


**Fig. A2-133. Later type oil scraper ring fitted**

A—Coloured ends butting, not overlapped
B—Gaps in upper and lower rails

### Gudgeon pin checks

1. Measure the gudgeon pin fit in the connecting rod bush. The required fitted clearance is .001 in. (0,025 mm) maximum giving an easy sliding fit when cold and dry. A replacement bush must be reamed when fitted to obtain this clearance. Ensure that the pre-drilled oil hole in the bush is aligned with the connecting rod oil hole when pressing in a replacement bush.
2. Check the gudgeon pin diameter relative to the piston bores. The required interference fit is zero to .0002 in. (0,005 mm) which will give an easy hand fit with the piston warmed to 49° to 60°C.
3. Fit each connecting rod to a suitable test fixture and check for twist and mal-alignment.

### Connecting rod bearing cap checks

1. Select the correct cap for each connecting rod as denoted by the number stamped near the joint faces. This number also indicates the crankshaft journal to which it must be fitted.
2. Assemble the caps, less bearing halves, to the respective connecting rods.
3. Tighten the fixings to 25 lb ft (4,9 mkg).
4. Slacken off one fixing and check that there is no clearance at the joint face. If there is clearance then the assemblies must be replaced.
5. Repeat the check on the other side of the assembly.

### Connecting rod bearing nip

1. Fit the bearing halves. Torque tighten the fixings then slacken one fixing as before and check the clearance between the joint faces. The clearance must be .002 in. to .004 in. (0,0 mm to 0,10 mm).

   The bearing nip can be corrected by selective assembly of the bearing shells; these are available in slightly varying thicknesses. Do not file or machine the caps or connecting rods to vary the bearing nip.

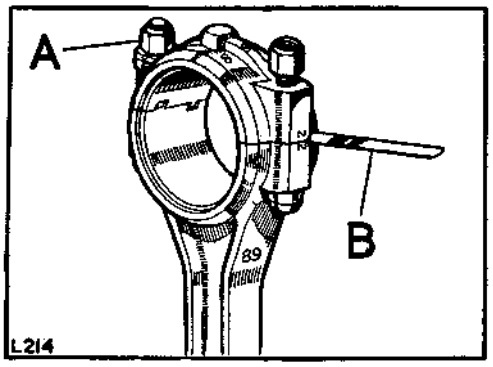


**Fig. A2-134. Checking connecting rod bearing nip**

A—Fixing, torque loaded
B—Feeler gauge

2. Assemble each connecting rod assembly to its respective crankshaft journal and repeat the connecting rod bearing nip check. Again the clearance between the connecting rod and cap must be .002 in. to .004 in. (0,05 mm to 0,10 mm).

   Alternatively, use 'Plastigage' strip inserted between the connecting rod bearings and the crankshaft journals. This method will indicate the actual clearance between the bearings and the journals and must be .001 in. to .0025 in. (0,025 mm to 0,063 mm) with the fixings torque loaded as in the alternative method.

## Operation A2-34—*continued*

'Plastigage' is available under Rover Part No. 605238. Remove all traces of 'Plastigage' from the components after use.

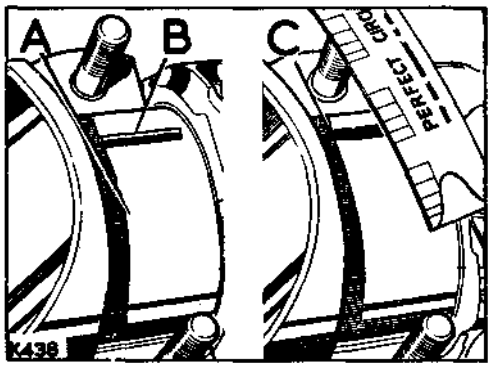


**Fig. A2-135. Checking connecting rod and bearing clearance, using 'Plastigage'**

A—Journal for connecting rod
B—Initial position of 'Plastigage'
C—Flattened 'Plastigage', do not remove until width has been measured against scale on packet

3. Make final check to prove the bearing clearance, using a .0025 in. (0,063 mm) shim paper. The connecting rod should resist rotation when the shim paper is fitted between the journal and one half of the bearing shell and move freely by hand with the shim paper removed.

### Connecting rod end-float check

1. Check the connecting rod end-float using a feeler gauge inserted between the end face of the rod and the journal shoulder.

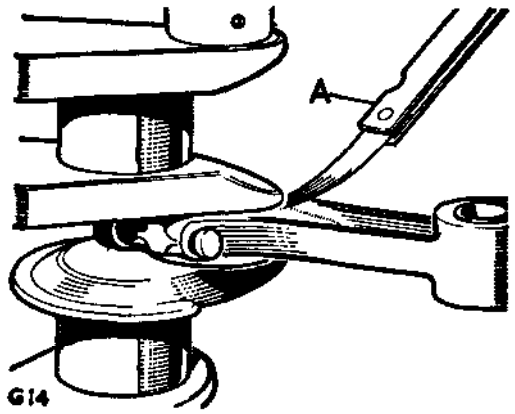


**Fig. A2-136. End-float check**

A—Feeler gauge B—Connecting rod
C—Journal shoulder

The end-float should be .007 in. to .011 in. (0,20 mm to 0,30 mm).

2. Remove the connecting rods from the crankshaft and retain all parts as related sets.

### To assemble

1. Assemble the pistons to the respective connecting rods. Position the point of the 'V'-shaped recess in the piston crown toward the oil spray hole side of the connecting rod.
2. With the pistons warmed to approximately 55°C (132°F), fit the gudgeon pins and retaining circlips. Where the piston crowns are marked with an 'X', enter the gudgeon pin from the 'X' side.
3. Position the previously fitted piston rings so that the ring gaps are adjacent to the gudgeon pin bore on alternate sides of the piston and do not coincide.

## Crankshaft and main bearings, remove and refit—Operation A2-35

Workshop hand tools:
Spanner sizes: $\frac{9}{16}$ in. AF, $\frac{7}{16}$ in. AF, $\frac{13}{16}$ in. AF open end
$\frac{7}{16}$ in. AF, $\frac{1}{2}$ in. AF, $\frac{9}{16}$ in. AF, $\frac{5}{8}$ in. AF, $\frac{13}{16}$ in. AF socket
$\frac{5}{16}$ in. BSF, $\frac{7}{16}$ in. BSF open end
$\frac{7}{16}$ in. BSF socket
$\frac{1}{2}$ in. AF, $\frac{9}{16}$ in. AF ring
1 lb Hammer, Small chisel, Feeler gauges

Special tools:
Engine lifting sling, Part No. 600963
Guides for rear main bearing oil seal, Part No. 270304 (2 off)
Clutch plate alignment gauge, Part No. 605022
Torque wrench

### To remove

1. Remove the bonnet panel. Operation A2-1.
2. Remove the air cleaner. Operation A2-2.
3. Remove the radiator and grille panel. Operation A2-3.
4. Remove the front floor. Operation A2-4.
5. Remove the engine from the vehicle. Operation A2-5.
6. Remove the engine front cover. Operation A2-25.
7. Remove the timing chain and tensioner. Operation A2-26.
8. Remove the crankcase sump. Operation A2-28.
9. Fit the engine to a suitable stand.
10. Remove the oil pump. Operation A2-29.
11. Remove the clutch and flywheel. Operation A2-31.
12. Remove the flywheel housing. Operation A2-32.
13. Remove the connecting rod caps and bearing lower halves and retain as related sets.

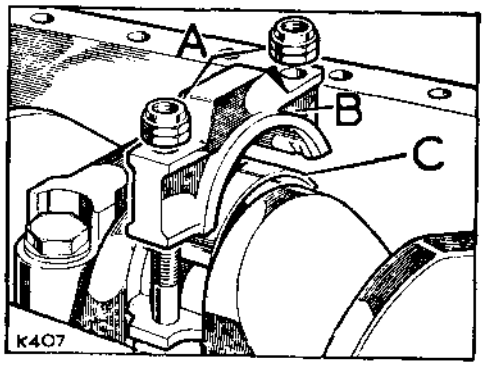


**Fig. A2-137. Connecting rod big-end details**

A—Fixings for connecting rod caps
B—Connecting rod caps
C—Connecting rod bearing lower half

14. Remove the main bearing caps and lift the crankshaft clear. Retain the bearing halves and caps in related sets.

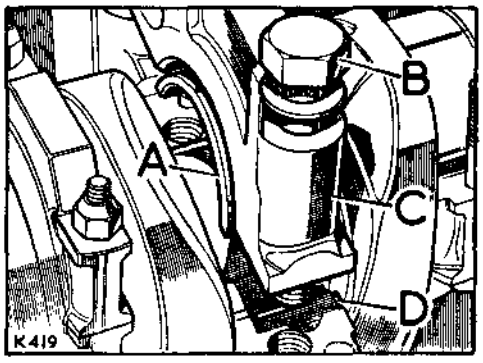


**Fig. A2-138. Crankshaft main bearing caps**

A—Bearing lower half
B—Fixings, bearing cap to cylinder block
C—Bearing cap
D—Thrust washer positioned each side of centre bearing upper half

15. Remove the oil seal from the crankshaft.
16. Remove the seal retainer halves, Fig. A2-139 refers.

### To refit

1. Where replacement components are to be fitted, the relevant checks detailed in Operation A2-36 must be carried out.
2. Position the crankshaft bearing upper halves to the engine, locating the bearing tongues into the recesses provided.
3. Assemble the crankshaft to the engine and insert the thrust washers at each side of the centre bearing shell with unplated faces toward cylinder block. The thrust washer thicknesses must agree within .003 in. (0,07 mm).
4. Position the bearing lower halves on to the front and centre bearing caps and fit the caps. Do not fully tighten the fixings at this stage.

## Operation A2-35—*continued*

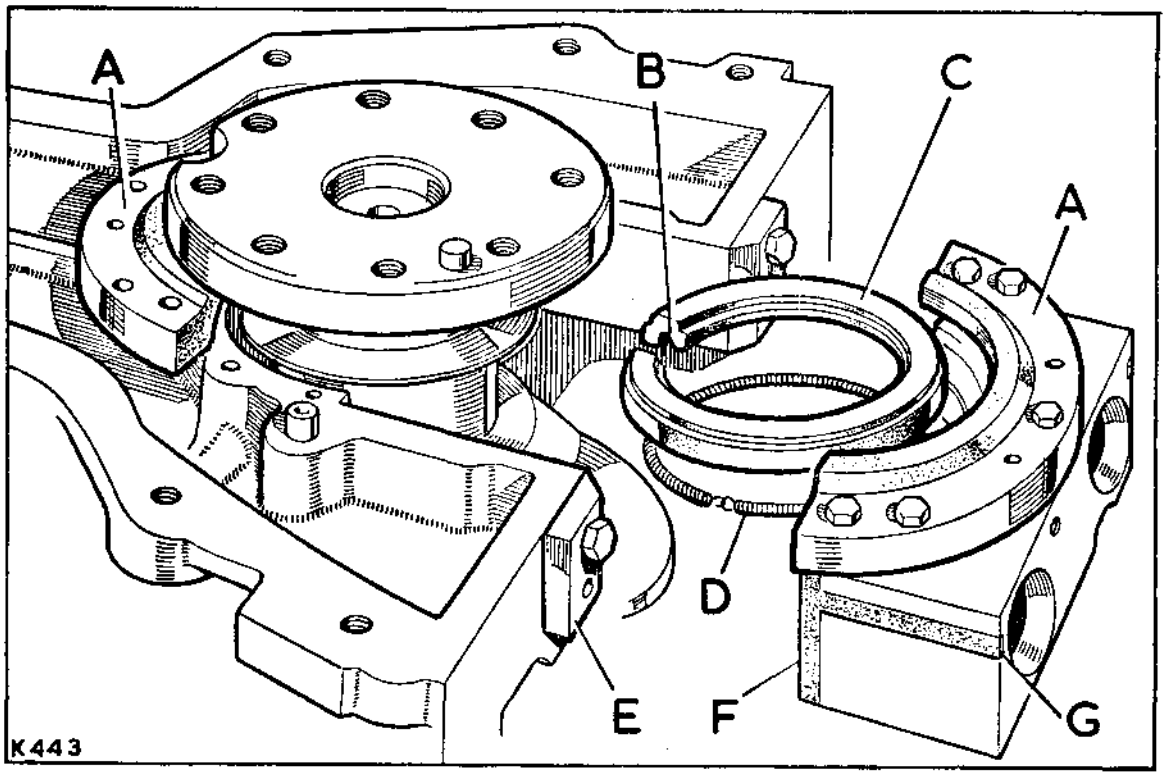


**Fig. A2-139. Oil seal details**

A—Retainer halves
B—Split line of seal to be toward top of engine when fitted
C—Split oil seal
D—Garter spring, hook and eye to be midway between split and hinge of oil seal when fitted
E—Guides, Part No. 270304, for rear main bearing cap 'T' seals
F—Trim these edges before fitting to engine to prevent seals from folding
G—Trim these ends to allow $\frac{1}{32}$ in. (0,8 mm) protrusion when cap is fitted to engine

5. With the crankshaft in the engine, assemble the garter spring on the oil seal journal of the crankshaft, by laying the spring around the journal, this will bring the two ends, the hook and the eye, adjacent to one another, then insert the hook into the eye. Care must be taken to ensure that during this operation the spring is not stretched at all.

   The spring should be moved along the journal until it is against the thrower flange.

6. Apply Silicone Grease MS4 to the crankshaft oil seal journal and to both sides of the split oil seal sealing lip.

   Open the split seal sufficiently to allow it to be fitted over the crankshaft oil seal journal. Recess in oil seal must be towards thrower flange and garter spring.

   The oil seal must not be repeatedly fitted and removed from the crankshaft, as this can damage the sealing lip.

## Operation A2-35—*continued*

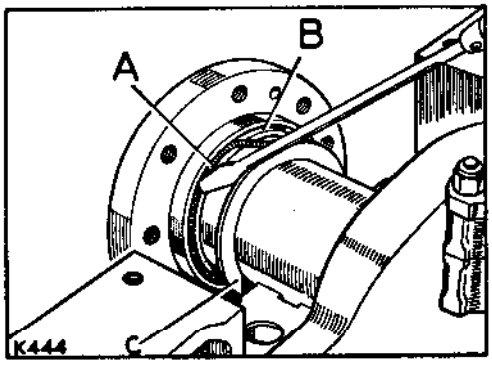


**Fig. A2-140. Fitting garter spring**

A—Garter spring
B—Oil seal recess for garter spring
C—Thrower flange

7. Rotate the oil seal until the split is on the vertical axis pointing towards the cylinder head and in its approximate running position on the journal; this position is important.

   Apply Hylomar SQ32M sealing compound to the seal diameter of the two half plates, using either an applicator or a brush.

   **Important:** Do not degrease the half seal plates with trichlorethylene, but wipe clean with a dry cloth prior to applying the Hylomar.

8. Fit one half of the oil seal retainer on to the crankcase dowels. The oil seal should be compressed to assist assembly, also ensure that it is correctly located in the retainer recess. Bolt the retainer to the crankcase, leaving the two bolts adjacent to the split line finger-tight, fully tighten the remaining three bolts. In order to fit the bolt it will be necessary to rotate the crankshaft; it is essential to hold the seal so that it does not rotate with the crankshaft.

9. Bolt the other half of the oil seal retainer on to the main bearing cap, in the same way. Apply Silicone grease MS4 to the 'T' seals and fit them to the main bearing cap. The cap must be off the crankcase for these operations.

   Trim the edges of the 'T' seals as shown to prevent them fouling the cylinder block when fitted.

10. Fit the main bearing cap with the seal retainer, bearing shell and 'T' seals to the crankcase, see Fig. A2-139, until there is a $\frac{1}{32}$ in. (0,8 mm) gap between the cap and crankcase.

11. Ensure that the seal is located in the retainer recess.

12. Pull down the cap slowly, ensuring there is no buckling of the split seal or misalignment of the butt joint.

13. Tighten all the bearing cap fixings to a torque loading of 100 lb ft (13,8 mkg).

14. Refit the flywheel housing. Operation A2-32.

15. Refit the clutch and flywheel. Operation A2-31.

16. Refit the oil pump. Operation A2-29.

17. Remove the engine from the stand and refit the sump. Operation A2-28.

18. Refit the engine to the vehicle. Operation A2-5.

19. Carry out the valve timing procedure. Operation A2-27.

20. Refit the timing chain and tensioner. Operation A2-26.

21. Refit the engine front cover. Operation A2-25.

22. Refit the front floor. Operation A2-4.

23. Refit the radiator and grille panel. Operation A2-3.

24. Refit the air cleaner. Operation A2-2.

## Operation A2-35—*continued*

25. Refill engine coolant system.

**COOLANT SYSTEM**

**Bonneted Control Model, 2½ Litre Diesel**

| | Capacity | Imperial Unit | US Unit | Litres | Antifreeze | Frost Precaution |
|---|---|---|---|---|---|---|
| 88 | 17½ pints | 17½ pints | 21 pints | 10,0 | 33⅓% | —25°F<br>—32°C |
| 109 | 17½ pints | 17½ pints | 21 pints | 10,0 | 33⅓% | —25°F<br>—32°C |

26. Replenish the engine lubricating oil.

**ENGINE LUBRICANT CAPACITY**

**Bonneted Control Model, 2½ Litre Diesel**

| | | Capacity | Imperial Unit | US Unit | Litres |
|---|---|---|---|---|---|
| 88 | Engine .... .... | 11 pints | 11 pints | 13 pints | 6,0 |
| | Filter .... .... | 1½ pints | 1½ pints | 1.8 pints | 0,85 |
| | Engine and Filter .... | 12½ pints | 12½ pints | 14.8 pints | 6,85 |
| 109 | Engine .... .... | 11 pints | 11 pints | 13 pints | 6,0 |
| | Filter .... .... | 1½ pints | 1½ pints | 1.8 pints | 0,85 |
| | Engine and Filter .... | 12½ pints | 12½ pints | 14.8 pints | 6,85 |

27. Refit the bonnet panel. Operation A2-1.

## Crankshaft and main bearings, to check—Operation A2-36

*(For removing and refitting details, Operation A2-35 refers)*

Workshop hand tools:
Spanner sizes: $\frac{7}{16}$ in. AF open end
$\frac{1}{2}$ in. AF socket
Screwdriver (medium), Screwdriver (small),
Feeler gauges

Special tools:
Torque wrench
Dial test indicator
'Plastigage' strip for use on checking bearing clearance, Part No. 605238

### To overhaul

1. Inspect all components for damage and general condition.
2. Check for crankshaft journal ovality, or excessive scoring. Crankshafts may be reground in .010 in. (0,25 mm) stages to .040 in. (1,0 mm) undersize.

   Bearing sets in .010 in. (0,25 mm) stages are supplied by the Parts Department. These sets include crankshaft thrust washers and connecting rod bearings.
3. Extreme care must be taken when regrinding 2¼ litre Diesel crankshaft journals, to ensure that a .150 in. (3,8 mm) radius is maintained on the journal sides as shown in the illustration.

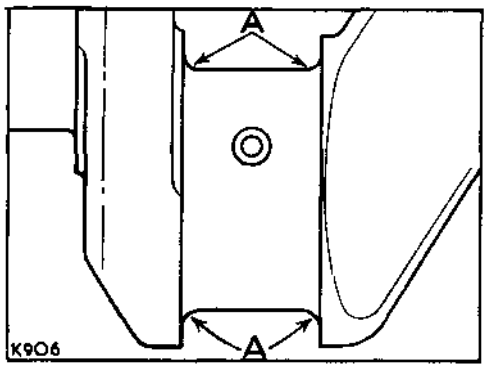


**Fig. A2-141. Crankshaft journal radius**

A—Maintain a radius of .150 in. (3,8 mm)

4. The crankshaft journals should be closely inspected for wear and damage and the crankpins checked for ovality.
5. Check for general condition of main bearing cap location dowels, dowel spigots and surrounding areas.
6. With the crankshaft removed, check the main bearings fit in the housings as follows:
   (a) Fit the front bearing cap, less the shell bearings, to the correct location.
   (b) Fit and tighten the cap fixings to a torque loading of 100 lb ft (13,8 mkg).
   (c) Slacken one fixing and check that there is no clearance between the cap and cylinder block faces. Clearance here indicates that the cap has been filed or damaged and it will be necessary to replace the complete cylinder block.
7. Check for clearance on the other side of the cap and block assembly, repeating the foregoing procedure.

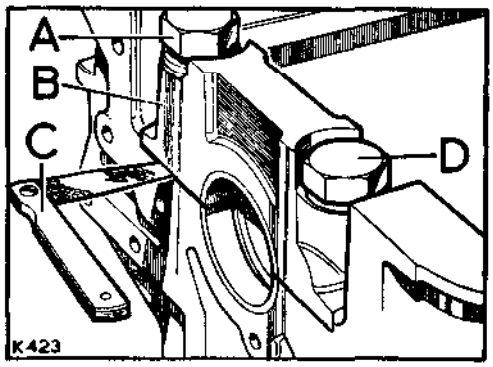


**Fig. A2-142. Checking main bearing nip**

A—Slackened fixing
B—Main bearing cap
C—Feeler gauge
D—Tightened fixing

8. When satisfactory, fit the main bearings and repeat the foregoing procedure. The clearance at the face should now be .004 in. to .006 in. (0,10 mm to 0,15 mm) and may be achieved by selective assembly of the bearing shells.
9. Repeat the procedure and check the remaining bearings and caps.
10. The running clearance between the bearings and the crankshaft journals should be .001 in. to .0020 in. (0,02 mm to 0,05 mm). An alternative method of checking the clearance is by using 'Plastigage' strip, available under Rover Part No. 605238, as illustrated.
11. When the bearing nip has been checked, remove the caps and bearing shell bottom halves. Position a standard size thrust bearing at each side of

## Operation A2-36—*continued*

centre bearing shell—top halves—and fit the crankshaft. Fit the thrust washers with the unplated faces toward the cylinder block. Lubricate the crankshaft journals, using clean engine oil.

The thrust washer thicknesses must agree within .003 in. (0,07 mm).

12. Mount a dial test indicator, then check and note the crankshaft end-float reading which should be .002 in. to .006 in. (0,05 mm to 0,15 mm).

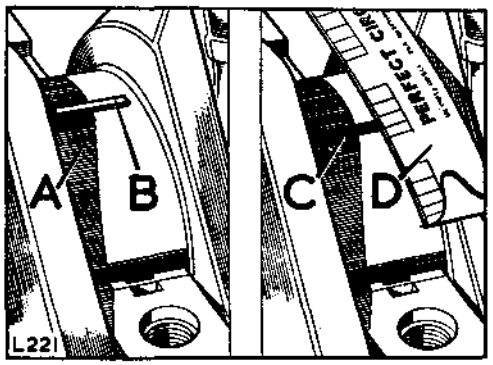


**Fig. A2-143. Use of 'Plastigage' strip to measure bearing clearance**

A—Main bearing journal
B—Initial position of 'Plastigage'
C—Flattened 'Plastigage', do not remove until measured against scale
D—Graduated scale on 'Plastigage' packet

If the crankshaft end-float reading obtained is not within the limits, fit suitable thrust washers from the range available. The variation of thrust washer thickness at each side must not exceed .003 in. (0,08 mm) to ensure that the crankshaft remains centralised.

13. When satisfactory, check the crankshaft for freedom of rotation. Fitting a .0025 in. (0,06 mm) feeler paper between a main bearing and the journal should cause resistance to rotation; the crankshaft should be free to rotate by hand with the feeler paper removed.

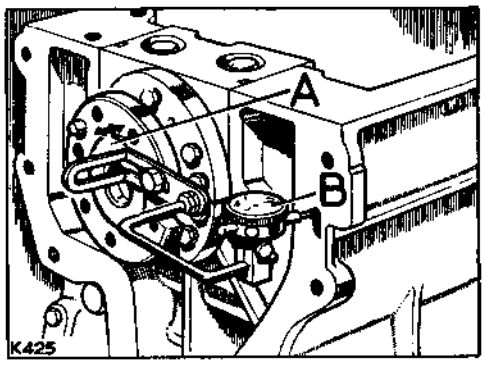


**Fig. A2-144. Checking crankshaft end-float**

A—Lever crankshaft fully forward, then fully to rear, to check total end-float
B—Dial test indicator

## *Camshaft, remove and refit—Operation A2-37

*(For camshaft bearing overhaul Information, Operation A2-38 refers)*

Workshop hand tools:
Spanner sizes: ½ in. x 7/16 in. AF (2 off), ⅜ in. AF open end
½ in. AF, ⅜ in. AF, ¾ in. AF socket
½ in. AF ring
5/16 in. BSF, ⅜ in. BSF open end
Screwdriver (medium), Screwdriver (small),
Pliers (long nosed), Feeler gauges

Special tools:
Extractor for camshaft chainwheel, Part No. 507231
Extractor, Part No. 530101
Torque wrench

**To remove**

1. Remove bonnet panel. Operation A2-1.
2. Remove the air cleaner. Operation A2-2.
3. Remove the radiator and grille panel. Operation A2-3.
4. Remove the external oil filter. Operation A2-16.
5. Remove the fuel distributor pump. Operation A2-17.
6. Remove the distributor pump drive gears. Operation A2-18.
7. Remove the valve gear and rocker shaft. Operation A2-20.
8. Remove the cylinder head. Operation A2-22.
9. Remove the engine front cover. Operation A2-25.
10. Remove the timing chain tensioner. Operation A2-26.
11. Remove tappet locating bolts at RH side of engine block. Do not remove tappet guide at this stage.

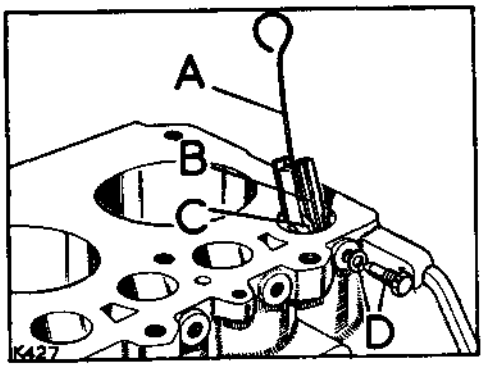


**Fig. A2-145. Removing tappets and rollers**
A—Spring clip
B—Tappet slide
C—Tappet roller
D—Tappet guide locating bolts

12. Remove the tappet slides and withdraw the tappet rollers, using a locally made spring clip. On early type only the tappet rollers are withdrawn complete with the tappet slides.
13. Remove the tappet guides. The use of special tool, Part No. 530101 as illustrated, will facilitate this procedure if the guides are difficult to remove by hand.

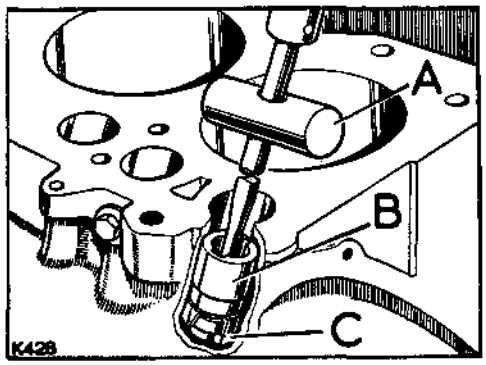


**Fig. A2-146. Removing tappet guides**
A—Special tool, Part No. 530101
B—Tappet guide
C—Extractor adaptor, part of special tool, Part No. 530101

14. Withdraw the distributor drive shaft then remove the locating grub screw and withdraw the vertical drive shaft gear.
15. Withdraw the timing chain and remove the camshaft chainwheel.
16. Remove the thrust plate and withdraw the camshaft, using special tool, Part No. 530101 or a slave bolt.
17. Camshaft bearing removing, refitting and overhaul details are included in 'Cylinder block overhaul, Operation A2-38' as a reaming procedure is required with the engine removed.

*Operations marked with an asterisk (*) can be carried out with the engine installed in the vehicle*

## Operation A2-37—*continued*

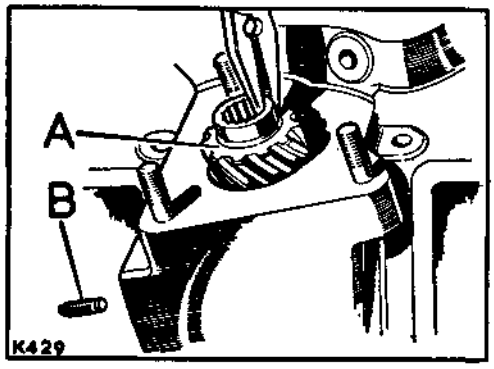


**Fig. A2-147. Removing the vertical drive shaft gear**

A—Vertical drive shaft gear
B—Locating grub screw in external oil filter joint face

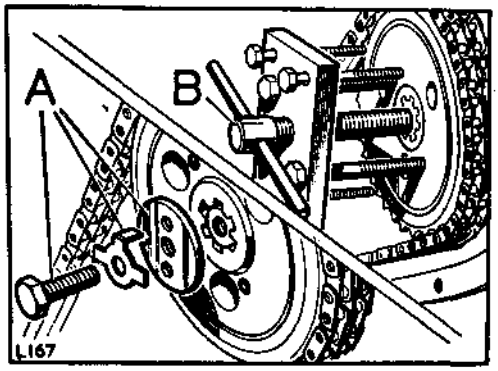


**Fig. A2-148. Camshaft chainwheel**

A—Fixings, chainwheel to camshaft
B—Use of special extractor, Part No. 507231, facilitates chainwheel removal

### To refit

1. Insert the camshaft, keyed end to front of engine, and fit the thrust plate. Do not lock the fixings at this stage.

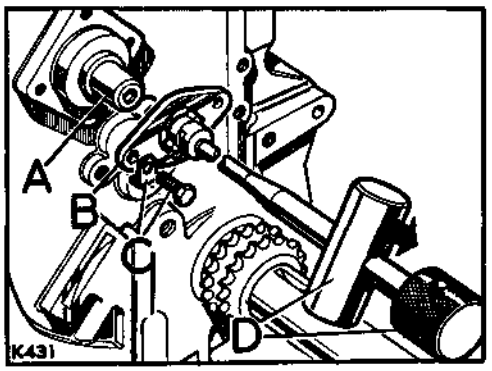


**Fig. A2-149. Removing the camshaft**

A—Camshaft
B—Thrust plate
C—Fixings, thrust plate to cylinder block
D—Special tool, Part No. 530101, in position

2. Fit the chainwheel to the camshaft and check the camshaft end-float which must be .0025 in. to .0055 in. (0,06 mm to 0,13 mm).

   The end-float is adjusted by thrust plate selection.

3. When satisfactory, remove the chainwheel, lock the thrust plate fixings, Fig. A2-149 refers, and refit the chainwheel.

4. Refit the tappet assemblies, referring to Fig. A2-145 and Fig. A2-146.

5. Refit the cylinder head. Operation A2-22.

6. Refit the valve gear and rocker shaft. Operation A2-20.

7. Carry out the valve timing procedure. Operation A2-27.

8. Refit the timing chain tensioner. Operation A2-26.

## Operation A2-37—*continued*

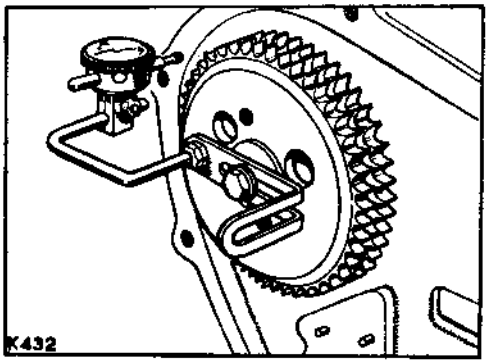


**Fig. A2-150. Camshaft end-float check**

9. Refit the engine front cover. Operation A2-25.
10. Refit the fuel distributor pump drive gears. Operation A2-18.
11. Refit the fuel distributor pump and carry out the distributor timing procedure. Operation A2-17.
12. Refit the external oil filter. Operation A2-16.
13. Refit the radiator and grille panel. Operation A2-3.
14. Refit the air cleaner. Operation A2-2.
15. Replenish the engine lubricating oil.

**ENGINE LUBRICANT CAPACITY**
**Bonneted Control Model, 2¼ Litre Diesel**

| | | Capacity | Imperial Unit | US Unit | Litres |
|---|---|---|---|---|---|
| 88 | Engine .... .... | 11 pints | 11 pints | 13 pints | 6,0 |
| | Filter .... .... | 1½ pints | 1½ pints | 1.8 pints | 0,85 |
| | Engine and Filter .... | 12½ pints | 12½ pints | 14.8 pints | 6,85 |
| 109 | Engine .... .... | 11 pints | 11 pints | 13 pints | 6,0 |
| | Filter .... .... | 1½ pints | 1½ pints | 1.8 pints | 0,85 |
| | Engine and Filter .... | 12½ pints | 12½ pints | 14.8 pints | 6,85 |

16. Refill the engine coolant system.

**COOLANT SYSTEM**
**Bonneted Control Model, 2¼ Litre Diesel**

| | Capacity | Imperial Unit | US Unit | Litres | Antifreeze | Frost Precaution |
|---|---|---|---|---|---|---|
| 88 | 17½ pints | 17½ pints | 21 pints | 10,0 | 33⅓% | —25°F<br>—32°C |
| 109 | 17½ pints | 17½ pints | 21 pints | 10,0 | 33⅓% | —25°F<br>—32°C |

17. Refit the bonnet panel. Operation A2-1.

## Cylinder block and camshaft bearings, overhaul—Operation A2-38

Workshop hand tools:
Spanner sizes: ½ in. x 7/16 in. AF (2 off), ⅜ in. AF, 7/16 in. AF, 9/16 in. AF, 11/16 in. AF open end
7/16 in. AF, ½ in. AF, 9/16 in. AF, ⅝ in. AF, ¾ in. AF, 11/16 in. AF socket
5/16 in. BSF, 7/16 in. BSF, ⅜ in. BSF open end
7/16 in. BSF socket
Screwdriver (medium), Screwdriver (small), Pliers (long nosed), Feeler gauges, 1 lb Hammer Chisel (small)

Special tools:
**Camshaft bearing overhaul tools:**
Guide plug, Part No. 274394
Reamer for bearings, Part No. 274389
**Method 'A'** (see text)
Bearing drift, Part No. 274388
Guide tube for front bearings, Part No. 274385
Bearing fitting bar, Part No. 274382
Spacer, Part No. 274383
Spigot, Part No. 274384
Guide tool for rear bearings, Part No. 274386
Adaptor, Part No. 531760
**Method 'B'** (see text)
Bearing drift, Part No. 274388
Adaptor, Part No. 531760
or
Bearing drift and adaptor complete, Part No. 605975

### To remove

Carry out the engine removal and dismantling work previously detailed as necessary until only the camshaft bearings remain in the cylinder block.

### Camshaft bearings, to replace

**Note:** When new camshaft bearings are to be fitted, the front and front intermediate bearings must be removed and new ones fitted **before** removing the rear bearings.

Two methods of replacing the bearings are detailed. Use Method 'A' if the full range of special tools is held; Method 'B' uses a simplified tooling procedure.

### Method 'A', to replace bearings

1. Unscrew the 3½ in. (88 mm) long stud from the joint face at front of cylinder block and remove the bearing cover at rear of cylinder block.

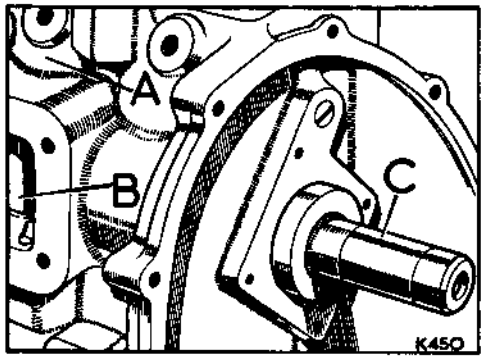


**Fig. A2-151. Driving out the front bearings**
A—Cylinder block
B—Front tappet chamber
C—Special tool, Part No. 274388

2. Drive out the front and front intermediate bearings, using the special tool, Part No. 274388.
3. Withdraw the front bearing from the vacant front side cover aperture. Collapse the front intermediate bearing and withdraw from the distributor drive chamber.
4. Fit new front and front intermediate bearings, **before** removing the rear bearings with drift.
5. Fit a guide tool, Part No. 274385, into the two **old** rearmost bearings with the part of flange marked 'TOP' uppermost, then insert end cover set bolts loosely for location purposes. Position a new front bearing on to the handle end of bearing fitting bar, Part No. 274382, and locate by means of the peg and semi-circular cut-out, then slide a spacer, Part No. 274383, on to the fitting bar and engage the locating shoulder.

**Note:** The front bearing is wider and has an extra oil passage drilling.

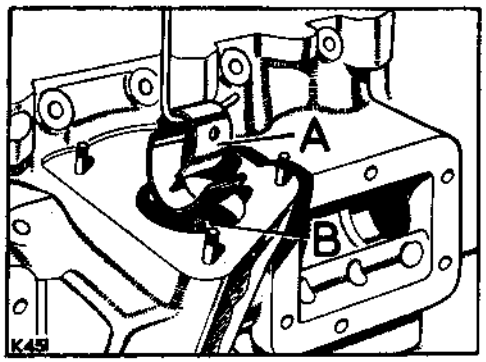


**Fig. A2-152. Front intermediate bearing removal**
A—Collapsed bearing
B—Distributor drive chamber

## Operation A2-38—*continued*

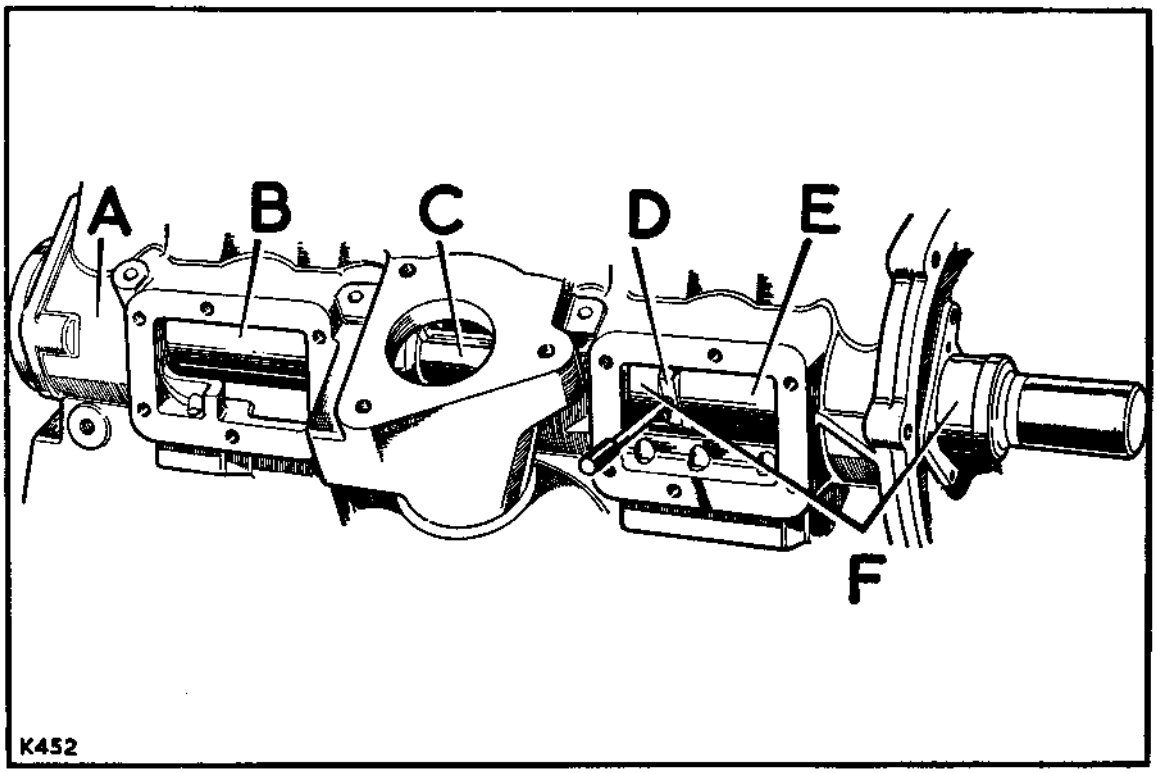


**Fig. A2-153. Fitting camshaft front bearings**

A—Cylinder block
B—Guide tube
C—Bearing fitting bar
D—Spigot
E—Spacer
F—New bearings

6. Place a new bearing on spigot, Part No. 274384, and position it inside the foremost tappet chamber with the bearing nearest the front intermediate housing.

7. Insert the bearing fitting bar into the front bearing housing and feed the spigot on to the bar; withdraw the spigot handle. Turn the spigot to engage the locating shoulder in the spacer, then press the fitting bar inward, turning as necessary to engage the bar slot with the peg in guide tube.

8. When the fitting bar has been pressed in as far as possible by hand, ensure that all locating points are properly engaged, then drive the bearings into position with a hide-faced hammer.

9. The bearings must now be aligned with the oil holes, proceed as follows:

   Partially withdraw bearing fitting bar and remove spigot, Part No. 274384. Slide adaptor, Part No. 531760, on to bar and re-insert bar and drive in until flange of bar abuts on cylinder block. This will align the oil holes on the intermediate bearing.

   Withdraw bar and adaptor and remove spacer, then refit adaptor, Part No. 531760, and align front bearing oil holes by gently tapping tool as required.

10. Remove the bearing fitting tools and check the oil holes for alignment.

11. Remove the two rearmost bearings and fit new camshaft **rear** bearings in the same manner as for front bearings, but remove the spacer from fitting bar and use guide tool, Part No. 274386, instead of the guide tube used when fitting front bearings.

## Operation A2-38—*continued*

### Method 'B', to replace bearings

1. Using special tool, Part No. 274388, or Part No. 605975 (less the adaptor), drift out all the bearings. The two centre bearings can be drifted into the distributor drive chamber and collapsed to enable withdrawal. Note that the two centre and the rear bearings are the same width, whereas the front bearing is wider and has an additional oil feed hole.

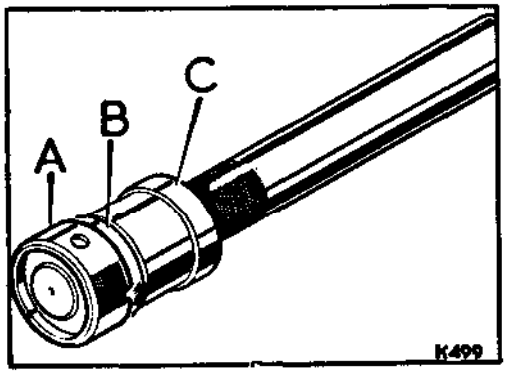


**Fig. A2-154. Replacing camshaft bearings**

A—Camshaft bearing
B—Adaptor
C—Drift

2. To fit the new bearings, the drift, Part No. 274388, and special adaptor, Part No. 531760, or the drift and adaptor complete, Part No. 605975, are required. Proceed as follows:

   (a) With the cylinder block vertical, rear face down, place a new shell bearing into the front camshaft chamber and position it so that it is above the second bearing housing, counting from the front of the block. The chamfer on the bearing edge must be towards the housing bore, and the oil hole in the bearing must be aligned with the innermost oil feed drilling in the housing bore. Accuracy is essential otherwise misalignment of the oil holes may result and once the bearing is in place it cannot be rotated to correct any error. Pencil marks on the bearing outer diameter and the cylinder block adjacent to the housing will assist in checking alignment.

   (b) Having visually aligned the bearing, carefully place inside it the special adaptor, Part No. 531760, or Part No. 605975.

   (c) Maintain the bearing in a level position. Pass the drift, through the front bearing housing into the camshaft chamber so that it rests on top of the adaptor. Commence drifting the bearing into the block. Ensure that the bearing is not drifted in too far, so that the oil feed holes are correctly aligned.

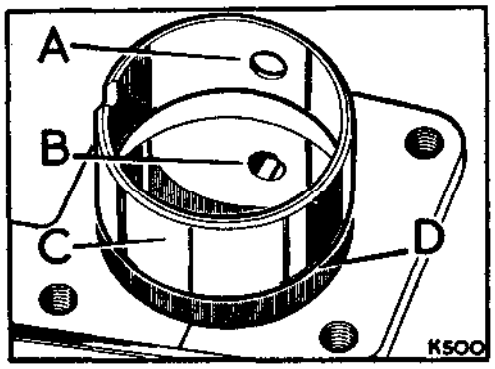


**Fig. A2-155. Aligning oil holes**

A—Oil hole in bearing
B—Oil feed hole in block
C—Pencil marks
D—Chamfer on leading edge

3. Repeat the operation for the front bearing. Note that the front bearing is wider and has a small hole in addition to the large oil feed hole. This small hole aligns with a vertical drilling in the block, which in turn feeds a horizontal drilling for the tappet mechanism. Drift this bearing in so that the outer edge is just below the machined surface of the front face. This is to ensure that when the camshaft thrust plate is fitted it will not stand proud on the bearing edge.

4. Turn over the cylinder block so that the rear face is uppermost, and drift in the two remaining narrow bearings in the manner described in para. 2.

5. Retain the cylinder block in the vertical position, front face downwards, in readiness for the reamering operation.

## Operation A2-38—*continued*

**Reamering the bearings**

1. Locate a guide plug, Part No. 274394, in the new front camshaft bearing and locate, using the end-plate screws. Do not tighten these screws until the reamer, Part No. 274389, is put into position and the guide collar immediately in front of the cutter is entered into the rearmost bearing, which is first to be cut. This precaution is to ensure correct alignment of the reamer. Before commencing the reamering operation it is necessary to turn the engine block to a vertical position, front end facing downwards, in order that the weight of the reamer will assist in the cutting operation. As each bearing is cut the reamer should be held steady by the operator whilst an assistant, using a high pressure airline, blows away the white metal cuttings, before allowing the reamer to enter the next bearing.
2. After the rearmost and the two intermediate bearings have been cut, remove the guide plug, Part No. 274394, before cutting the foremost bearing. Remove the reamer handle and bolt, and carefully remove the reamer, turning it in the same direction as for cutting. Care must be taken to prevent the reamer damaging the foremost bearing as the reamer is removed.

   No lubricant is necessary for the reamering operation, best results are obtained when the bearings are cut dry.
3. Remove the plugs from the ends of oil gallery passage and clean the gallery and oil feed passages to camshaft and crankshaft bearings, using compressed air. Refit the plugs and lock in position. **The cylinder block must be thoroughly cleaned at this stage.**

**Cylinder bores**

1. The bores may be reclaimed by machining up to .040 in. (1,0 mm) maximum oversize, replacement pistons being available in oversize increments of .010 in., .020 in., .030 in. and .040 in. (0,25 mm, 0,5 mm, 0,76 mm and 1,0 mm).
2. Where the maximum permitted boring tolerance is not sufficient to reclaim the bores, cylinder liners may be fitted.

   Fitting the cylinder liners conforms to normal practice. Machine the cylinder block bores to 3.7175 in. + .0005 in. (94,4245 mm + 0,0127 mm). This will provide the liner with a .003 in. to .0045 in. (0.067 mm. to 0,0114 mm) interference fit.
3. Press the liners into the cylinder block. The liners must not be proud of, or more than .002 in. (0,05 mm) below, the top face of the cylinder block. Cylinder liners should then be bored out to standard size, that is, 3.562 in. (90,47 mm) minimum. Liners may be re-bored .010 in. (0,254 mm) oversize.

   Before reassembly, de-glaze the cylinder bores using suitable honing equipment and finally using fine grade abrasive cloth.

When the overhaul is completed, rebuild the engine as follows:

1. Refit the camshaft. Operation A2-37.
2. Refit the crankshaft. Operation A2-35.
3. Refit the pistons and connecting rods. Operation A2-33.
4. Refit the flywheel housing. Operation A2-32.
5. Refit the clutch assembly and flywheel. Operation A2-31.
6. Refit the oil pump. Operation A2-29.
7. Refit the crankcase sump. Operation A2-28.
8. Refit the tappet assemblies. Operation A2-24.
9. Refit the cylinder head. Operation A2-22.
10. Refit the valve gear and rocker shaft. Operation A2-20.
11. Next refit the timing gears and chain and carry out the valve timing procedure. Operation A2-27.
12. Refit the timing chain tensioner. Operation A2-26.
13. Refit the engine front cover. Operation A2-25.
14. Refit the fuel distributor pump drive gears. Operation A2-18.
15. Next refit the fuel distributor pump and carry out the pump timing procedure. Operation A2-17.
16. Refit the external oil filter. Operation A2-16.
17. Refit the engine side covers. Operation A2-14.
18. Refit the starter motor. Operation A2-9.
19. Refit the engine to the vehicle. Operation A2-5 and replenish the lubricating oil.

## Operation A2-38—*continued*

**ENGINE LUBRICANT CAPACITY**
**Bonneted Control Model, 2½ Litre Diesel**

| | | Capacity | Imperial Unit | US Unit | Litres |
|---|---|---|---|---|---|
| 88 | Engine .... .... | 11 pints | 11 pints | 13 pints | 6,0 |
| | Filter .... .... | 1½ pints | 1½ pints | 1.8 pints | 0,85 |
| | Engine and Filter .... | 12½ pints | 12½ pints | 14.8 pints | 6,85 |
| 109 | Engine .... .... | 11 pints | 11 pints | 13 pints | 6,0 |
| | Filter .... .... | 1½ pints | 1½ pints | 1.8 pints | 0,85 |
| | Engine and Filter .... | 12½ pints | 12½ pints | 14.8 pints | 6,85 |

**COOLANT SYSTEM**
**Bonneted Control Model, 2½ Litre Diesel**

| | Capacity | Imperial Unit | US Unit | Litres | Antifreeze | Frost Precaution |
|---|---|---|---|---|---|---|
| 88 | 17½ pints | 17½ pints | 21 pints | 10,0 | 33⅓% | —25°F<br>—32°C |
| 109 | 17½ pints | 17½ pints | 21 pints | 10,0 | 33⅓% | —25°F<br>—32°C |

20. Refit the front floor. Operation A2-4.
21. Refit the radiator and grille panel. Operation A2-3 and refill the coolant system.
22. Refit the air cleaner. Operation A2-2.
23. Refit the bonnet panel. Operation A2-1.

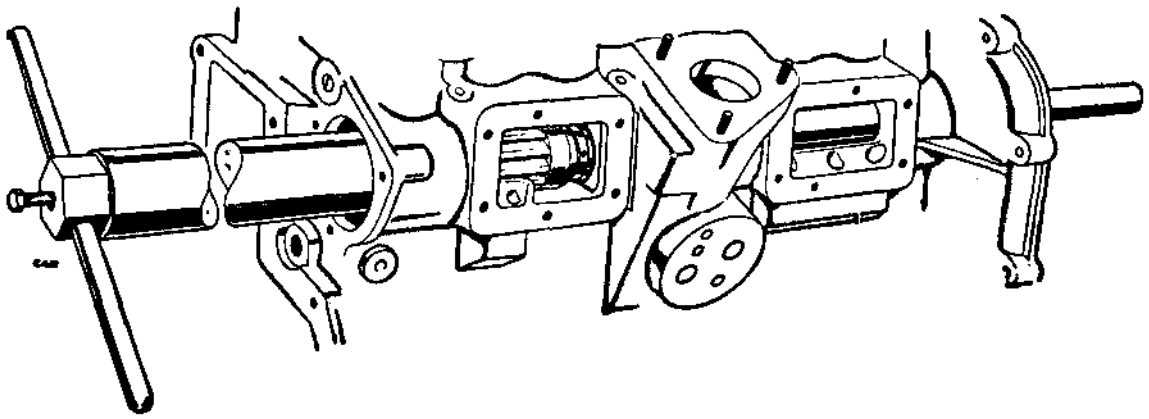

**Fig. A2-156. Reamering camshaft bearings (Engine must be in vertical position)**

## Reclamation of flywheel and starter ring—Operation A2-39

*(For Flywheel remove and refit instructions, Operation A2-31 refers)*

### Wear or scoring on the flywheel pressure face

1. Remove the clutch bolts and dowels from the flywheel.
2. Check the thickness of the flywheel before commencing machining, as it may have been machined previously.

   The maximum amount of metal which may be removed from the flywheel face is .030 in. (0,76 mm). If the face is not satisfactory after machining to these limits, the flywheel must be scrapped. See following chart.
3. Machine the **whole** pressure face, not merely inside the bolts and dowels, until the score marks are removed.

### Starter ring excessively worn or damaged

**If the starter ring is bolted to the flywheel proceed as follows:**

1. Remove the clutch bolts, dowels and primary pinion bush.
2. Machine the flywheel teeth off flush and turn the gear ring spigot to the dimensions given in the following chart.
3. Fit the ring gear to the flywheel, using the original clutch cover fixing bolts. (These bolts should be a tight fit in the flywheel, and must be replaced if in poor condition).
4. Replace the dowel and renew the primary pinion bush if necessary.

**If the starter ring is shrunk on to the flywheel, proceed as follows:**

1. Remove the scrap starter ring by securing the flywheel in a vice fitted with jaw protectors, then drill a $\frac{3}{16}$ in. (4 mm) diameter hole axially between the root of any one tooth and the inner diameter of the starter ring sufficiently deep to weaken the ring. Care must be taken to prevent the drill entering the flywheel.
2. Place a chisel immediately above the drilled hole, and strike it sharply.

   **Important:** The starter ring will normally split harmlessly but on remote occasions rings have been known to fly asunder when split; it is therefore important that the operator should take suitable precautions. For instance, a cloth may be laid over the upper part of the starter ring.
3. Heat the starter ring uniformly to between 220°C and 225°C but do not exceed the higher temperature.

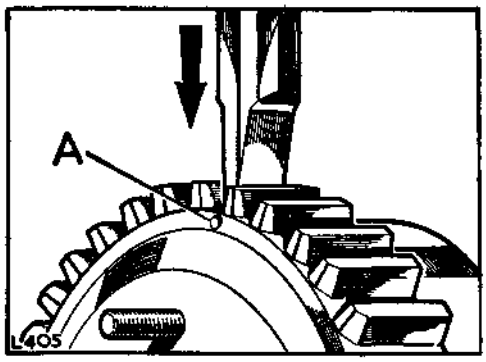


**Fig. A2-157. Removing an unserviceable starter ring**

**A—Drilled hole**

## Operation A2-39—*continued*

4. With the flywheel placed on a suitably flat surface, position the ring on to the flywheel with the square edge of the teeth against the flange.

   There should be a clearance of $\frac{1}{16}$ in. to $\frac{1}{8}$ in. (1,5 mm to 3 mm) between the inner diameter of ring and flywheel if the temperature is correct. Press the starter ring firmly against the flange until the ring contracts sufficiently to grip the flywheel.

5. Allow the flywheel assembly to cool gradually; do not hasten cooling in any way and thereby avoid the setting up of internal stresses in the ring which may cause fracture or failure in some respect.

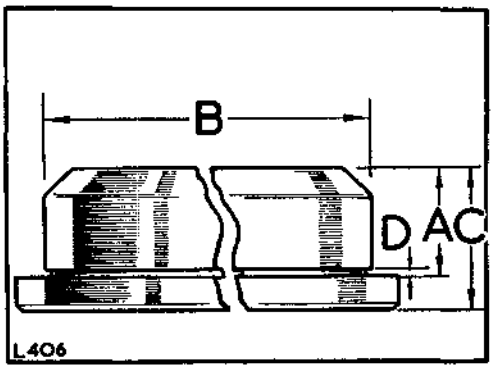


**Fig. A2-158. Flywheel reconditioning**

A—Depth of spigot
B—Spigot diameter
C—Minimum thickness after refacing
D—Undercut

| Models | Flywheel Part Number | Ring Gear Part No. | Dimension 'A' Depth of Spigot | Dimension 'B' Spigot Diameter | Dimension 'C' Minimum thickness after refacing | Dimension 'D' Undercut | Flywheel Part Number when re-conditioned | Remarks |
|---|---|---|---|---|---|---|---|---|
| Series IIA 2¼ litre Diesel models (Two dowel hole type) | 516082 (Can be replaced by 546519) | 510489 | .750 in. (19,0 mm) | 9.562 in. (242,9 mm) | 1.454 in. (36,9 mm) | .062 in. x .031 in. (1,60 x 0,80 mm) deep | 524638 (Can be replaced by 549544) | Steel flywheel. Machine from crankshaft flange side |
| Series IIA 2¼ litre Diesel models (Four dowel hole type) | 546519 (Will replace 516082) | 510489 | .750 in. (19,0 mm) | 9.562 in. (242,9 mm) | 1.454 in. (36,9 mm) | .062 in. x .031 in. (1,60 x 0,80 mm) deep | 549544 (Will replace 524638) | Steel flywheel. Machine from crankshaft flange side. When fitting this flywheel with a diaphragmspringtype clutch it is necessary to remove one dowel and fit two dowels in the same way as detailed for Petrol models. |
| Series IIA 2¼ litre Diesel models (Multi-purpose, two and four dowel accommodation) | 566852 (Will replace 516082 and 546519 | 568431 | — | — | 1.454 in. (36,9 mm) | — | Non-available | Cast-iron flywheel. Detachable ring gear fitted as original equipment. No machining necessary other than for refacing. |

# Fault diagnosis—Engine, 2¼ litre Diesel

| Symptom | Possible cause | Investigation | Remedy |
|---|---|---|---|
| **A—Engine fails to rotate when attempting to start** | Incorrect starting procedure | Follow procedure as described in Owner's Instruction Manual | |
| | Battery leads loose or terminals corroded | Check for condition of leads and terminals | Clean and tighten as necessary |
| | Battery discharged | Check as detailed in Section N | |
| | Starter motor inoperative | Check for loose or dirty connections and for soundness of leads | Clean and tighten at terminals. Replace leads as necessary |
| | | Check starter motor for malfunction, Section N | |
| **B—Engine rotates but fails to start** | Starter motor speed too low | Check battery leads at terminals | Clean and tighten as necessary |
| | | Check state of batteries charge, Section N | When refitting a recharged or replacement battery, check the voltage regulator output setting, Section N. Check also the fan belt tension |
| | Heater plug operation faulty | Check electrical leads to and between heater plugs. If leads sound and connections good, refer to Section N for heater plugs defects location | |
| | Fuel system defects | Check that fuel is reaching injectors, Section L | |
| | | Check condition and setting of injector nozzles, Section L | |
| | Insufficient compression in cylinders | Check tappet clearances | Reset as necessary |
| | | Check tighten the injector fixings and heater plugs in case of external leakage | Tighten to the correct torque loading |
| | | Rotate engine, using starting handle, and check for valves sticking open and for defective valve springs | Carry out the cylinder head overhaul procedure |
| | | Check tighten cylinder head fixings to the correct torque loading | Tighten in the correct sequence |
| | | Remove cylinder head and check cylinder head gasket, valve seats, valve springs, pistons and piston rings for wear | Rectify or replace as necessary |
| **C—Engine starts but immediately stops** | Fuel system defect | Check for fuel starvation as described in Section L | |
| **D—Engine fails to idle** | Fuel system defects | Check setting of slow-running control screw | Reset as necessary |
| | | Check injector nozzle setting. Check injector nozzle auxiliary spray hole for blockage | Refer to Section L |
| | Incorrect tappet clearance | Check and reset as necessary | |
| | Insufficient compression in cylinders | Check and remedy as described in paragraph B | |

## Fault diagnosis—Engine—2¼ litre Diesel—*continued*

| Symptom | Possible cause | Investigation | Remedy |
|---|---|---|---|
| **E—Reduced power and rough running** | Faulty valve operation | Check tappet clearances | Reset |
| | | Remove top cover and check for defective valve springs | Replace in pairs |
| | | Check valves for signs of overheating | Replace as necessary |
| | Fuel system defects | Check for fuel starvation at injector nozzles as described in Section L | |
| | | Check injector nozzle valve seating is correct. Ensure sealing washers are in place and sound | Rectify or replace as necessary |
| | | Check injector nozzles for signs of overheating | Refer to Section L |
| | | Check tighten injectors to correct torque loading | Tighten as necessary |
| | | Check fuel injector pump timing | Reset as necessary |
| | Compression uneven | Check and remedy as listed under 'Insufficient compression in cylinders', paragraph B | |
| **F—Engine overheating** | Defective cooling system | Refer to 'Fault diagnosis', Section K | |
| | Defective lubrication system | Check and remedy as described under 'Low oil pressure', paragraph G | |
| | Fuel system defects | Check for restricted fuel supply to fuel injectors | Refer to Section L |
| | | Check for defective fuel injector nozzles | Refer to Section L |
| | | Check for incorrect fuel injector pump timing | Reset as necessary |
| **G—Low oil pressure** | Insufficient oil supply | Check at engine dipstick | Replenish sump with correct grade lubricating oil, Section X refers |
| | External leakage | Check engine for oil leaks. Ensure oil pressure switch joint washer is sound | Rectify as necessary |
| | Oil pump operation faulty | Check the oil pump intake filter for restriction | Remove foreign matter if necessary. Clean filter in clean fuel |
| | | Check for wear in pump gears assembly | Carry out the oil pump overhaul procedure |
| | Oil pressure relief valve malfunction | Check for foreign matter on ball valve seat | Clean and refit |
| | | Relief valve plunger sticking | Clean and ensure smooth operation before refitting |
| | | Check that oil pump body joint fixings are tight | Tighten fixings |
| | | Relief valve spring weak. Check by substitution of serviceable spring | Replace spring |

## Fault diagnosis—Engine—2¼ litre Diesel—*continued*

| Symptom | Possible cause | Investigation | Remedy |
|---|---|---|---|
| **G—Low oil pressure—cont.** | Excessively worn bearings | Check bearing clearances at main journals, connecting rod big ends and camshaft as necessary | Replace bearings, referring to the appropriate overhaul procedure |
| **H—Oil pressure warning light remains 'ON', with engine running** | Low oil pressure | Refer to paragraph G for checks and remedy | |
| | Oil pressure switch unserviceable | Check by substitution of serviceable component | Replace switch |
| | Electrical fault | Check circuit | Rectify poor connections or replace leads as applicable |
| **J—Warning light fails to glow with engine stopped and ignition switch 'ON'** | | Check warning lamp bulb by substitution of serviceable bulb | Replace bulb |
| | | Check oil pressure switch by substitution of a serviceable switch | Replace switch |
| | | Check electrical circuit | Rectify poor connections or replace leads as applicable |
| **K—Noisy valve mechanism** | Valve operation incorrect | Check for excessive tappet clearances | Reset |
| | | Rotate engine and check for sticking valves and broken or defective valve springs. Check for excessively worn components | Carry out cylinder head overhaul procedure. Replace valve springs |
| **L—Main bearing rattle** | Low oil pressure | Refer to paragraph G for checks and remedy | |
| | Component or assembly defects | Check if main bearing cap fixings are loose | Tighten to correct torque loading |
| | | Check bearing clearance. Examine bearings and crankshaft for wear | Carry out the overhaul procedure |
| **M—Black smoke issues from exhaust** | Fuel system defects | Check for defective fuel injection nozzles as described in Section L | Reset injectors (Section L) or replace as necessary |
| | | Check for incorrect fuel injector pump timing | Reset timing |
| **N—White vapour issues from exhaust** | Internal coolant leakage | Check for coolant leakage into combustion chamber<br>Do not confuse with vapour apparent immediately after starting, caused by condensation in exhaust system | Rectify as necessary |
| | Fuel system defects | Check as described in Para. M | |
| | Insufficient compression in cylinders | Check as described in Para. B | |

## Fault diagnosis—Engine—2¼ litre Diesel—*continued*

| Symptom | Possible cause | Investigation | Remedy |
|---|---|---|---|
| **P—Blue smoke issues from exhaust** | Engine burning oil | Check for blocked or overfilled air cleaner | Rectify as necessary |
| | | Check tappet clearances | Reset as necessary |
| | | Run engine with exhaust manifold removed. Smoke from individual cylinders may indicate a faulty injector | Refer to Section L |
| | | Check for incorrect pump timing. Check that pump drive gear locating screw is not worn or loose | Reset or rectify as necessary |
| | | Check cylinder compression pressures | Carry out the overhaul procedures on cylinder head and piston rings as necessary |

## GENERAL DATA

| | |
|---|---|
| Capacity (piston displacement) | 2286 cc (139.5 cu. in.) |
| Number of cylinders | 4 |
| Bore | 3.562 in. (90,49 mm) |
| Stroke | 3.5 in. (88,9 mm) |
| Compression ratio | 23 to 1 |
| BHP | 62 at 4,000 rpm |
| BMEP | 111 lb. sq. in. (7,8 kg/cm²) at 1,750 rpm |
| Maximum torque | 103 lb. ft. (14,00 mkg) at 1,750 rpm |
| Firing order | 1—3—4—2 |
| Piston speed at 4,000 rpm | 2,333 ft./min. |

## DETAIL DATA

### Camshaft

| | |
|---|---|
| Journal diameter | 1.842 in.—.001 in. (46,8 mm—0,02 mm) |
| Clearance in bearing | .001 in. to .002 in. (0,02 mm to 0,05 mm) |
| End-float | .0025 in to .0055 in. (0,06 mm to 0,13 mm) |
| Cam lift—inlet | .262 in. (6,65 mm) |
| Cam lift—exhaust | .279 in. (7,10 mm) |

### Camshaft bearing

| | |
|---|---|
| Type | Split—steel backed, white metal lined |
| Internal diameter (line reamed in position) | 1.843 in.+.0005 in. (46,81 mm+0,012 mm) |

### Connecting rods

| | |
|---|---|
| Bearing fit on crankpin | .001 in. to .0025 in. (0,02 mm to 0,06 mm) clearance |
| Bearing nip | .002 in. to .004 in. (0,05 mm to 0,10 mm) |
| End-float at big-end | .007 in. to .011 in. (0,20 mm to 0,30 mm) |
| Gudgeon pin bush fit in small end | .002 in. to .004 in. (0,05 mm to 0,10 mm) interference |
| Gudgeon pin bush internal diameter—reamed in position | 1.1875 in.+.0005 in. (30,15 mm+0,012 mm) |
| Fit of gudgeon pin in bush | .0002 in. to .0008 in. (0,005 mm to 0,02 mm) clearance |

### Crankshaft

| | |
|---|---|
| Journal diameter | 2.5 in.—.001 in. (63,5 mm—0,02 mm) |
| Crankpin diameter | 2.313 in.—.001 in. (51,6 mm—0,02 mm) |
| End-float (controlled by thrust washers at centre bearings | .002 in. to .006 in. (0,05 mm to 0,15 mm) |

Regrind sizes:

| Undersize | Journal dia. | Crankpin dia. |
|---|---|---|
| .010 in. (0,25 mm) | 2.490 in. (63,24 mm) | 2.303 in. (58,49 mm) |
| .020 in. (0,50 mm) | 2.480 in. (62,99 mm) | 2.293 in. (58,24 mm) |
| .030 in. (0,76 mm) | 2.470 in. (62,73 mm) | 2.283 in. (57,98 mm) |
| .040 in. (1,01 mm) | 2.460 in. (62,48 mm) | 2.273 in. (57,73 mm) |

### Flywheel

| | |
|---|---|
| Number of teeth | 100 |
| Thickness | 1.484 in. (38 mm) |
| Maximum permissible run-out on flywheel face | .002 in. (0,05 mm) |
| Maximum refacing depth | .030 in. (0,76 mm) |
| Minimum thickness after grinding | 1.454 in. (36,9 mm) |

### Markings

| | |
|---|---|
| TDC | When opposite pointer, No. 1 piston is at top dead centre |
| EP | When opposite pointer, No. 1 exhaust valve should be fully open |
| 16° mark (up to engine suffix K)<br>15° mark (from engine suffix L) | When opposite pointer, with both valves on No. 1 cylinder closed, indicates start of injection |

## DETAIL DATA—*continued*

**Primary pinion bush:**

| | |
|---|---|
| Fit in flywheel | .001 in. to .003 in. (0,02 mm to 0,07 mm) interference |
| Internal diameter—reamed in position | .878 in.+.0005 in. (22,3 mm+0,013 mm) |
| Fit of shaft in bush | .001 in. to .0035 in. (0,02 mm to 0,08 mm) clearance |

**Gudgeon pin**

| | |
|---|---|
| Fit in piston | Zero to .0002 in. (0,005 mm) interference |
| Fit in connecting rod bush | .0002 in. to .0008 in. (0,005 mm to 0,02 mm) clearance |

**Injection pump**

| | |
|---|---|
| Type | Distributor, self-governing |
| Injection takes place | 16° (engines up to suffix K) |
| Injection takes place | 15° (engines from suffix 'L' onwards) |
| Injector | |
| Type | CAV Pintaux |
| Nozzle size | BDNO/SP6209 |

**Main bearings**

| | |
|---|---|
| Clearance on crankshaft journal | .001 in. to .002 in. (0,02 mm to 0,05 mm) |
| Bearing nip | .004 in. to .006 in. (0,10 mm to 0,15 mm) |

**Oil pump**

| | |
|---|---|
| Type | Skew gear |
| Drive | Splined shaft from camshaft skew gear |
| End float of gears: | |
| Steel gear | .002 in. to .005 in. (0,05 mm to 0,13 mm) |
| Aluminium gear | .003 in. to .006 in. (0,07 mm to 0,15 mm) |
| Radial clearance of gears | .001 in. to .004 in. (0,02 mm to 0,010 mm) |
| Backlash of gears | .006 in. to .012 in. (0,15 mm to 0,30 mm) |

**Oil pressure, engine warm**

| | |
|---|---|
| At 2,000 rpm | 45 to 65 lb sq in. (3,16 to 4,56 kg/cm²) |

**Oil pressure relief valve**

| | |
|---|---|
| Type | Non-adjustable |
| Relief valve spring | |
| Free length | 2.670 in. (67,82 mm) |
| Compressed length at 5.7 lb (2,58 kg) load | 2.45 in. (61,23 mm) |

**Pistons**

| | |
|---|---|
| Type | Light alloy, with swirl-inducing recess in crown |
| Clearance in bore, measured at bottom of skirt at right angles to gudgeon pin | .004 in. to .005 in. (0,10 mm to 0,12 mm) |
| Fit of gudgeon pin in piston | Zero to .0002 in. (0,005 mm) interference |
| Gudgeon pin bore | 1.187 in.+.0005 in. (30,14 mm+0,012 mm) |

**Piston rings**

| | |
|---|---|
| Compression No. 1 | |
| Type | Square friction edge—chromium plated |
| Gap in bore | .014 in. to .019 in. (0,40 mm to 0,50 mm) |
| Clearance in groove | .0025 in. to .0045 in. (0,06 mm to 0,114 mm) |
| Compression—Nos. 2 and 3 | |
| Type | Bevelled friction edge. Marked 'T' on upper side |
| Gap in bore | .010 in. to .015 in. (0,25 mm to 0,40 mm) |
| Clearance in groove | .0025 in. to .0045 in. (0,06 mm to 0,114 mm) |
| Scraper No. 4 | |
| Early type, one piece | Slotted, square friction edge, double landed |
| Gap in bore | .010 in. to .015 in. (0,25 mm to 0,40 mm) |
| Clearance in groove | .0025 in. to .0045 in. (0,06 mm to 0,114 mm) |

## DETAIL DATA—*continued*

| | |
|---|---|
| Scraper No. 4 | |
| Later type, three piece | Expander and rails |
| Gap in bore | .015 in. to .045 in. (0,38 mm to 1,14 mm) |
| Clearance in groove | .0015 in. to .0025 in. (0,038 mm to 0,064 mm) |

### Push-rod tubes

| | |
|---|---|
| Fit in cylinder head | .0005 in. to .002 in. (0,01 mm to 0,05 mm) interference on large diameter. Full contact fit at chamfered edges of tube and cylinder head |

### Rocker gear

| | |
|---|---|
| Bush internal diameter (reamed in position) | .530 in.+.001 in. (13,4 mm+0,02 mm) |
| Shaft clearance in rocker bush | .0005 in. to .0025 in. (0,0127 mm to 0,062 mm) |
| Tappet clearance | .010 in. (0,25 mm) hot or cold |

### Timing chain tensioner

| | |
|---|---|
| Fit of bush in cylinder | .003 in. to .005 in. (0,07 mm to 0,12 mm) interference |
| Fit of bush in idler wheel | .001 in. to .003 in. (0,02 mm to 0,07 mm) interference |
| Fit of idler wheel on stub shaft | .001 in. to .003 in. (0,02 mm to 0,07 mm) clearance |
| Fit of piston in cylinder bush | .0003 in. to .0015 in. (0,008 mm to 0,038 mm) clearance |

### Thrust bearings, crankshaft

| | |
|---|---|
| Type | Semi-circular, steel back, tin plated on friction surface |
| Standard size, total thickness | .093 in.—.002 in. (2,36 mm—0,05 mm) |
| Oversizes | .0025 in. (0,06 mm); .005 in. (0,12 mm); .0075 in. (0,18 mm); .010 in. (0,25 mm) |

### Valves

| | |
|---|---|
| Inlet valve | |
| Diameter (stem) | .3112 in.—.0005 in. (7,90 mm—0,013 mm) |
| Face angle | 45°—¼ |
| Exhaust valve | |
| Diameter (stem) | .3415 in.—.0005 in. (8,67 mm—0,013 mm) |
| Face angle | 45°—¼ |
| Fit of inlet valves in guides | .0013 in. to .003 in. (0,033 mm to 0,07 mm) clearance |
| Fit of exhaust valves in guides | .0023 in. to .0038 in. (0,058 mm to 0,096 mm) clearance |
| Valve seat | |
| Seat angle (inlet and exhaust) | 45°+¼ |

### Valve springs

| | |
|---|---|
| Early type: | |
| Inner | |
| Length—free | 1.61 in. (40,9 mm) |
| Length under 12 lb (5,44 kgs) load | 1.454 in. (36,9 mm) |
| Outer | |
| Length—free | 1.768 in. (44,9 mm) |
| Length under 33 lb (14,96 kgs) load | 1.579 in. (40,1 mm) |
| Later type: | |
| Inner | |
| Length—free | 1.680 in. (42,67 mm) |
| Length under 18 lb (8,0 kgs) load | 1.466 in. (37,23 mm) |
| Outer | |
| Length—free | 1.822 in. (46,28 mm) |
| Length under 47 lb (20,9 kgs) load | 1.587 in. (40,3 mm) |

## DETAIL DATA—*continued*

### Valve timing

| | |
|---|---|
| Inlet opens | 16° BTDC |
| Inlet closes | 42° ABDC |
| Inlet peak | 103° ATDC |
| Exhaust opens | 51° BBDC |
| Exhaust closes | 13° ATDC |
| Exhaust peak | 109° BTDC |

### Vertical drive shaft gear

| | |
|---|---|
| Backlash | .006 in. to .010 in. (0,15 mm to 0,25 mm) |
| Internal diameter of bush | 1.00 in.+.001 in. (25,4 mm+0,02 mm) |
| Fit of gear in bush | .001 in. to .003 in. (0,02 mm to 0,07 mm) clearance |

### Vibration damper (early models)

| | |
|---|---|
| Fit of bushes in flywheel and back plate | .002 in. to .004 in. (0,05 mm to 0,10 mm) |
| Internal diameter of bushes (reamed in position) | 1.917 in.+.001 in. (48,7 mm+0,02 mm) |
| Fit of bushes on driving flange | .001 in. to .003 in. (0,02 mm to 0,07 mm) clearance |
| Maximum permissible run-out of flywheel | .002 in. (0,05 mm) |

# SECTION A3—2.6 LITRE PETROL ENGINE

# INDEX

**Note:** A comprehensive detailed Index is included at the end of this manual


| Description of Listed Operations | Operation Number | |
|---|---|---|
| | Remove/Refit | Overhaul |
| Bonnet panel | A3-1 | — |
| Air cleaner—remove, clean and refit | A3-2 | — |
| Radiator and grille panel assembly | A3-3 | — |
| Gearbox tunnel and front panel | A3-4 | — |
| Engine | A3-5 | — |
| Carburetter | A3-6 | Section L |
| Oil pressure switch | A3-7 | Section N |
| Exhaust manifold | A3-8 | — |
| Starter motor | A3-9 | Section N |
| Dynamo or alternator | A3-10 | Section N |
| Water pump | A3-11 | Section K |
| Thermostat | A3-12 | Section K |
| Rocker oil feed pipe | A3-13 | — |
| Engine breather box | A3-14 | — |
| External oil filter, replace element | A3-15 | — |
| External oil filter | A3-16 | — |
| Ignition timing procedure | A3-17 | — |
| Distributor | A3-18 | Section N |
| Tappet adjustment | A3-19 | — |
| Top rockers and shafts | A3-20 | — |
| Cylinder head | A3-21 | A3-22 |
| Engine front cover and oil seal | A3-23 | — |
| Timing chain tensioner | A3-24 | — |
| Timing gears and chain, including valve timing procedure | A3-25 | — |
| Side rockers and shafts | A3-26 | — |
| Crankcase sump and oil strainer | A3-27 | — |
| Oil pump and drive shaft | A3-28 | A3-29 |
| Clutch assembly and flywheel | A3-30 | Section B |
| Rear main bearing oil seal and flywheel housing | A3-31 | — |
| Pistons and connecting rods | A3-32 | A3-33 |
| Crankshaft and main bearings | A3-34 | A3-35 |
| Camshaft and bearings | A3-36 | — |
| Cylinder block | — | A3-37 |
| Reclamation of flywheel | A3-30 | A3-38 |

This Section concerns remove, refit and overhaul procedures for the 2.6 litre petrol engine.

When carrying out a complete engine overhaul, the section can be worked straight through in the order presented. Alternatively, the individual operations which form the greater part of maintenance work undertaken by Distributors and Dealers and which are detailed under the appropriate headings will be found to be complete in themselves.

Some operations are marked with an asterisk (*) to indicate that they can be carried out with the engine installed. In all other cases it is necessary to remove the engine unit in order to carry out the work detailed.

Where LH (left-hand) or RH (right-hand) appears in the text this indicates LH or RH side of vehicle or engine when viewed from the rear.

## Brief description of engine

The engine is a six-cylinder unit with the block cast integrally with the crankcase, having a bore of 3.063 in. (77,8 mm), a stroke of 3.625 in. (92,075 mm) and a capacity of 160.3 cu. in. (2,625 cc).

An aluminium alloy cylinder head which is inclined on the cylinder block gives high-efficiency combustion chambers. Overhead inlet and inclined side exhaust valves are fitted, and the pistons are of inverted 'V' shape on the crown to conform to the special combustion chamber shape.

The camshaft is driven by a double roller chain which has a hydraulically operated tensioner. The seven-bearing crankshaft is fitted with a torsional vibration damper.

Lubrication is by a large capacity oil pump which delivers oil under pressure throughout the engine and a full-flow oil filter is fitted.

Full engine data is to be found in the Detail Data provided at the end of this Section.

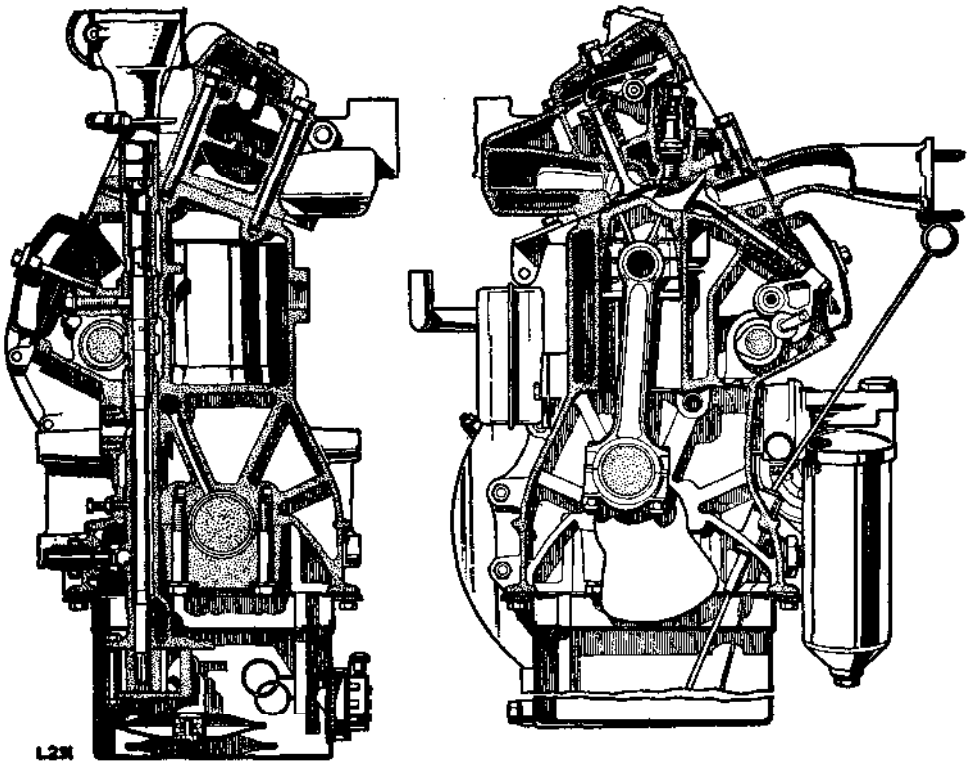


**Cross-section view of engine**

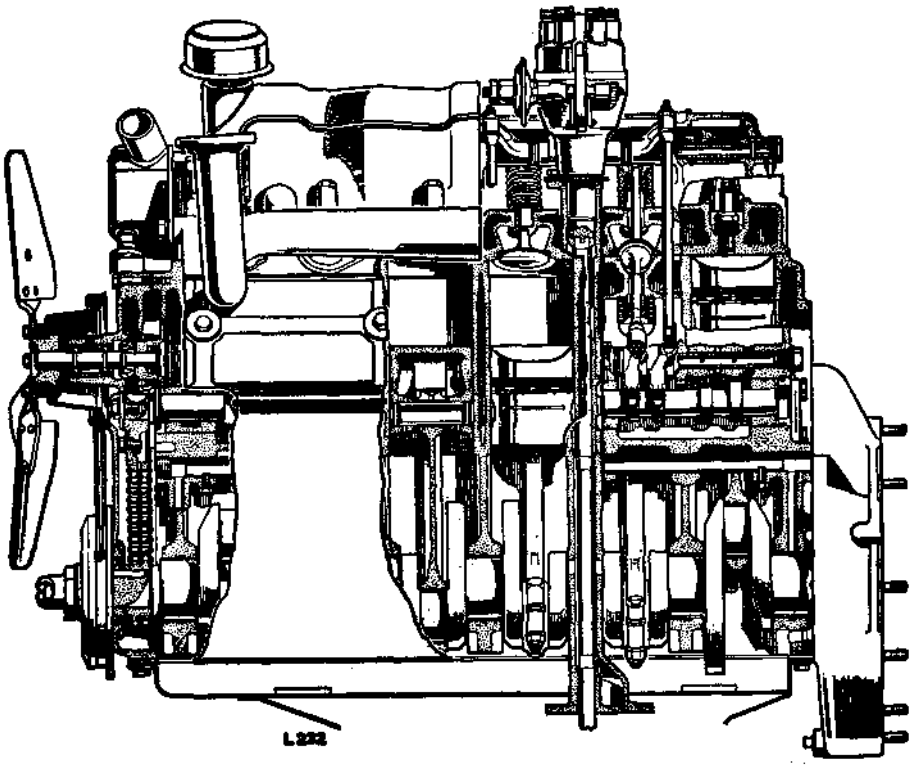


**Longitudinal section of engine**

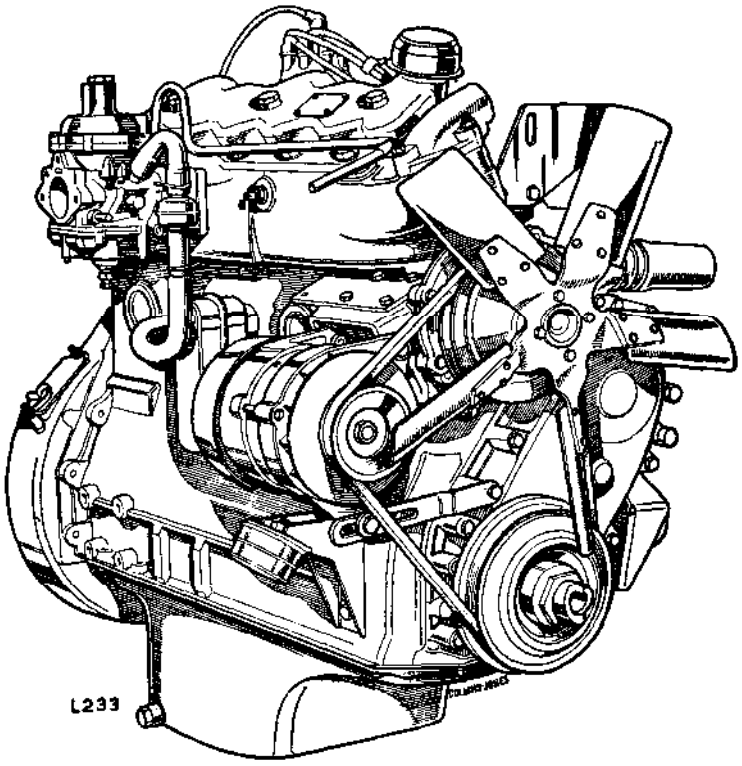


**General view of engine, RH side**

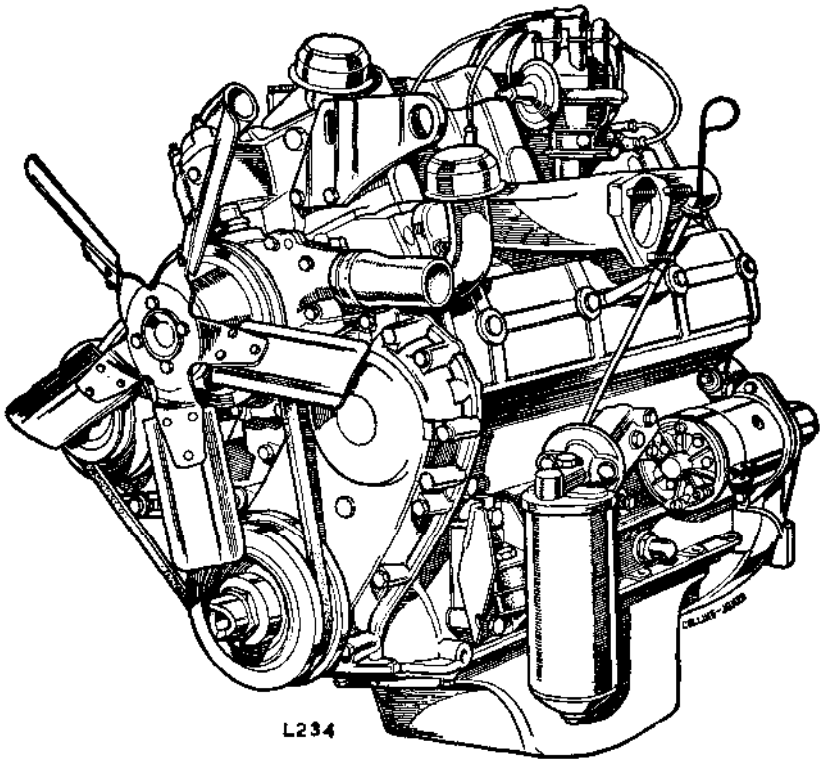


**General view of engine, LH side**

## *Bonnet panel, remove and refit—Operation A3-1

Workshop hand tools:
Screwdriver (medium), Pliers

### To remove

1. Remove the spare wheel from the bonnet panel, if fitted.
2. Remove fixings at prop rod and bonnet hinge.
3. Remove bonnet panel.

### To refit

1. Refit the bonnet panel, using suitable coverings on the wings to avoid damage to paintwork.
2. Refit the spare wheel, if fitted, to bonnet panel.

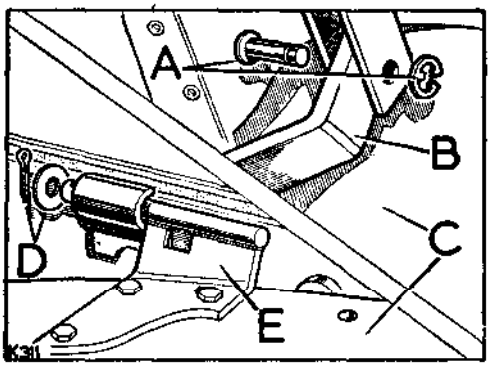


**Fig. A3-1. Fixings at bonnet panel**

A—Prop rod fixings
B—Bonnet prop rod
C—Bonnet panel
D—Bonnet hinge fixings, RH side only
E—Bonnet hinge

## *Air cleaner, remove, clean and refit—Operation A3-2

Workshop hand tools:
Spanner sizes: $\frac{7}{16}$ in. AF open ended
Screwdriver (medium)

### To remove

1. Lift and prop bonnet.
2. Remove air intake hose from carburetter inlet.
3. Slacken the fixings and move aside the retaining strap.
4. Remove air cleaner complete with hose.

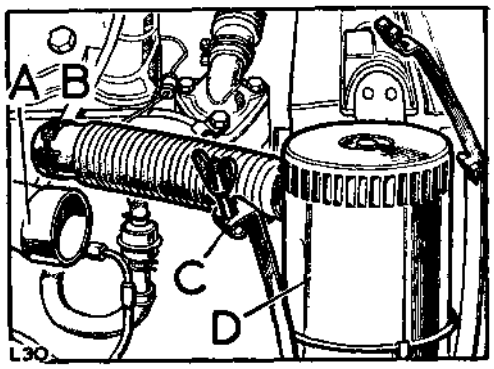


**Fig. A3-2. Air cleaner and hose fixings**

A—Carburetter inlet
B—Hose fixings
C—Retaining strap fixings
D—Air cleaner

### To dismantle and clean

1. Separate the air cleaner body assembly from the oil container, retained by clips.
2. Drain the oil and withdraw the wire mesh unit.
3. Wash all components in clean fuel.

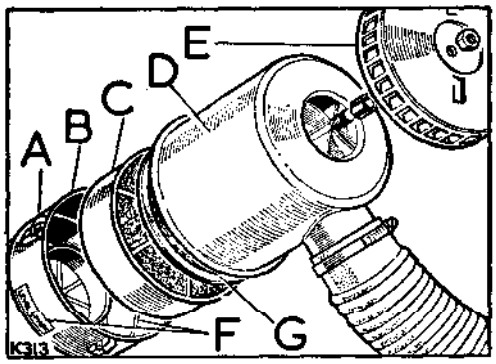


**Fig. A3-3. Exploded view of air cleaner**

A—Hinged clips
B—Oil container
C—Wire mesh unit
D—Air cleaner and mesh assembly
E—Air intake cap and fixing
F—Oil level mark
G—Sealing washer

### To assemble

1. Fill the oil container with clean engine oil to the oil level mark on the container. See Fig. A3-3.
2. Reverse the dismantling procedure, fitting a new sealing washer between the oil container and the air cleaner body.

### To refit

1. Refit air cleaner and hose, if necessary reposition the air cleaner body relative to the oil container to prevent the hinged clips from fouling on the retaining strap supports when fitted.

*Operations marked with an asterisk (*) can be carried out with the engine installed in the vehicle*

## *Radiator and grille panel assembly, remove and refit—Operation A3-3

Workshop hand tools:
Spanner sizes: $\frac{7}{16}$ in. x $\frac{1}{2}$ in. AF open ended, 2 off, 2 BA open ended
Screwdriver (medium), Pliers

**To remove**

1. Remove bonnet. Operation A3-1.
2. Disconnect battery leads.
3. Remove front apron panel.

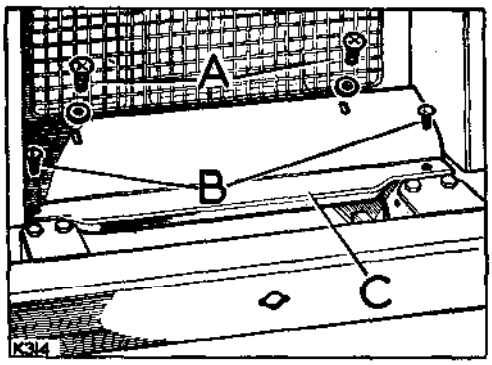


**Fig. A3-4. Apron panel fixings**

A—Fixings at cross member brackets
B—Fixings at side members
C—Apron panel

4. Remove nameplate and radiator grille.

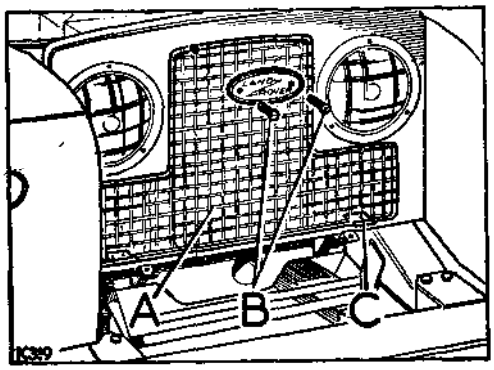


**Fig. A3-5. Radiator grille fixings**

A—Radiator grille
B—Fixings for nameplate and grille
C—Support brackets

5. Remove radiator cap, drain off coolant.

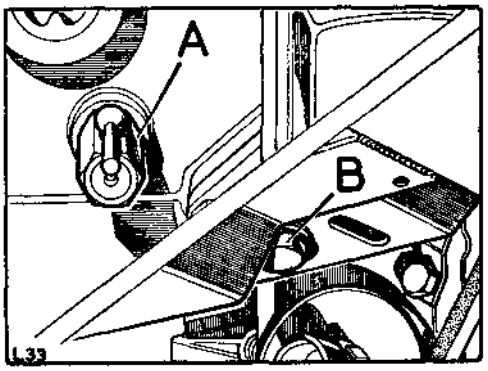


**Fig. A3-6. Coolant drain taps location**

A—At engine block, RH side
B—At radiator

6. Remove shroud from radiator fan cowl.

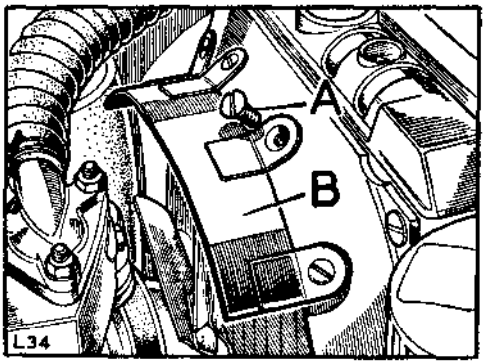


**Fig. A3-7. Fan shroud fixings**

A—Fixings for fan shroud
B—Fan shroud

7. Slacken fixings and detach radiator coolant hoses.
8. Remove the fan blades fixings and lower the fan blades to rest on lower part of fan cowl. Remove the fan blades when access is obtained during grille panel removal.

*Operations marked with an asterisk (*) can be carried out with the engine installed in the vehicle*

## Operation A3-3—*continued*

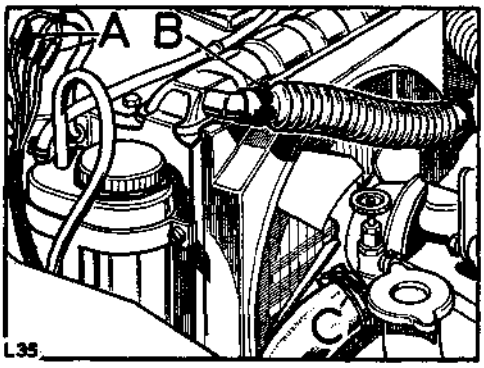


**Fig. A3-8. Coolant hose and leads connectors**

A—Snap connectors (3 off each side of vehicle)
B—Fixings at top hose
C—Fixings at bottom hose

9. Disconnect the electrical leads for the front lamps at the snap connectors.
10. Remove the grille panel to front wings fixings, the securing nuts and washers are located in the respective wheelarches.
11. Remove the grille panel fixings at the brackets on the chassis cross member.

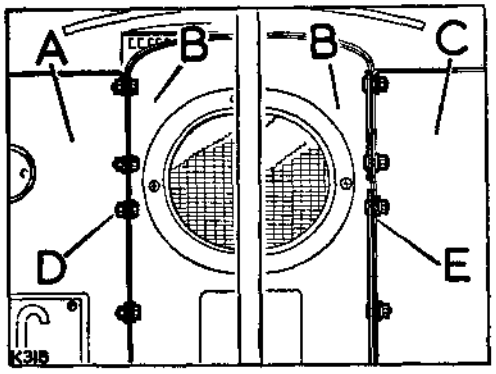


**Fig. A3-9. Radiator grille panel fixings**

A—Front wing, RH side
B—Radiator grille panel
C—Front wing, LH side
D—Fixings at wheelarch, RH
E—Fixings at wheelarch, LH

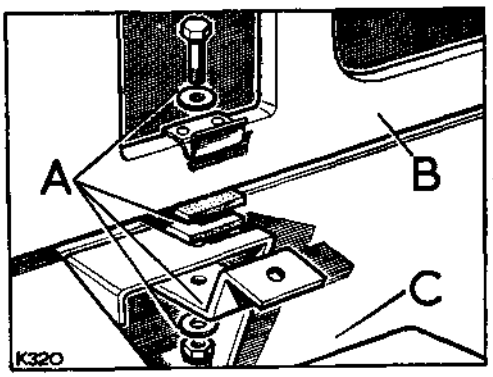


**Fig. A3-10. Fixings at chassis cross member**

A—Panel fixings
B—Radiator grille panel
C—Chassis cross member

12. Carefully withdraw the assembly and the previously released fan blades from the engine compartment.

### To refit

1. Refit the radiator grille and radiator complete on to the vehicle. Fit the fan blades to the fan pulley before engaging the grille panel fixings. See Figs. A3-10 and A3-9 for fixings details.
2. Make the electrical connections at the snap connectors, referring to Fig. A3-8 and the appropriate circuit diagram, if necessary, in Section N.
3. Connect the coolant hoses and replenish the engine coolant system, allowing a free flow through the drain taps before closing them. Fig. A3-8 refers. Fill the radiator header tank to within ½ in. to ¾ in. (12 mm to 19 mm) below the bottom of the filler neck.

**Coolant System Capacity**
**Bonneted Control Model, 2.6 Litre Petrol**

| Imperial Pints | U.S. Pints | Litres | Antifreeze | Frost Precaution |
|---|---|---|---|---|
| 20 | 24 | 11,2 | 33⅓% | — 32°C (— 25°F) |

4. Refit the front apron panel. Fig. A3-4 refers.
5. Connect battery lead.
6. Refit the bonnet panel. Operation A3-1.

## *Gearbox tunnel and front panel, remove and refit—Operation A3-4

Workshop hand tools:
Spanner sizes: $\frac{7}{16}$ in. AF, $\frac{7}{16}$ in. BSF open end, $\frac{7}{16}$ in. AF socket
Screwdriver (medium)

### To remove

1. Unscrew the knob and locknut from the transfer gear lever.
2. Remove the fixings and withdraw the dust cover from the transfer gear lever.
3. Unscrew the knob and locknut from the four-wheel drive lever, and withdraw the spring and ferrule.
4. Remove the gearbox tunnel cover.
5. Remove the gearbox tunnel front panel.

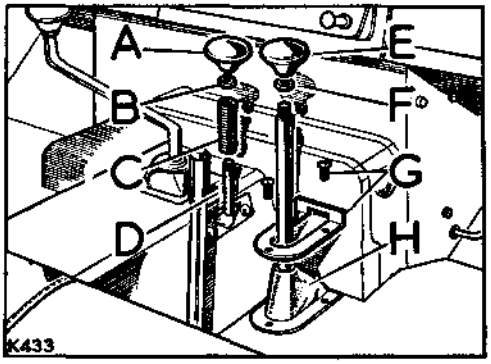


**Fig. A3-11. Four wheel drive and transfer levers**

A—Knob, four-wheel drive lever
B—Locknut for knob
C—Spring
D—Ferrule
E—Knob, transfer gear lever
F—Locknut for knob
G—Fixings for dust cover
H—Dust cover

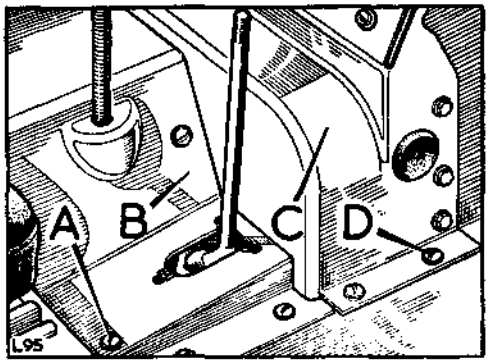


**A3-12. Front floor**

A—Fixings, tunnel cover (9 off)
B—Gearbox tunnel cover
C—Front panel for gearbox tunnel cover
D—Fixings, front panel (15 off)

### To refit

1. Reverse the removal procedure, using waterproof sealant between the joint flanges of the front floor and the chassis. A suitable sealant is 'Sealastrip', manufactured by Expandite Ltd., Chase Road, London NW10, England.
2. Adjust the four-wheel drive lever during assembly as follows: Fit the ferrule, spring and locknut to the lever, depress the lever and adjust the locknut until the compressed spring length is $2\frac{5}{16}$ in. — $\frac{1}{16}$ in. (58 mm — 1 mm), then fit the knob and tighten the locknut.

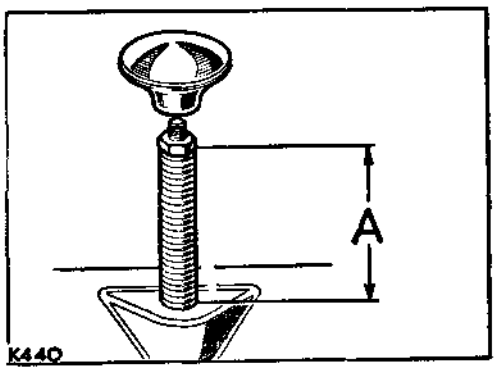


**Fig. A3-13. Adjusting four-wheel drive control lever**

A—$2\frac{5}{16}$ in.—$\frac{1}{16}$ in. (58 mm — 1 mm)

*Operations marked with an asterisk (*) can be carried out with the engine installed in the vehicle*

## Engine, remove and refit—Operation A3-5

Workshop hand tools:
Spanner sizes: $\frac{7}{16}$ in., $\frac{9}{16}$ in., $\frac{15}{16}$ in. AF
$\frac{3}{4}$ in., $\frac{1}{2}$ in., $\frac{7}{8}$ in. AF
$\frac{3}{8}$ in. Whit, $\frac{1}{2}$ in. BSF

Special tools:
Engine sling, Part No. 600963

### To remove

1. Remove bonnet panel. Operation A3-1.
2. Remove air cleaner. Operation A3-2.
3. Remove radiator and grille panel. Operation A3-3.
4. Remove the gearbox cover. Operation A3-4.
5. Disconnect the following items at the left-hand side of the engine; refer to Fig. A3-14 for location of items:
   (a) Front exhaust pipe from manifold.
   (b) Exhaust heat shield.
   (c) Starter motor leads
   (d) Oil pressure switch lead
   (e) Engine earth cable at chassis side member.

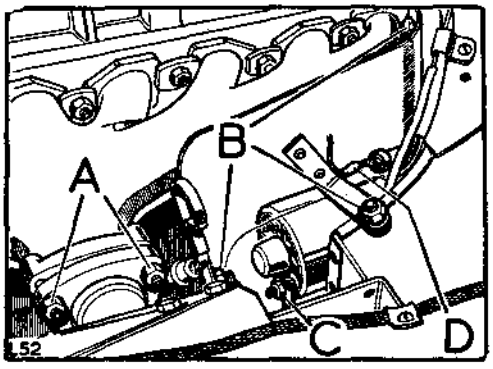


**Fig. A3-14. View of engine, LH side**

A—Front exhaust pipe fixings
B—Exhaust heat shield fixings
C—Starter motor leads
D—Oil pressure switch lead

6. Disconnect the following items at the right hand side of the engine, refer to Fig. A3-15 and A3-16 for location of items.
   (a) Heater hoses
   (b) Switch lead at ignition coil.
   (c) Accelerator linkage at dash panel.
   (d) Speedometer cable at engine block clips.
   (e) Leads for cold start and coolant temperature indicators.
   (f) Dynamo leads.
   (g) Hose at brake servo unit.
   (h) Fuel feed pipe at carburetter
   (j) Cold start control cable.

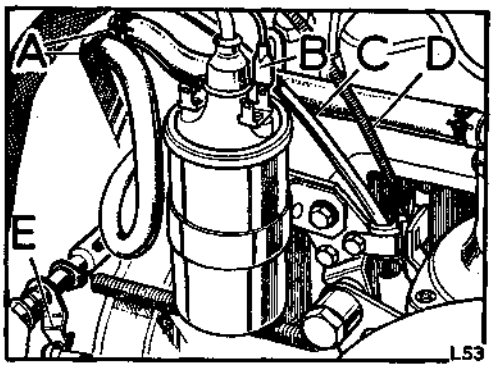


**Fig. A3-15. View of engine, RH side, front**

A—Heater hoses
B—Switch lead
C—Speedometer cable
D—Cold start control cable
E—Accelerator linkage, spring loaded

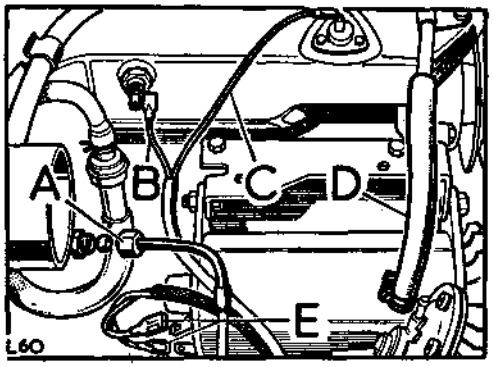


**Fig. A3-16. View of engine, RH side, rear**

A—Fuel feed pipe
B—Cold start warning light lead
C—Coolant temperature lead
D—Servo unit hose
E—Dynamo leads

## Operation A3-5—*continued*

7. Remove the engine front mountings upper and lower fixings.

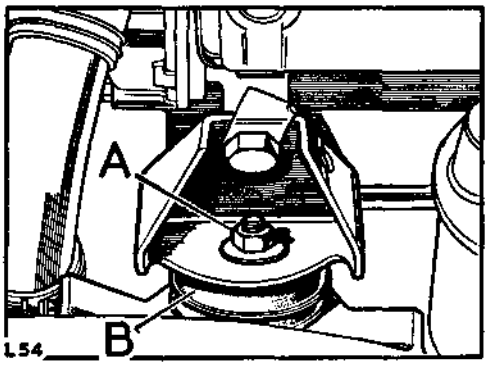


**Fig. A3-17. Front mountings arrangement (2 off)**

A—Upper fixing
B—Suspension rubber with integral studs

8. Fit a suitable lifting sling and support the engine weight.

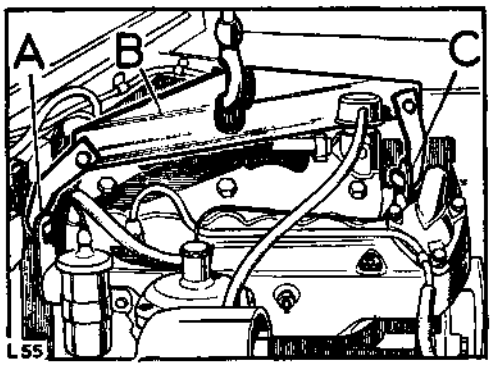


**Fig. A3-18. Engine lifting sling in position**

A—Rear lifting bracket
B—Sling, Part No. 600963
C—Front lifting bracket

9. Support the gearbox, using suitable packing blocks or a jack, and remove the bell housing to flywheel housing fixings.

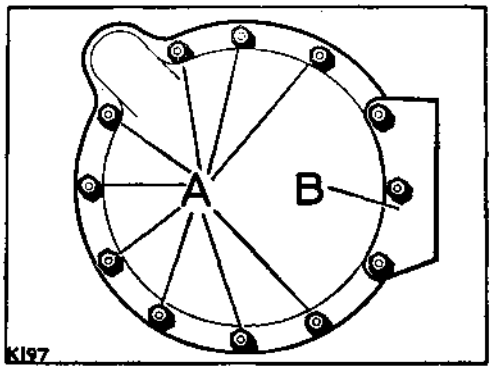


**Fig. A3-19. Bell housing fixings**

A—Fixings, bell housing to engine
B—Fixings, clutch slave cylinder mounting

10. Pull the engine forward sufficient to disengage the drive from the gearbox. Ensure that all cables, pipes, etc. are clear then hoist the engine from the vehicle.

### To refit

1. Engage a gear to prevent gearshaft rotation and offer the engine to the gearbox. If necessary, rotate the engine sufficient to align the gearbox primary pinion with the clutch plate splines.

   When aligned, push the engine fully to the rear and secure the bell housing to the flywheel housing, tightening the fixings evenly.

2. Lift the engine sufficient to remove the packing or jack from beneath the gearbox and insert the engine front mounting rubbers.
3. Lower the engine and fit the upper and lower fixings to the engine. Fig. A3-17 refers.
4. Remove the engine lifting sling.
5. At the left hand side of the engine refit the electrical leads to the starter motor and oil pressure switch.

## Operation A3-5—*continued*

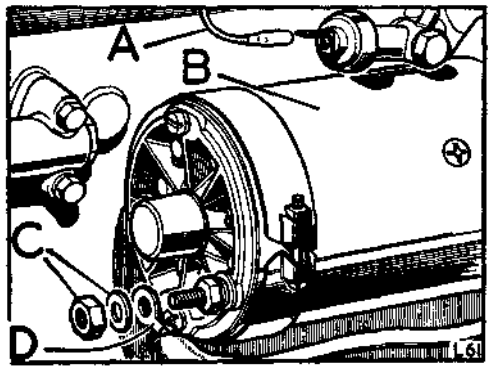


**Fig. A3-20. Starter motor and oil pressure switch**

A—Oil pressure switch lead
B—Starter motor
C—Starter motor lead and fixings
D—Protection cover and feed lead

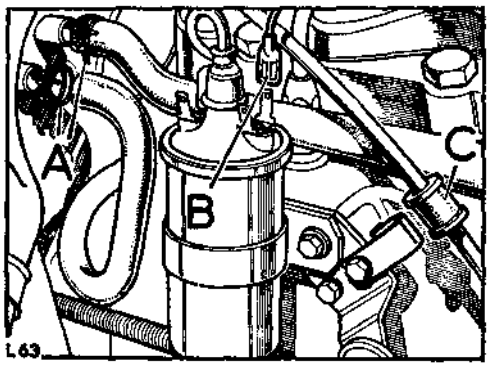


**Fig. A3-21. Ignition coil and heater hoses**

A—Heater hose fixings
B—Switch lead
C—Clip for speedometer cable

6. Refit the exhaust heat shield, if applicable, and fit the front exhaust pipe to the manifold. Fig. A3-14 refers.
7. At the right hand side of the engine refit the switch lead to the ignition coil, connect the heater hoses and secure the speedometer cable in the upper clip.
8. Reconnect the accelerator linkage at the dash panel and engage the speedometer drive cable in the adjacent clip.

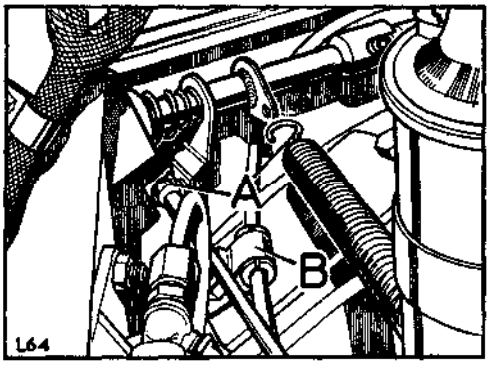


**Fig. A3-22. Accelerator linkage**

A—Spring loaded linkage
B—Clip for speedometer cable

9. Refit the leads to the cold start and coolant temperature indicators and to the dynamo, referring to Fig. A3-16 for details.
10. Refit the fuel inlet pipe and the cold start control cables at the carburetter.
11. Refit the gearbox covers. Operation A3-4.
12. Refit the radiator and grille panel assembly and replenish the coolant system. Operation A3-3.
13. Refit the air cleaner. Operation A3-2.
14. Refit the bonnet panel. Operation A3-1.

## *Carburetter, remove and refit—Operation A3-6

*(For overhaul procedures, Section L refers)*

Workshop hand tools:
Spanner sizes—Zenith carburetter: $\frac{7}{16}$ in., $\frac{1}{2}$ in. AF open end, 2 BA open end
Spanner sizes—SU carburetter: $\frac{3}{8}$ in., $\frac{7}{16}$ in., $\frac{1}{2}$ in., $\frac{3}{4}$ in. AF open end, 2 BA, 4 BA open end
Screwdriver, small

### To remove

1. Lift and prop bonnet.
2. Remove the air cleaner. Operation A3-2.
3. Where a Zenith carburetter is fitted, disconnect the items indicated on Fig. A3-23.

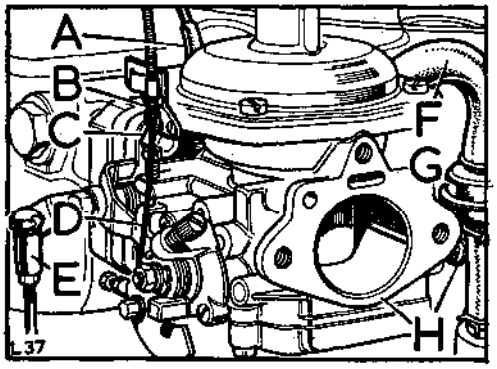


**Fig. A3-23. View of Zenith carburetter**

A—Vacuum pipe
B—Cold start outer cable and fixing
C—Fixings, carburetter to cylinder head
D—Cold start inner cable
E—Throttle linkage ball joint
F—Breather filter hose
G—Breather filter, withdraw hose at carburetter
H—Fuel inlet pipe

4. Where an SU carburetter is fitted, disconnect the items indicated on Fig. A3-24.
5. Remove the fixings and withdraw the carburetter.

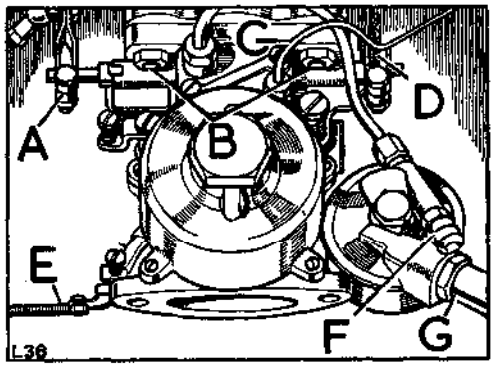


**Fig. A3-24. View of SU carburetter**

A—Throttle linkage
B—Fixings, carburetter to engine
C—Vacuum pipe
D—Throttle return spring
E—Cold start cable
F—Economiser hose
G—Fuel inlet pipe

### To refit

1. Ensure that the carburetter and cylinder head-joint faces are clean.
2. Refit the carburetter, referring to Fig. A3-23 or Fig. A3-24 as appropriate.
3. Adjust the cold start control as described in Section L.
4. If necessary, adjust and tune the carburetter as described in Section L.

*Operations marked with an asterisk (*) can be carried out with the engine installed in the vehicle*

## *Oil pressure warning light switch, remove and refit—Operation A3-7

Workshop hand tools:
Spanner size: $\frac{1}{2}$ in. AF

### Oil pressure switch, remove and refit

1. The oil pressure switch is screwed into the oil supply pipe from the cylinder block to the cylinder head.

   Its function is to cause the oil warning light to operate if the oil pressure drops below 8 to 10 lb/sq in. (0,6 to 0,7 kg/cm²).

2. Lift and prop bonnet.

3. The switch can be removed from the union by disconnecting the electrical connection and using a $\frac{1}{2}$ in. AF spanner to unscrew the complete unit.

4. If a faulty switch is suspected, it can be checked by substitution or by temporarily fitting a pressure gauge in its place.

5. When replacing the switch, fit a new sealing washer.

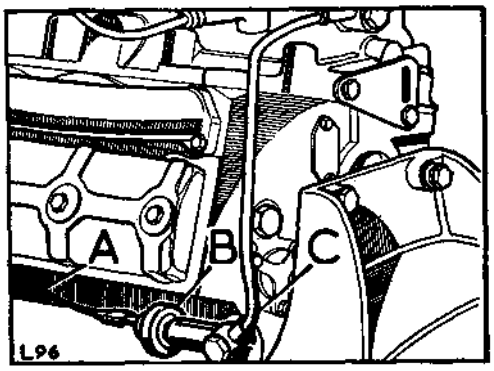


**Fig. A3-25. Rocker oil feed pipe and oil pressure switch**

A—Electrical lead
B—Oil pressure switch
C—Rocker oil feed pipe

## *Exhaust manifold, remove and refit—Operation A3-8

Workshop hand tools:
Spanner sizes: $\frac{1}{2}$ In., $\frac{9}{16}$ in. AF open end

### To remove

1. Lift and prop bonnet.
2. Remove the exhaust heat shield, if fitted.
3. Remove the fixings and withdraw the manifold from the engine.

### To refit

1. Refit the exhaust manifold and joint washers, and the heat shield if fitted.
2. Tighten the fixings evenly to avoid distortion.
3. Close the bonnet panel.

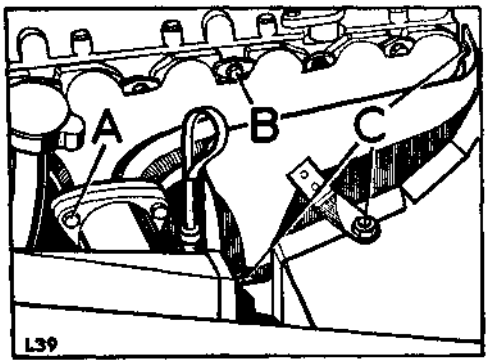


**Fig. A3-26. Exhaust manifold fixings**

A—Front exhaust pipe fixings
B—Manifold fixings
C—Heat shield fixings

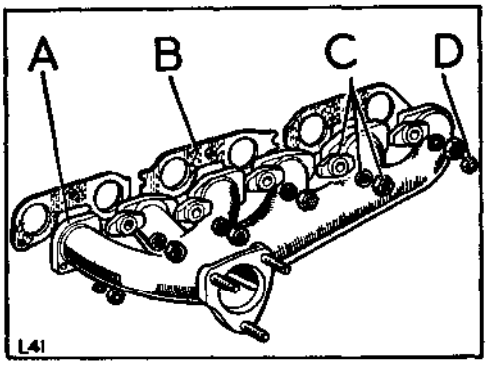


**Fig. A3-27. Exhaust manifold arrangement**

A—Exhaust manifold
B—Joint washers
C—Upper fixings
D—Lower fixings

*Operations marked with an asterisk (*) can be carried out with the engine installed in the vehicle*

## *Starter motor, to remove and refit—Operation A3-9

*(For starter motor overhaul procedures, Section N refers)*

Workshop hand tools:
Spanner sizes: $\frac{7}{16}$ in. AF, $\frac{1}{2}$ in. Whit

**Starter, remove**

1. Remove the bonnet panel. Operation A3-1.
2. Disconnect the battery leads.
3. Disconnect wiring from starter to solenoid.
4. Remove starter motor, secured by two fixings.
   **Note:** It may be necessary to remove heat shield to facilitate starter removal.

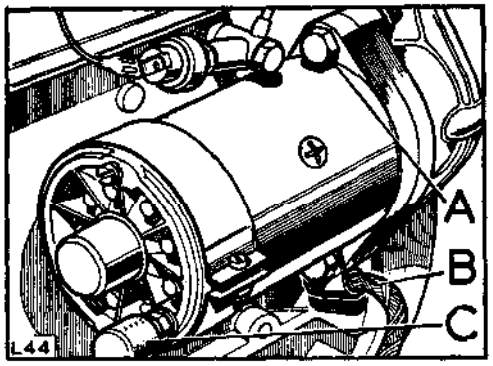


**Fig. A3-28. Starter motor fixings**

A—Starter fixings
B—Earth strap
C—Electrical lead cover

**Starter, refit**

1. Reverse removal procedure and connect wiring.
2. Check operation of starter motor.
3. Refit bonnet panel. Operation A3-1.

## *Dynamo or alternator, to remove and refit—Operation A3-10

*(For overhaul procedures, Section N refers)*

Workshop hand tools:
Spanner sizes: $\frac{1}{2}$ in. AF, $\frac{5}{16}$ in. AF, $\frac{1}{4}$ in. BSF

### DYNAMO

#### To remove

1. Lift and prop bonnet panel.
2. Disconnect the dynamo wiring and slacken the dynamo fixings.
3. Push the dynamo towards the engine and disengage the driving belt from the dynamo pulley.
4. Remove all fixings and withdraw dynamo..

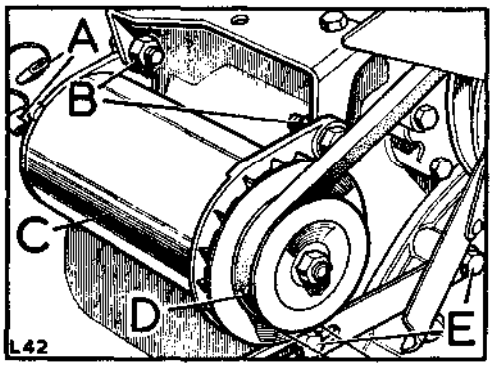


**Fig. A3-29. Dynamo and fixings**

A—Electrical lead terminals
B—Fixings at mounting bracket
C—Dynamo
D—Fan belt
E—Fixings at adjusting bracket

#### To refit

1. Offer the dynamo to mounting bracket and align the bolt holes. Secure with bolts and self-locking nuts.
2. Check the alignment of the dynamo and vibration damper pulleys, correct if necessary by adjusting the dynamo top mounting bracket on the engine. Failure to align pulleys will cause premature belt wear.
3. Pivot the dynamo inwards and fit driving belt.
4. Fit the lower securing bolt to the dynamo adjusting link. Do not tighten.
5. Adjust the belt to the correct tension. Fan belt tension: $\frac{5}{16}$ in. to $\frac{7}{16}$ in. (8,0 mm to 11,0 mm). Check by thumb pressure between the pulleys.
6. Connect wiring in accordance with the appropriate circuit diagram, Section N, and reconnect the battery leads.
7. Close the bonnet.

### ALTERNATOR

#### Remove and refit

The procedure is similar to that for dynamo remove and refit, reference being made to Fig. A3-30.

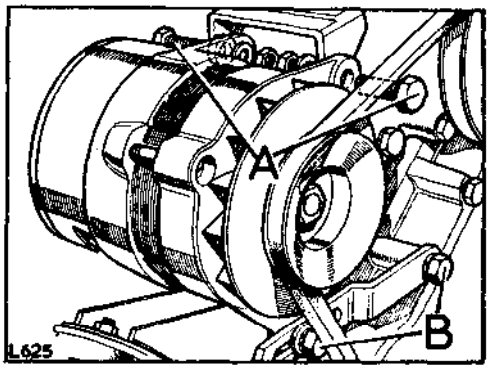


**Fig. A3-30. Alternator and fixings**

A—Mounting bracket fixings
B—Adjusting link fixings

*Operations marked with an asterisk (*) can be carried out with the engine installed in the vehicle*

## *Water pump, remove and refit—Operation A3-11

*(For overhaul information, Section K refers)*

Workshop hand tools:
Spanner sizes: $\frac{7}{16}$ in. AF open end, $\frac{1}{2}$ in. AF ring
Screwdriver (medium), Pliers

### To remove

1. Remove bonnet panel. Operation A3-1.
2. Remove radiator filler cap and drain coolant.

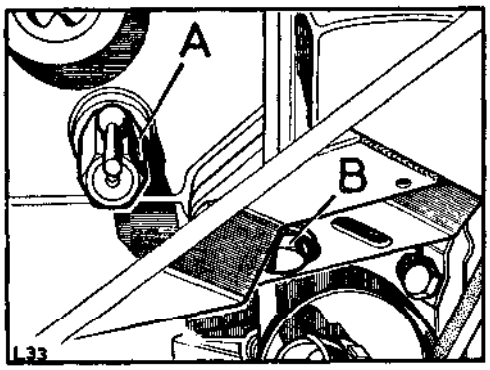


**A3-31. Coolant drain taps location**

A—Cylinder block drain
B—Radiator drain

3. Remove the shroud from the radiator fan cowl.

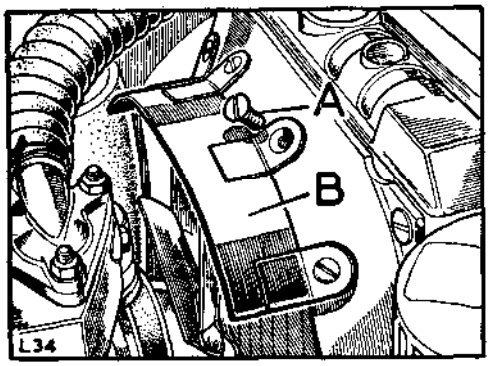


**Fig. A3-32. Fan cowl shroud fixings**

A—Fixings at fan cowl
B—Shroud

4. Slacken dynamo fixings and remove fan belt.

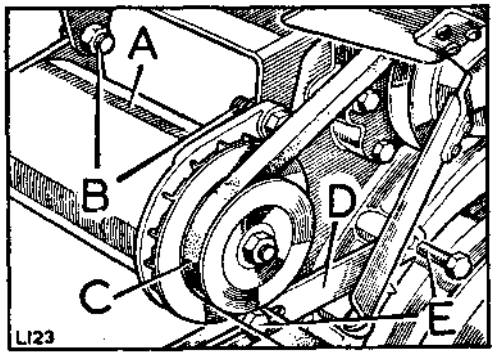


**Fig. A3-33. Dynamo fixings**

A—Dynamo
B—Fixings
C—Fan belt
D—Adjusting link
E—Adjusting link fixings

5. Remove fan blades, packing piece and fan pulley.

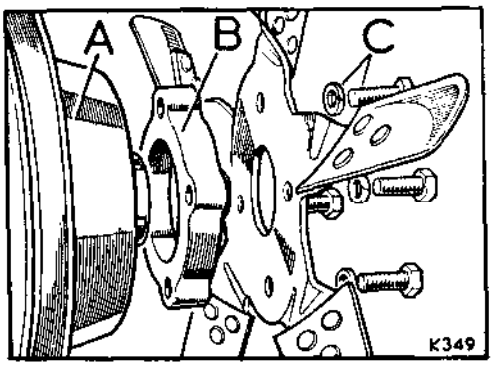


**Fig. A3-34. Fixings for fan and pulley**

A—Fan pulley, withdraw with fan blades
B—Distance piece
C—Fan blades fixings

*Operations marked with an asterisk (*) can be carried out with the engine installed in the vehicle*

## Operation A3-11—*continued*

6. Detach the radiator bottom hose and the heater hose if fitted.

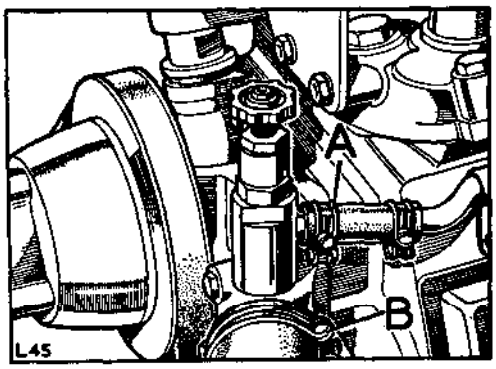


**Fig. A3-35. Water pump hose fixings**

A—At heater hose
B—At radiator bottom hose

7. Remove fixings and withdraw water pump, tilting the pump upwards off the locating dowels. This will compress the 'O' ring at the pump by-pass outlet and allow the pump to be withdrawn. Remove the joint washer.

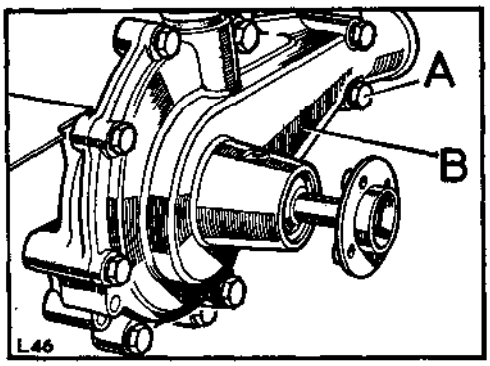


**Fig. A3-36. Location of water pump fixings**

A—Fixings B—Water pump

**To refit**

1. Ensure that the fitting faces of water pump and cylinder block are clean.
2. Lightly grease a new joint washer and position it on the cylinder block.
3. Lightly smear a new 'O' ring with Silicone Compound MS4 and position it on pump by-pass outlet.

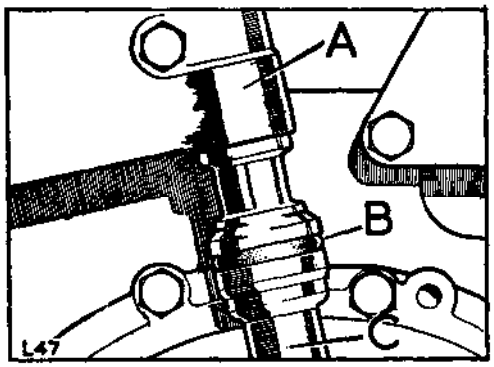


**Fig. A3-37. Seal between cylinder head and water pump**

A—Cylinder head, thermostat housing
B—Rubber 'O' ring
C—Water pump

4. Then fit water pump to cylinder block by tilting it on to the dowels, ensuring that the 'O' ring is not dislodged. Secure pump with the fixings, referring to Fig. A3-36 for location details.

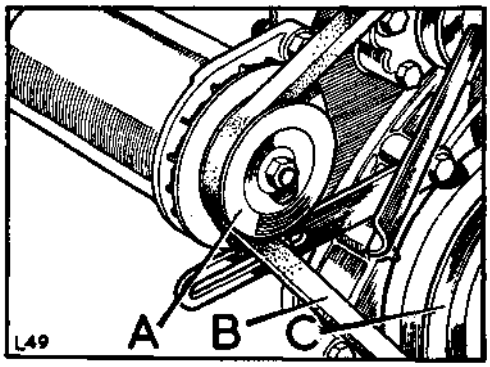


**Fig. A3-38. Checking fan belt tension**

A—Dynamo pulley
B—Thumb pressure applied midway between the pulleys
C—Crankshaft pulley

## Operation A3-11—*continued*

5. Fit the water outlet and heater hoses to the pump.
6. Refit the packing piece, fan pulley, fan blades and fan belt.
7. Adjust the fan belt to the correct tension. Fan belt tension: $\frac{5}{16}$ in. to $\frac{7}{16}$ in. (8 mm to 11 mm). Check by thumb pressure between the pulleys.
8. Refill the engine coolant system and replace the radiator cap.

**Coolant System**
**Bonneted Control Model, 2.6 Litre Petrol**

| Imperial Pint | U.S. Pint | Litre | Antifreeze | Frost Precaution |
|---|---|---|---|---|
| 20 | 24 | 11,2 | 33⅓% | — 32°C (— 25°F) |

9. Refit the bonnet panel. Operation A3-1.

## *Thermostat, to renew—Operation A3-12

*(For overhaul details, Section K refers)*

Workshop hand tools:
Spanner size: $\frac{7}{16}$ in. AF
Screwdriver, medium

### To remove

1. Lift and prop bonnet.
2. Drain off coolant at radiator.

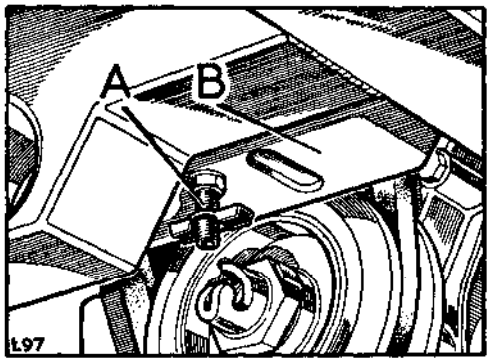


**Fig. A3-39. Radiator drain point**

A—Drain point B—Radiator

3. Remove outlet pipe from the cylinder head
4. Lift out the thermostat and joint washers.

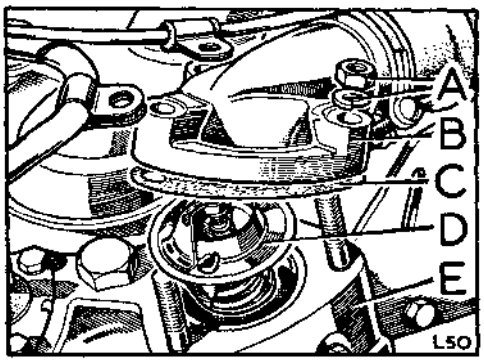


**Fig. A3-40. Removing thermostat**

A—Outlet pipe fixings
B—Outlet pipe
C—Joint washer
D—Thermostat
E—Cylinder block

### To refit

1. Fit a new thermostat complete with new joint washers.
2. Reverse removal procedure.
3. Top up the coolant and check for leaks.

**Coolant System**
**Bonneted Control Model, 2.6 Litre Petrol**

| Imperial Pint | U.S. Pint | Litres | Antifreeze | Frost Precaution |
|---|---|---|---|---|
| 20 | 24 | 11.2 | 33⅓% | — 32°C (— 25°F) |

*Operations marked with an asterisk (*) can be carried out with the engine installed in the vehicle*

## *Rocker oil feed pipe, remove and refit—Operation A3-13

Workshop hand tools:
Spanner sizes: $\frac{5}{8}$ in. AF, $\frac{7}{16}$ in. BSF

### To remove

1. Lift and prop bonnet panel.
2. Disconnect wiring from oil pressure switch.
3. Remove banjo bolt fixing oil pipe to cylinder block, and remove heat shield if required.
4. Remove banjo bolt fixing oil pipe to cylinder head.
5. If required, remove oil pressure switch.

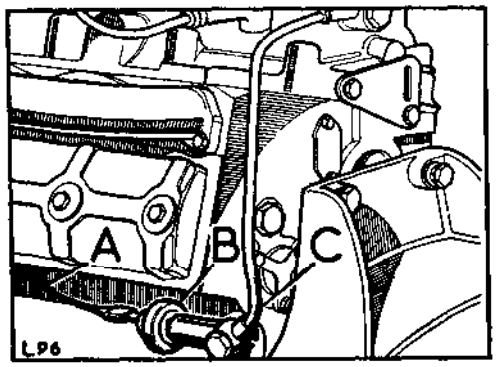


**Fig. A3-41. Oil pressure switch and rocker oil feed pipe**

A—Electrical lead
B—Oil pressure switch
C—Rocker oil feed pipe

### Oil pipe, refit

1. Renew joint washers as required and ensure that a meter plug is fitted to the top banjo union.
2. Reverse removal procedure.

*Operations marked with an asterisk (*) can be carried out with the engine installed in the vehicle*

## *Engine breather box and filter, remove and refit—Operation A3-14

Workshop hand tools:
Spanner sizes: $\frac{7}{16}$ in., $\frac{1}{2}$ in. AF open end
Screwdriver, medium; Pliers

1. Remove the bonnet panel. Operation A3-1.
2. Remove the air cleaner, Operation A3-2, to obtain access.
3. Withdraw the filter hose from the carburetter.
4. Remove the fixings and withdraw the breather box from the engine. Discard the joint washer.

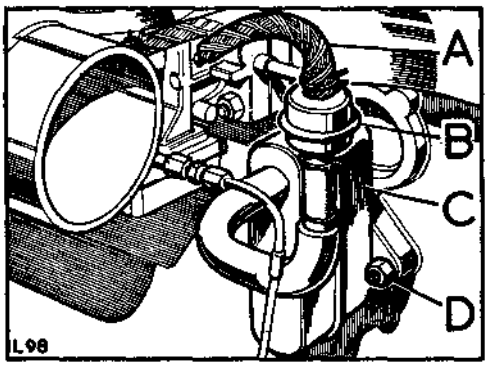


**Fig. A3-42. Breather box and filter layout**

A—Filter hose
B—Engine breather filter
C—Breather box
D—Breather box fixings

5. Withdraw the hoses from the breather box and filter.

### Inspection

1. Wash the filter and breather box in clean fuel to remove all deposits.
2. Examine the components and hoses for damage and general condition. Allow the components to dry before refitting.

### To refit

1. Smear general purpose grease on both sides of the new joint washer.
2. Fit the breather box and joint washer to the engine.
3. Fit the hoses to the filter.
4. Fit the hose free ends to the breather box and carburetter.

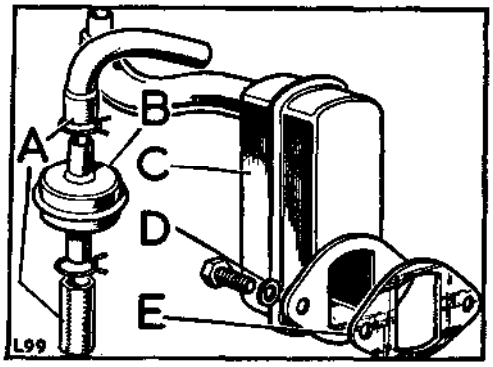


**Fig. A3-43. Filter arrangement**

A—Hoses
B—Filter
C—Breather box
D—Fixings for box
E—Joint washer

5. Refit the air cleaner. Operation A3-2.
6. Replace the bonnet panel. Operation A3-1.

*Operations marked with an asterisk (*) can be carried out with the engine installed in the vehicle*

## *Oil filter, external, replace element—Operation A3-15

Workshop hand tools:
Spanner sizes: $\frac{5}{8}$ in. AF socket

**Procedure**

1. Position a suitable waste oil receptacle under the filter.
2. Remove the centre fixing from the filter.
3. Remove filter bowl and allow oil to drain.
4. Remove sealing ring from filter cap.
5. Wash the components using clean fuel.
6. Replace filter element and sealing ring.

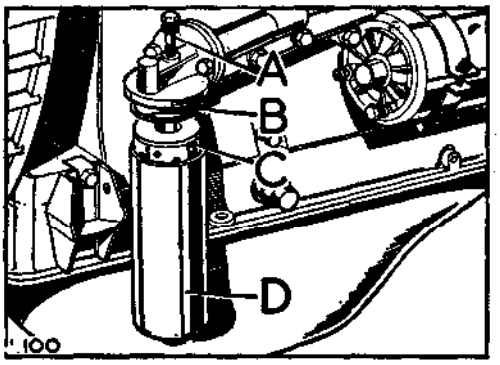


**Fig. A3-44. View of oil filter**

A—Filter centre fixing
B—Sealing ring
C—Element
D—Filter body

7. Fit the new element to the filter body and refit body to cap. Ensure filter body is fully home on to sealing ring in filter cap.
8. Replenish the engine lubricating oil.
9. Check the sump oil level after a short engine run and top-up as necessary.

**Engine lubricant capacity**
**Bonneted Control model, 2.6 Litre Petrol**

| | Imperial Pint | U.S. Pint | Litres |
|---|---|---|---|
| Engine .. .. | 12 | 14.4 | 6,25 |
| Filter .. .. | 1 | 1.2 | 0,5 |
| Total | 13 | 15.6 | 6,75 |

## *Oil filter, external, remove, overhaul and refit—Operation A3-16

Workshop hand tools:
Spanner sizes: $\frac{5}{8}$ in. AF, $1\frac{1}{8}$ in. AF socket, $\frac{5}{16}$ in. BSF open end

### To remove

1. Lift and prop bonnet.
2. Detach oil pressure switch lead.
3. Remove the fixings and withdraw the oil filter and joint washer.

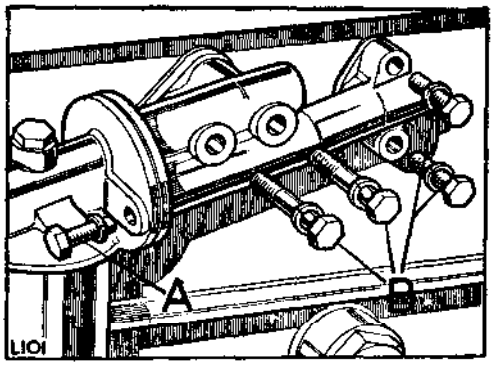


**Fig. A3-45. Oil filter fixings**
A—Fixings, adaptor to block
B—Fixings, filter to adaptor

### To overhaul

1. Drain off oil.
2. Remove the centre fixing and dismantle the filter assembly.

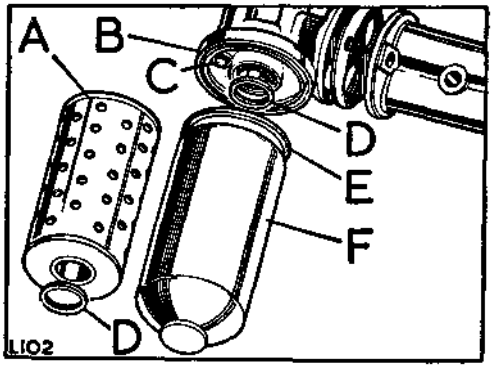


**Fig. A3-46. Exploded view of oil filter**
A—Element
B—Top cover
C—Pressure relief valve ball
D—Sealing washers for element
E—Sealing washer, large
F—Container

3. Wash the components in clean fuel and inspect for general condition.
4. Replace the sealing washer and filter element.
5. Reverse the dismantling procedure.

### To refit

1. Assemble the element and seals to the filter body.
2. Refit filter body to top cover, ensuring that the body seats correctly on to the sealing ring.
3. Refit the assembled filter to the engine. Fig. A3-45 refers.
4. Replenish the engine lubricating oil and top-up as necessary after a short engine run.
5. Close the bonnet panel.

**Engine lubricant capacity**
**Bonneted Control Model, 2.6 Litre Petrol**

| | Imperial Pint | U.S. Pint | Litre |
|---|---|---|---|
| Engine .. .. | 12 | 14.4 | 6,25 |
| Filter .. .. | 1 | 1.2 | 0,5 |
| Total | 13 | 15.6 | 6,75 |

*Operations marked with an asterisk (*) can be carried out with the engine installed in the vehicle*

## *Ignition timing procedure—Operation A3-17

Workshop hand tools:
$\frac{7}{16}$ in. AF open end, $\frac{1}{4}$ in. Whit open end
Screwdriver (medium), Pliers

Special tools:
12 volt test lamp and leads

The following information concerns engines with 7.0:1 and 7.8:1 compression ratios for which the ignition settings differ. The engine compression ratio is indicated by the commencing three digits of the engine number stamped on the upper LH side of the engine block adjacent to the manifold front fixings. as follows:

| Compression ratio | Engine numbers commence with |
|---|---|
| 7.0 : 1 | 346 |
| 7.8 : 1 | 345 |

The required ignition settings for the different engines are given in the 'Procedure' section which follows:

In addition, the timing marks location varies as follows:

Early engines: timing marks appear on flywheel.

Later engines: timing marks appear on crankshaft pulley.

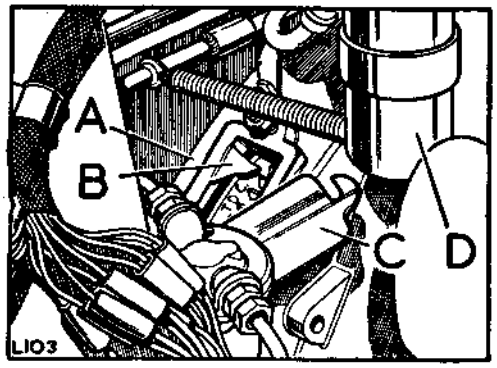


**Fig. A3-47. Location of timing pointer, early engines**

A—Flywheel housing
B—Timing pointer
C—Timing aperture cover
D—Ignition coil (reference only)

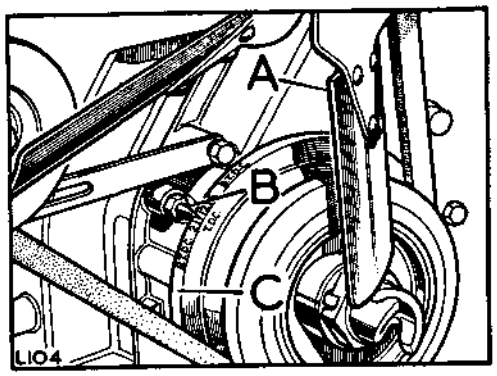


**Fig. A3-48. Location of timing pointer, later engines**

A—Fan
B—Timing pointer at front cover
C—Crankshaft pulley

### Procedure

1. Remove bonnet panel. Operation A3-1.
2. Remove the distributor cap then rotate the engine in direction of rotation until the appropriate timing mark is aligned with the pointer and the distributor rotor is at No. 1 cylinder firing position.

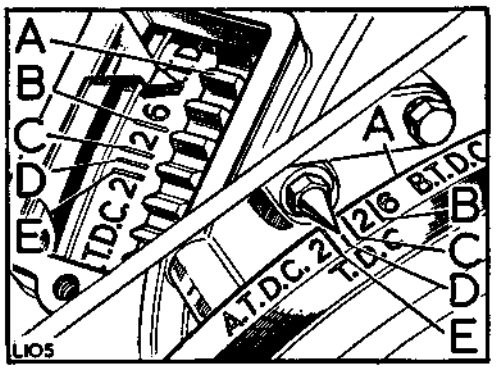


**Fig. A3-49. Timing marks and fuel octane applications**

A—Crankshaft pulley or flywheel, as applicable
B—6° BTDC mark for special market engines only (8.8:1 compression ratio and using 95 octane fuel)
C—2° BTDC mark for use on 7.0:1 engines using 83 octane fuel
D—TDC mark for use on 7.0:1 engines using 80 octane fuel
E—2° ATDC mark for use on 7.0:1 engines using 78 octane fuel and also on 7.8:1 engines using 90 octane fuel.

*Operations marked with an asterisk (*) can be carried out with the engine installed in the vehicle*

## Operation A3-17—*continued*

**Note:** If the use of lower octane fuels on 7.8:1 engines is unavoidable, the ignition setting may be retarded as required to a maximum of 6° ATDC. For example, for fuel of octane number 85 (which is the lowest operable octane number for the engine) the 6° ATDC setting may be used and is established by using the existing markings as a guide.

3. Slacken the pinch bolt in base of distributor body and rotate the distributor in opposite direction to arrow on rotor arm until the contact breaker points are just opening with the cam follower on the leading side of the cam. Re-tighten the pinch bolt.

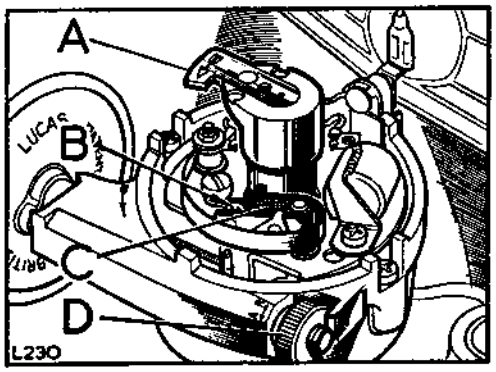


**Fig. A3-50. View of distributor**

A—Rotor arm
B—Contact breaker points
C—Cam follower
D—Vernier screw adjuster

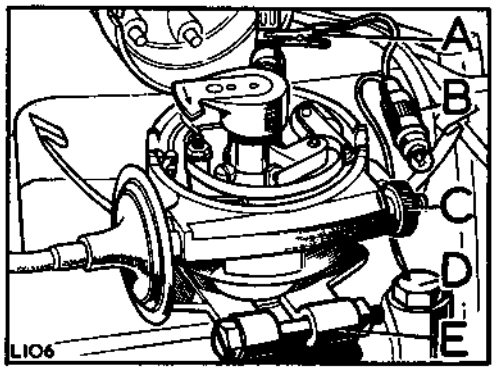


**Fig. A3-51. Test lamp in position**

A—LT terminal at distributor
B—Test lamp
C—Vernier screw adjuster
D—Suitable earth
E—Pinch bolt

4. Connect one lead of a 12 volt test lamp to the distributor LT terminal and the other one to a good earth on engine. Switch ignition 'on' and turn the crankshaft two revolutions in direction of rotation. The bulb should light as the timing pointer comes into alignment with the appropriate mark. See paragraph 2.
5. Adjust as required by slackening the pinch bolt and turning the distributor bodily, or for fine adjustment, by means of the vernier screw.
6. When satisfactory, remove the test lamp and leads and refit the distributor cap.
7. Refit the inspection cover to the flywheel housing, where applicable.
8. Refit the bonnet panel. Operation A3-1.

## *Distributor and HT leads, remove and refit—Operation A3-18

*(For overhaul procedures, Section N refers)*

Workshop hand tools:
Spanner sizes: $\frac{7}{16}$ in. AF, open end, $\frac{5}{16}$ in. AF open end

### To remove

1. Lift and prop bonnet panel.
2. Disconnect vacuum pipe at distributor.
3. Remove leads at sparking plugs.
4. Disconnect the low tension and high tension leads.
5. Remove the distributor fixings and withdraw the distributor from the drive shaft housing.
6. If required, lift out the short drive shaft from the housing.

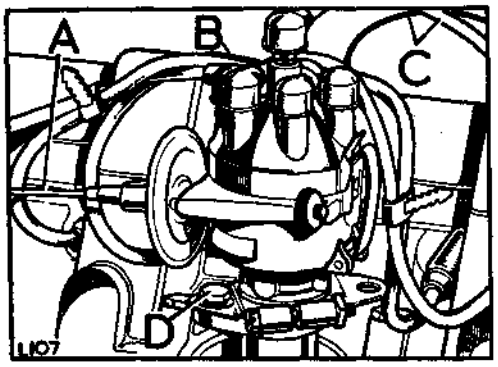


**Fig. A3-52. Distributor location and fixings**

A—Vacuum pipe
B—Sparking plug leads
C—HT and LT leads
D—Distributor fixing

### To refit

1. If removed, refit the short drive shaft into the housing to engage the offset drive in the distributor gear shaft.
2. Where a replacement distributor is to be fitted, check the contact breaker gap and reset if necessary to .014 in. to .016 in. (0,35 mm to 0,40 mm). Set the octane selector, using the knurled adjuster so that the fourth line of the calibrated slide is against the distributor body casing.
3. Turn the distributor drive shaft to align with the offset drive in the short drive shaft.
4. Refit the distributor to the engine.
5. Check and if necessary reset the ignition timing as described in Operation A3-17.
6. Close the bonnet.

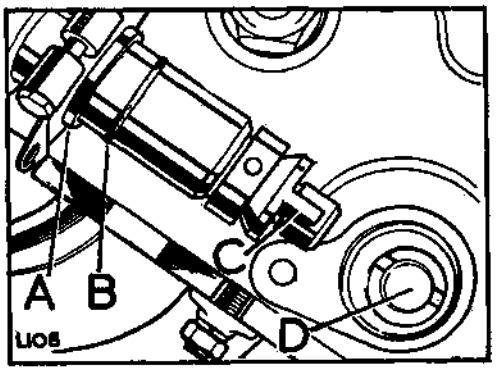


**Fig. A3-53. Distributor refitting**

A—Cork seal
B—'O' ring seal
C—Offset drive to align with engine drive
D—Offset drive at engine

*Operations marked with an asterisk (*) can be carried out with the engine installed in the vehicle*

## *Tappet adjustment—Operation A3-19

Workshop hand tools:
Spanner size: ½ in. AF open end
Screwdriver (medium), Feeler gauges

1. Lift and prop bonnet.
2. Remove the air cleaner. Operation A3-2.
3. Remove the side and top rocker covers.
4. Turn the crank in the direction of rotation until number six inlet valve (counting from the front of the engine ) is fully open, that is, with the valve spring fully compressed. In this position the tappet for number one inlet valve is on the dwell of the cam.
5. Slacken the tappet locknut, then rotate the adjusting screw until there is .006 in. (0,15 mm) clearance between rocker and valve stem when checked with a feeler gauge. Ensure all clearance is taken up at the push rod ends. Tighten locknut and recheck clearance.

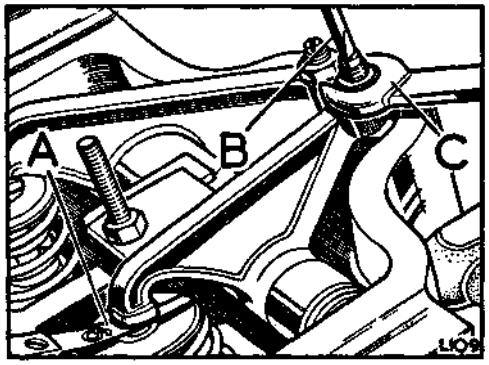


**Fig. A3-54. Adjusting tappets, inlet valves**

A—Feeler gauge
B—Screwdriver
C—Tappet spanner

6. Set the remaining inlet tappets referring to the sequence table which appears in the next column.
7. Adjust the exhaust valves in a similar manner using a .010 in. (0,25 mm) feeler gauge.

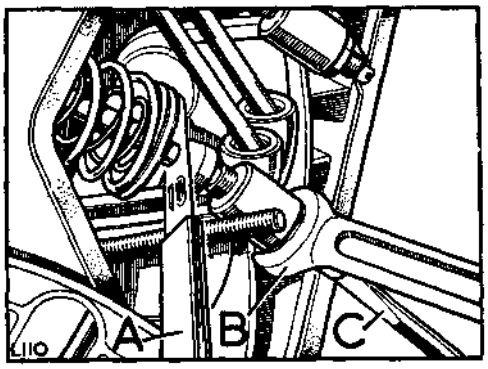


**Fig. A3-55. Adjusting tappets, exhaust valves**

A—Feeler gauge
B—Tappet spanner
C—Screwdriver

Tappet clearance:
Inlet valves .006 in. (0,15 mm).
Exhaust valves .010 in. (0,25 mm).
Set No. 1 tappet with No. 6 valve fully open
Set No. 2 tappet with No. 5 valve fully open
Set No. 3 tappet with No. 4 valve fully open
Set No. 4 tappet with No. 3 valve fully open
Set No. 5 tappet with No. 2 valve fully open
Set No. 6 tappet with No. 1 valve fully open

8. Check and if necessary reset the inlet valve tappet clearances with the engine at normal running temperature.
9. Close the bonnet.

## *Top rockers and shafts, remove and refit—Operation A3-20

Workshop hand tools:
½ in. AF, ¾ in. AF open end, 1 13/16 in. AF
Feeler gauges. Screwdriver (medium)

Special tools:
Part No. 262749, special tool for extracting rocker shafts

1. Remove the bonnet panel. Operation A3-1.
2. Remove the radiator and grille panel. Operation A3-3.
3. Remove the distributor cap, and sparking plug leads. Release the HT lead from the ignition coil and place the distributor cap and lead assembly aside.
4. Remove the engine breather filter from the top rocker cover.
5. Remove the three sleeve nuts and sealing washers securing the top rocker cover, lift off the cover and gasket.

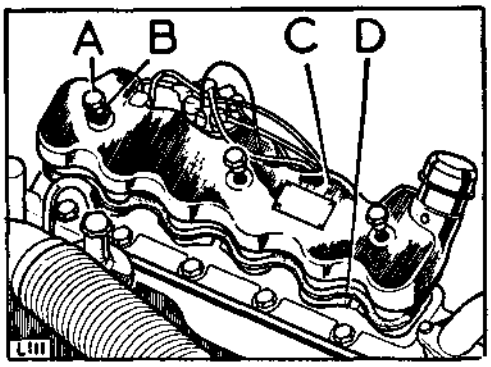


**Fig. A3-56. Top rocker cover**
A—Sleeve nut
B—Sealing washer
C—Rocker cover
D—Gasket

6. Slacken the tappet adjusting screws right back.
7. Remove the rocker shaft end plug and sealing washer from the front of the cylinder head.
8. Remove the three nuts, shakeproof washers and retaining plates securing the rocker spacers.
9. Remove the three locating screws securing front and rear rocker shafts.
10. Extract the front and rear rocker shafts, using special tool, Part No. 262749 and lift out the rocker levers, springs and spacers from the cylinder head as they are released.

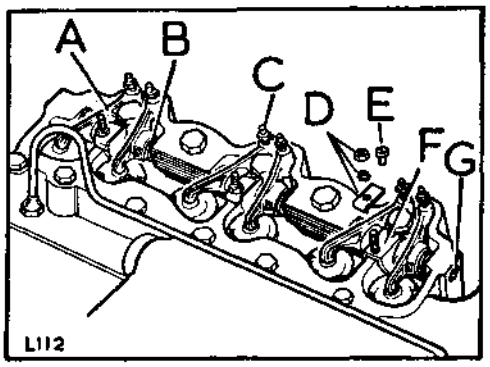


**Fig. A3-57. Top rocker assembly**
A—Rocker levers
B—Rocker springs (6 off)
C—Tappet adjusting screws
D—Spacer block fixings
E—Shaft locating screws (3 off)
F—Spacer blocks (3 off)
G—Tapping for end plug

### Top rocker shafts and rockers, to fit

Rocker bushes must be a press fit in the rockers, and rotate freely on the shafts when fitted; the bushes must be pressed in .010 to .020 in. (0,25 to 0,50 mm) below the thrust face of the rocker. After fitting the bushes drill the two oil holes through each bush; ream in position to .50 in.+.001 (12,5 mm+0,025).

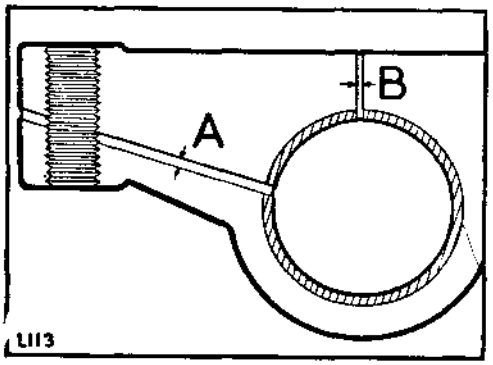


**Fig. A3-58. Drilling rocker shaft bush**
A—Oil hole 7/64 in. (2,8 mm) diameter
B—Oil hole 1/16 in. (1,6 mm) diameter

*Operations marked with an asterisk (*) can be carried out with the engine installed in the vehicle*

## Operation A3-20—*continued*

Refit the rockers and shafts by reversing the removal procedure. Fig. A3-59 refers.

The rocker shafts must be replaced with the oil holes facing away from the inlet valves. A suitable mark made on the shaft end relating to the oil holes position will facilitate correct alignment.

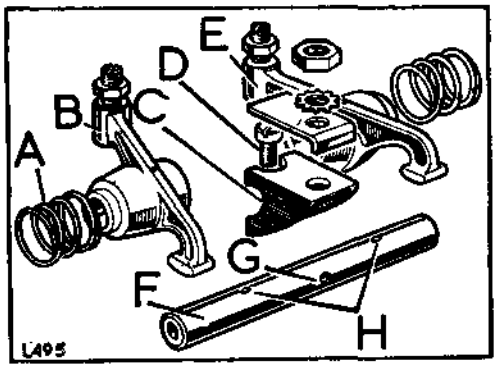


**Fig. A3-59. Arrangement of top rocker assembly showing front shaft**

A—Spring
B—Rocker arm (left-handed) and tappet screw
C—Spacer block
D—Locating screw
E—Rocker arm (right-handed)
F—Rocker shaft. Front (shorter) shaft shown; rear (longer) shaft arrangement is similar, but is fitted with tapped hole toward front
G—Tapped hole for locating screw
H—Plain holes, to be positioned away from valves when shaft is fitted

## *Cylinder head, remove and refit—Operation A3-21

*(For cylinder head overhaul details, Operation A3-22 refers)*

Workshop hand tools:
Spanner sizes: $\frac{7}{16}$ in., $\frac{1}{2}$ in., $\frac{9}{16}$ in., $\frac{5}{8}$ in., $\frac{3}{4}$ in., $\frac{7}{8}$ in. AF sockets
Screwdriver (medium), Pliers

Special tools:
Torque wrench

### To remove

1. Remove the bonnet panel. Operation A3-1.
2. Remove the air cleaner. Operation A3-2.
3. Drain the coolant from the radiator and engine block.

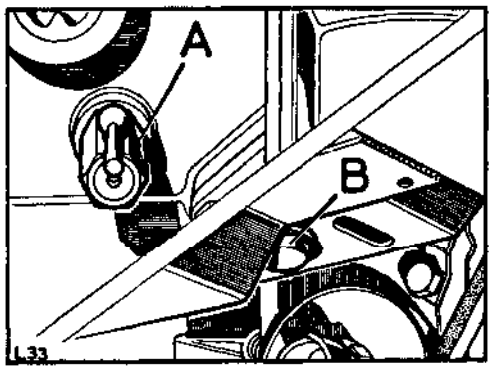


**Fig. A3-60. Coolant drain taps location**

A—At engine block, RH side
B—At radiator

4. Remove the carburetter. Operation A3-6.
5. Disconnect the control rods, bell-crank to cross-shaft.

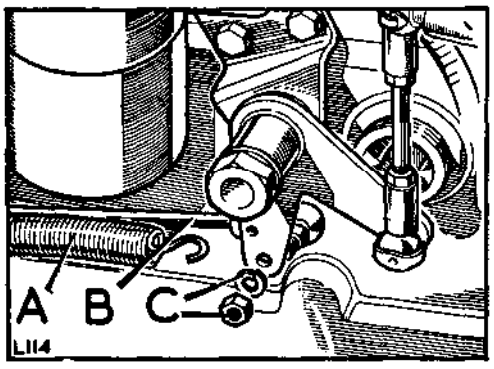


**Fig. A3-61. Throttle linkage**

A—Return spring
B—Control rod, cross shaft to bell crank
C—Fixings

6. Remove the distributor. Operation A3-18.
7. Disconnect the rocker feed oil pipe at rear of cylinder head.

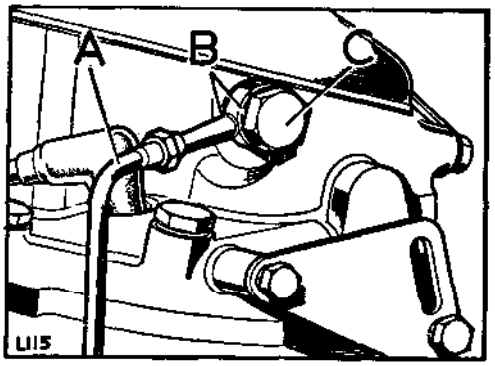


**Fig. A3-62. Rocker oil feed upper fixings**

A—Oil feed pipe
B—Joint washer
C—Banjo bolt and meter plug

8. Disconnect the mixture control warning light and coolant temperature transmitter leads at the cylinder head, RH side.

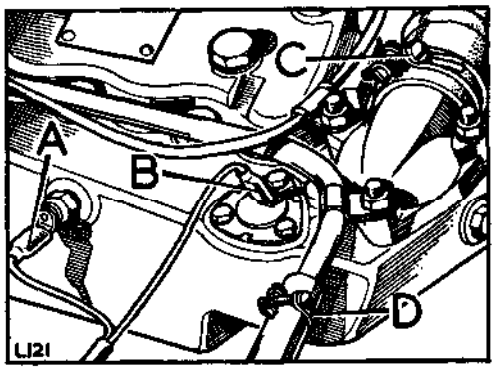


**Fig. A3-63. Cylinder head, RH side**

A—Mixture control warning light lead
B—Coolant temperature transmitter lead
C—Radiator top hose
D—Servo brake pipe

*Operations marked with an asterisk (*) can be carried out with the engine installed in the vehicle*

## Operation A3-21—*continued*

9. Disconnect the servo brake pipe.
10. Disconnect the radiator top hose. Where fitted, release the clip on the short by-pass hose between cylinder head and water pump.
11. Remove the top rocker cover and slack off the tappets.

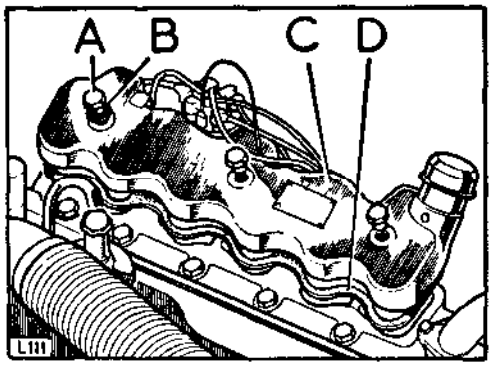


**Fig. A3-64. Top rocker cover**

A—Sleeve nut
B—Sealing washer
C—Rocker cover
D—Joint gasket

12. Slacken the cylinder head fixings evenly and remove them. Fig. A3-67 refers.

    Lift off the cylinder head and discard the head gasket and the 'O' ring seal from between the cylinder head and water pump.
13. Withdraw the push rods and retain in sequence related to the tappet served.

### To refit

1. Remove side rocker cover. If necessary, remove the engine oil level dipstick and tube to allow rocker cover withdrawal.
2. Replace the push rods in their original positions.
3. Smear a new cylinder head gasket with oil and place on the face of the cylinder block, with the side marked 'this side up' uppermost.
4. Use two old cylinder head bolts with their heads sawn off to locate the gasket and head. Cut a screwdriver slot across the diameter of the bolts to facilitate removal when the cylinder head is in position.

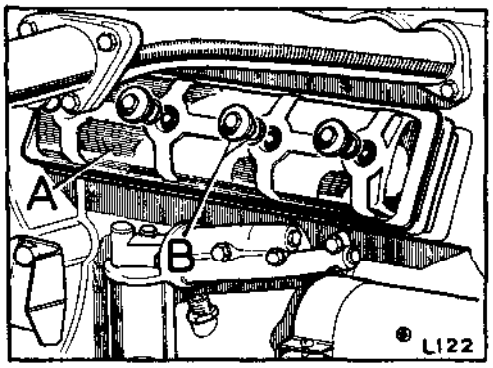


**Fig. A3-65. Side rocker cover**

A—Side cover B—Fixings

5. Position the cylinder head on to the block; as this is being done connect the by-pass hose or sealing washer to the cylinder head.
6. Check that the push rods are seating correctly.

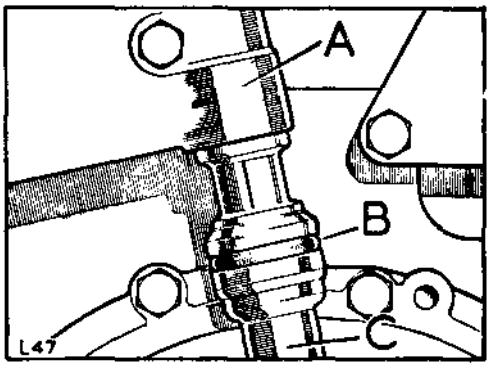


**Fig. A3-66. Seal between head and pump**

A—Cylinder head, thermostat housing
B—Rubber 'O' ring
C—Water pump

## Operation A3-21—*continued*

7. Tighten the cylinder head bolts in order shown and to the following torques:
   (a) Bolts 'A' .. .. 50 lb ft (7 mkg)
   (b) Bolts 'B' .. .. 30 lb ft (4 mkg)

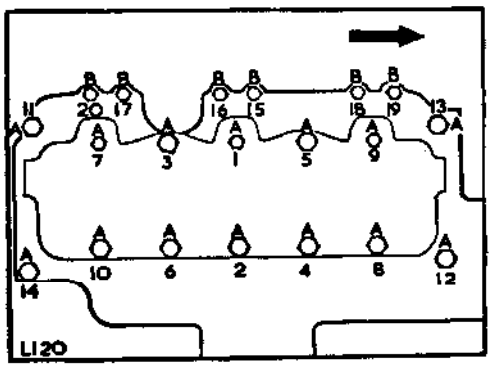


**Fig. A3-67. Order of tightening cylinder head bolts**

8. Adjust the tappets. Operation A3-19.
9. Refit the side rocker cover and top rocker cover.
10. Refit the coolant hose, electrical leads and servo pipe. Fig. A3-63 refers.
11. Replenish the coolant system.
12. Refit the distributor. Operation A3-18.
13. Refit the carburetter. Operation A3-6.
14. Reconnect the throttle linkage, Fig. A3-61 refers
15. Refit the air cleaner. Operation A3-2.
16. Refit the bonnet panel. Operation A3-1.
17. With the engine hot after the initial engine run, recheck the cylinder head fixings torque loadings and reset as necessary.
18. Check and reset tappet clearances as necessary. Operation A3-19.

**Coolant system capacity**
**Bonneted Control Model, 2.6 Litre Petrol**

| Imperial Pints | U.S. Pints | Litres | Anti-freeze | Frost Precaution |
|---|---|---|---|---|
| 20 | 24 | 11.2 | 33⅓% | — 32°C (— 25°F) |

## *Engine, to decarbonise and top overhaul—Operation A3-22

Workshop hand tools:
Spanner sizes: $\frac{7}{16}$ in. AF, $\frac{1}{2}$ in. AF, $\frac{5}{8}$ in. AF, 2 BA
Sparking plug spanner
Screwdrivers (medium and large)
Pliers

Special tools:
Torque wrench, Feeler gauges
Extractor (Part No. 262749) for rocker shaft
Valve spring compressor (Part No. 276102)
Valve guide removal drift (Part No. 274401)
Valve guide refitting drift (Part No. 600959)
Protection plate, insert removal (Part No. 263050)
Valve seat insert tool (Part No. 530625)

**A decarbonising gasket set is available**

1. Remove the bonnet panel. Operation A3-1.
2. Remove the air cleaner. Operation A3-2.
3. Drain the coolant from the radiator and engine block.
4. Remove the carburetter. Operation A3-6.

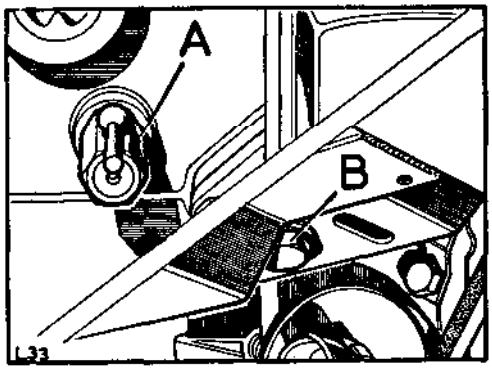


**Fig. A3-68. Coolant drain taps location**

A—At engine block, RH side
B—At radiator

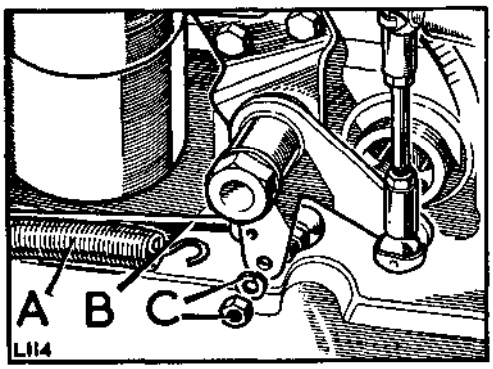


**Fig. A3-69. Throttle linkage**

A—Return spring
B—Control rod, cross shaft to bell crank
C—Fixings

5. Disconnect the control rod, bell crank to cross-shaft.
6. Remove the distributor. Operation A3-18.
7. Remove the sparking plugs.
8. Remove the cylinder head. Operation A3-21.
9. Remove the water outlet pipe and withdraw the thermostat.

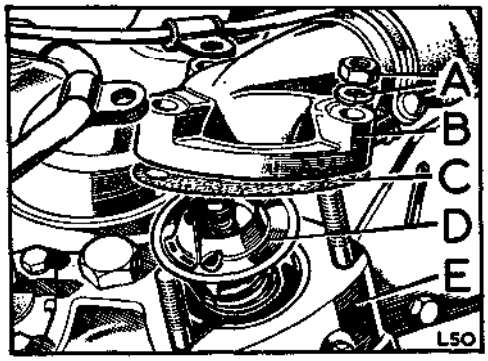


**Fig. A3-70. Removing thermostat**

A—Outlet pipe fixings
B—Outlet pipe
C—Joint washer
D—Thermostat
E—Cylinder block

10. Remove the rocker shaft assembly complete from the cylinder head.
11. Mark the inlet valves to ensure they are refitted in their original positions.
12. Compress the valve springs, using valve spring compressor Part No. 276102). Remove split cones and withdraw valves. Remove compressor and lift off valves. Retain the springs in pairs, they are selected to ensure an interference fit.
13. Carefully remove the combustion deposits from the cylinder head and valve ports and the piston crowns.

*Operations marked with an asterisk (*) can be carried out with the engine installed in the vehicle*

## Operation A3-22—*continued*

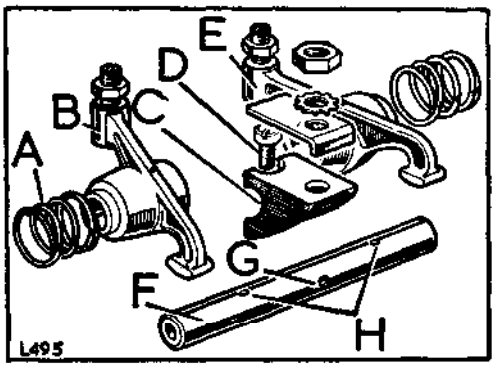


**Fig. A3-71. Arrangement of top rocker assembly showing front shaft**

A—Spring
B—Rocker arm (left-handed) and tappet screw
C—Spacer block
D—Locating screw
E—Rocker arm (right-handed)
F—Rocker shaft. Front (shorter) shaft shown; rear (longer) shaft arrangement is similar, but is fitted with tapped hole toward front
G—Tapped hole for locating screw
H—Plain holes, to be positioned away from valves when shaft is fitted

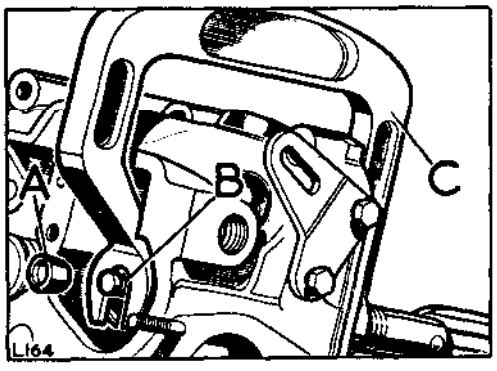


**Fig. A3-72. Compressing the inlet valve springs**

A—Split cones
B—Waisted recess for cones
C—Special tool. Part No. 276102

14. If necessary, remove the inlet valve seat insert by carefully grinding the seat insert away; when thin enough, the insert can be prised out.
15. If necessary, remove the inlet valve guides, first removing the oil seals, using drift (Part No. 274401).

### Cylinder head, assemble

1. Where it is necessary to fit new inlet valve seat inserts to the cylinder head, heat the head evenly for a few minutes to approximately 150°F (65°C), the temperature of a normal degreaser, enter the seat squarely into the cylinder head recess, which must be thoroughly clean, and press into position.
2. Valve guides, to refit: replace the steel shim washer on the new valve guides.

   Lubricate the inlet valve guides and carefully drift them into position, using drift (Part No. 600959). Offer the valves to the guides and ensure they are a satisfactory fit with running clearance but no excessive side-float.
3. Use the valve guide as a pilot and cut the valve seat to 30°.

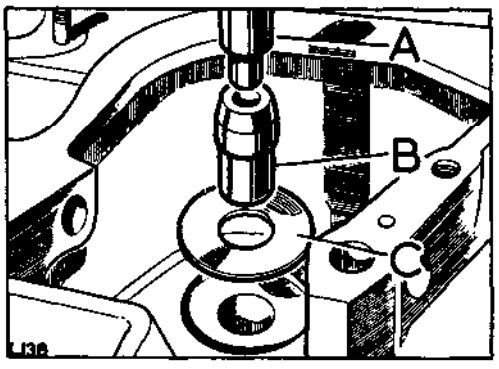


**Fig. A3-73. Fitting inlet valve guide**

A—Assembly drift
B—Inlet valve guide
C—Support washer

## Operation A3-22—*continued*

4. Face the inlet valves to 30° and lap each valve into its respective seat. The valve end face must be flat when visually checked using a straight edge.
5. Wash each valve seat, port and guide with clean paraffin.
6. It is important that new rubber 'O' rings are fitted to each inlet valve guide after all the lapping and preparatory work has been finished. This will ensure that once fitted the valve is not withdrawn through the bore of the seal, thus destroying the seal.
7. Lightly oil the valve stem and locate each inlet valve into its respective seat. Using the compressing tool (Part No. 276102), fit the spring assemblies, caps and split cones.
8. Replace the complete top rocker shaft assembly and fixings. Fig. A3-71 refers.
9. The cylinder head is now ready for reassembly and should be placed to one side until the cylinder block and exhaust valves have received attention.

### Exhaust valves, overhaul

1. Remove the exhaust manifold and withdraw the gaskets.
2. Remove the side rocker cover and joint washer
3. Mark the exhaust valves for refitting in correct sequence.
4. Slacken the tappet adjusting screws right off and set each rocker back on its cam.
5. Compress the valve springs, using valve spring compressor (Part No. 276102). Remove split cones and withdraw valves. Remove compressor and lift out valves. Retain the springs in pairs; they are selected to ensure an interference fit.
6. Remove the combustion deposits from the valves and ports.

**Note:** If valve seat inserts or valve guides are to be removed, first remove the side rockers and shafts, Operation A3-26, to obtain access.

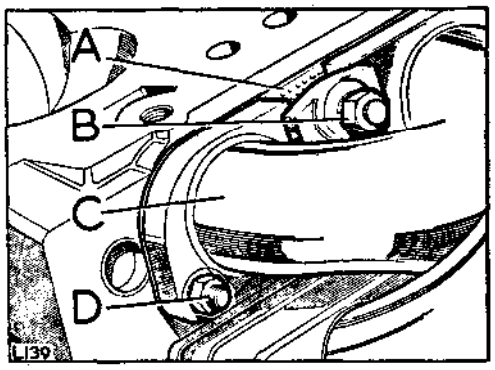


**Fig. A3-74. Exhaust manifold fixings**

A—Gaskets (3 off)
B—Top fixings (5 off)
C—Manifold
D—Lower fixings (2 off)

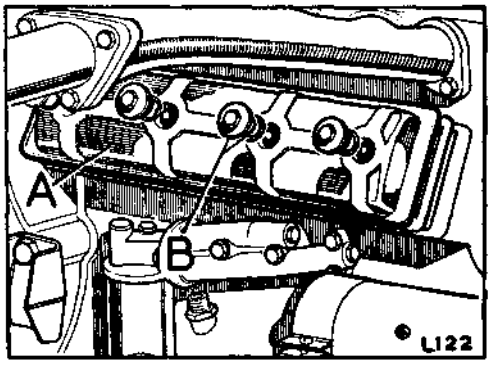


**Fig. A3-75. Side rocker cover**

A—Rocker cover B—Fixings

## Operation A3-22—*continued*

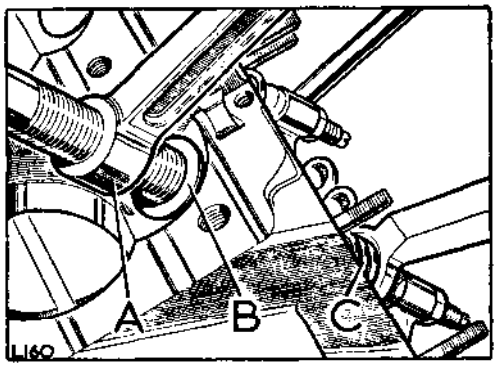


**Fig. A3-76. Compressing exhaust valve springs**

A—Special tool, Part No. 276102
B—Valve head
C—Valve spring

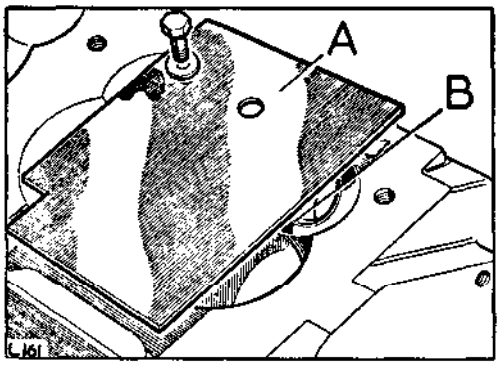


**Fig. A3-77. Special protection plate**

A—Protection plate, Part No. 263050
B—Exhaust valve seat insert

7. If necessary, remove the valve seat inserts. Owing to the extreme hardness of the seat inserts, great care must be taken during the removal operation to prevent possible injury from flying fragments. A cutting stone should be used, in order to reduce the insert to a minimum thickness, before attempting to break the seat with a chisel. When grinding, take care to avoid damage to the cylinder block.
8. After grinding the seat inserts, secure a protection plate (Part No. 263050) over the cylinder block face and break the seat insert with a suitable chisel applied through the hole in the plate.
9. If necessary, the exhaust valve guides can be drifted out, using a drift (Part No. 274401), as illustrated.

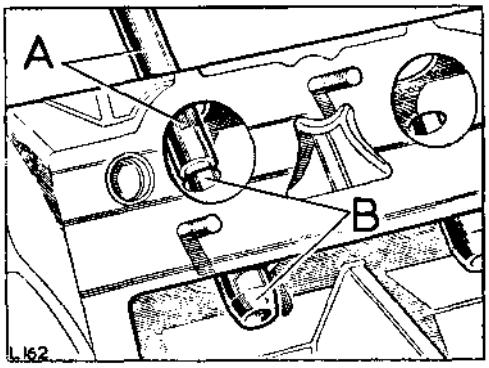


**Fig. A3-78. Removing exhaust valve guide with drift**

A—Drift B—Valve guide

**Exhaust valves, seats and guides, refit**

1. If new exhaust seat inserts are to be fitted, clean the seat recess and pull the new insert into position, using a special tool (Part No. 530625). It is not necessary to heat the block or freeze the insert, but light taps on the tool may be required to ensure that the insert enters smoothly. Continue precautions against fragmentation by fitting the protection plate (Part No. 263050) and leaving it in position for a few minutes, as the insert may shatter.
2. Lubricate the exhaust valve guides and carefully drift them into position, using drift (Part No. 600959).

## Operation A3-22—*continued*

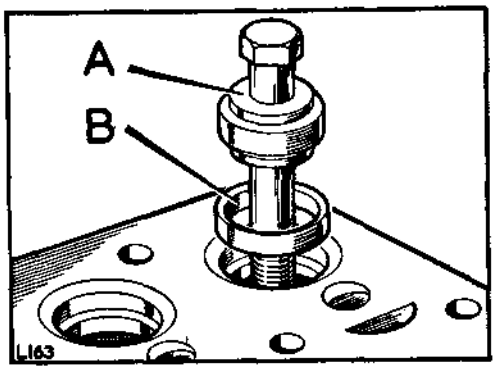


**Fig. A3-79. Fitting exhaust valve seat**

A—Insert tool, Part No. 530625
B—Valve seat

3. Use the valve guide as a pilot and cut the valve seat to 46°.
4. Face the exhaust valves to 45° and lap each valve into its respective seat, using suitable equipment.
5. Wash each valve, seat, port and guide with clean paraffin.
6. Lightly oil valve stem and locate the valves into their respective guides. Using the compressor tool (Part No. 276102), fit the spring assemblies, caps and split cones.

### To assemble

1. Refit the side rockers and shafts, Operation A3-26, if previously removed.
2. Fit the cylinder head. Operation A3-21.
3. Adjust the tappets. Operation A3-19.
4. Fit the exhaust manifold, Fig. A3-74 refers.
5. Fit the distributor. Operation A3-18.
6. Fit the carburetter. Operation A3-6.
7. Reconnect the throttle linkage, Fig. A3-69 refers.
8. Refit the sparking plugs.
9. Refit the air cleaner. Operation A3-2.
10. Replenish the coolant system.

**Coolant system capacity**
**Bonneted Control Model, 2.6 Litre Petrol**

| Imperial Pints | U.S. Pints | Litres | Antifreeze | Frost Precaution |
|---|---|---|---|---|
| 20 | 24 | 11,2 | 33⅓% | — 32°C (— 25°F) |

## *Engine front cover and oil seal, remove and refit—Operation A3-23

Workshop hand tools:
Spanner sizes: $\frac{7}{16}$ in. x $\frac{1}{2}$ in. AF open (2 off)
$\frac{1}{2}$ in. AF socket, 2 BA open end
Screwdriver (medium), Pliers

Special Tools:
Part No. 530102, starter dog spanner

### To remove

1. Remove the bonnet panel. Operation A3-1.
2. Remove the air cleaner. Operation A3-2.
3. Remove the radiator and grille panel. Operation A3-3.
4. Slacken the dynamo and adjusting link fixings and remove the fan belt. Remove the adjusting link to gain access to the front cover fixings.
5. Remove fan blades, distance piece and fan pulley.
6. Remove the starting dog, using special tool, Part No. 530102, and withdraw the key located pulley from the crankshaft.

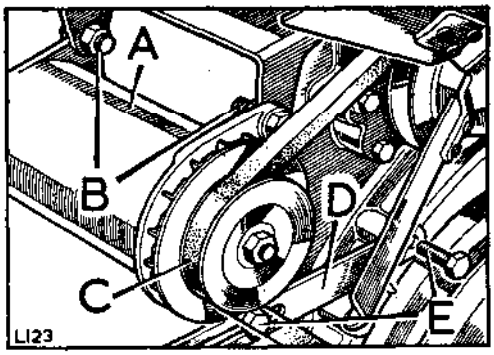


**Fig. A3-80. Dynamo adjusting link fixings**

A—Dynamo
B—Dynamo fixings
C—Fan belt
D—Adjusting link
E—Fixings

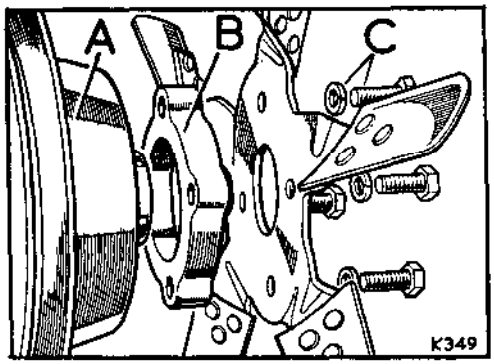


**Fig. A3-81. Fan blades fixings**

A—Fan pulley
B—Distance piece
C—Fan fixings

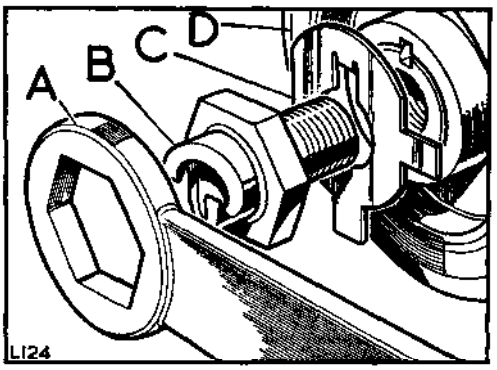


**Fig. A3-82. Starter dog and pulley fixings**

A—Special tool, Part No. 530102
B—Starter dog
C—Starter dog lock plate
D—Crankshaft pulley

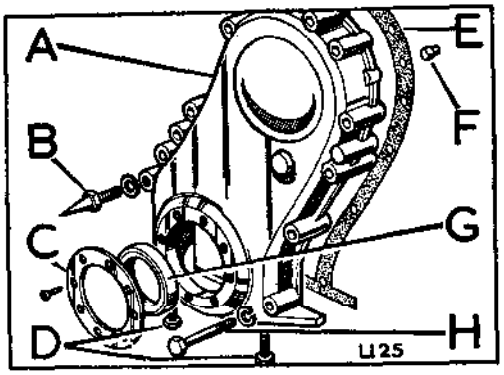


**Fig. A3-83. Front cover fixings**

A—Front cover
B—Timing pointer
C—Mud excluder, fixed by drive screws
D—Fixings at sump
E—Joint washer
F—Locating dowel
G—Oil seal
H—Fixings at front of engine

*Operations marked with an asterisk (*) can be carried out with the engine installed in the vehicle*

## Operation A3-23—*continued*

7. Remove the fixings and withdraw the front cover and joint washer from the engine.
8. If required remove the oil thrower retained by the crankshaft key.

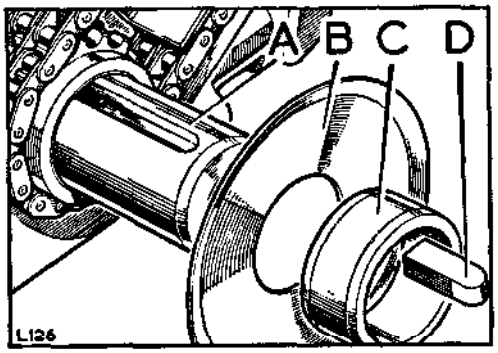


**Fig. A3-84. Oil thrower details**

A—Crankshaft
B—Oil thrower
C—Oil seal ring
D—Key on crankshaft

### Oil seal

If a replacement oil seal is required, proceed as follows:

1. Carefully lever the oil seal metal casing away from the housing bore sufficient to collapse the seal and allow its removal. Use a screwdriver or suitable metal strip as a lever.
2. Apply a thin coating of suitable jointing compound such as Hylomar SQ 32M, to the new oil seal metal surfaces.

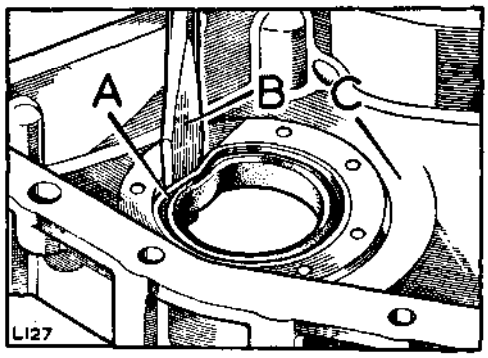


**Fig. A3-85. Oil seal removal**

A—Oil seal, shown collapsed
B—Suitable lever
C—Front cover

3. Locate the oil seal squarely in the housing bore with garter spring toward operator and press fully in.

### To refit

1. If previously removed, fit the oil thrower (concave face toward the front) and oil sealring to the crankshaft and refit the crankshaft key, Fig. A3-84 refers.
2. Smear general purpose grease on to both sides of the joint washer and position on the engine front cover joint face.
3. Fit the front cover and secure, Fig. A3-83 refers for fixings.
4. Fit the crankshaft pulley, key located, and starter dog. The correct torque loading for the starter dog is 200 lb ft (27,5 mkg). Secure with a new lockplate. Fig. A3-82 refers.
5. Fit the fan blades, pulley and distance piece.
6. Fit the dynamo adjusting link, fit the fan belt and set the fan belt tension. The tension is correct when there is $\frac{5}{16}$ in. to $\frac{7}{16}$ in. (8 mm to 11 mm) free movement, measured as illustrated. Tighten the dynamo fixings and recheck the tension.

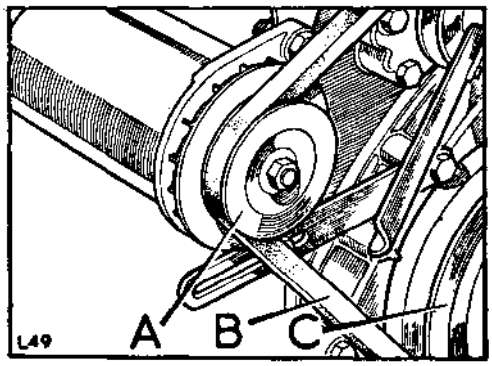


**Fig. A3-86. Checking fan belt tension**

A—Dynamo pulley
B—Thumb pressure applied midway between the pulleys
C—Crankshaft pulley

7. Refit the radiator and grille panel, Operation A3-3, positioning the fan blades to avoid damage to the radiator block.
8. Refit the air cleaner. Operation A3-2.
9. Refit the bonnet panel. Operation A3-1.

## *Timing chain tensioner, remove and refit—Operation A3-24

Workshop hand tools:
Spanner sizes: $\frac{7}{16}$ in. AF, $\frac{1}{4}$ in. AF open end
$\frac{1}{8}$ in. (3 mm) Allen key

### To remove

1. Remove the bonnet panel. Operation A3-1.
2. Remove the air cleaner. Operation A3-2.
3. Remove the radiator grille panel. Operation A3-3.
4. Remove the engine front cover. Operation A3-23.

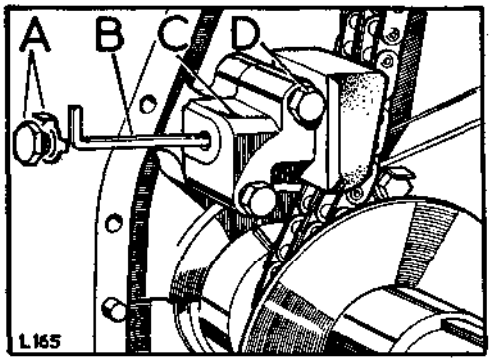


**Fig. A3-87. Tensioner and adjuster fixings**

A—Retainer plug and tab washer
B—Allen key
C—Chain tensioner
D—Fixings for retaining tensioner to engine

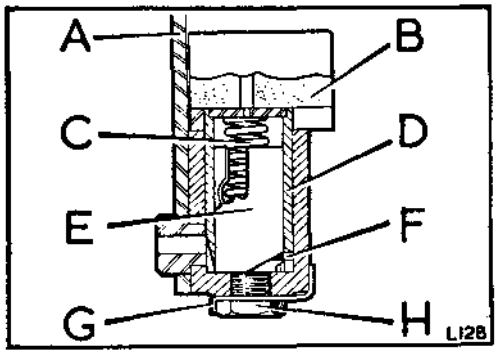


**Fig. A3-88. Cross-section view of tensioner arrangement**

A—Mounting plate
B—Tensioner pad
C—Tension spring
D—Plunger
E—Adjuster cylinder
F—Limiter peg
G—Tabwasher
H—Plug

5. Remove the tensioner adjuster plug. Using a $\frac{1}{8}$ in. (3 mm) Allen key, turn the adjuster clockwise until the adjuster retracts into the body, thus relieving the spring loading on the tensioner.
6. Remove the fixings and withdraw the tensioner assembly from the engine.
7. If required, dismantle the assembly by withdrawing the tensioner body from the pad assembly, then turn the adjuster anti-clockwise and allow it to withdraw under spring pressure.
8. Check parts for wear and replace as necessary.

### To refit

1. If previously dismantled, assemble the spring and adjuster to the tensioner pad bore and turn in fully until retained by the peg in the bore.

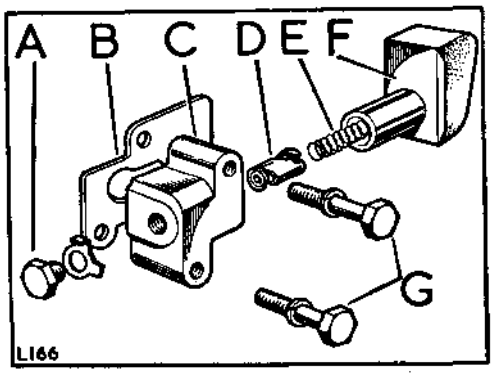


**Fig. A3-89. Tensioner arrangement**

A—Plug for adjuster tapping
B—Mounting plate
C—Tensioner body
D—Adjuster
E—Spring
F—Tensioner pad
G—Body fixings

2. Fit the tensioner body to the assembled pad, spring and adjuster.
3. Position the mounting plate on the assembly and offer the assembly to the engine, locating on the dowel.
4. Secure with the fixings, Fig. A3-89 refers.

*Operations marked with an asterisk (*) can be carried out with the engine installed in the vehicle*

## Operation A3-24—*continued*

5. Turn the Allen key in a clockwise direction until the rubber head of the tensioner moves forward under spring pressure against the timing chain. Do not attempt to force the rubber head on to the chain by external pressure and do not turn the Allen key anti-clockwise.
6. Fit the plug and lock tab to the base of the tensioner.
7. Refit the engine front cover. Operation A3-23
8. Refit the radiator and grille panel. Operation A3-3.
9. Refit the air cleaner. Operation A3-2.
10. Refit the bonnet panel A3-1.

## *Timing gears and chain, remove and refit—Operation A3-25

*(This operation includes valve timing procedure)*

Workshop hand tools:
Spanner sizes: $\frac{7}{16}$ in. x $\frac{1}{2}$ in. AF (2 off)
$\frac{1}{2}$ in. AF, $\frac{5}{8}$ in. AF socket
2 BA open end
Screwdriver (medium), Pliers

Special tools:
Part No. 507231, Chainwheel extractor
Dial test indicator and bracket

### To remove

1. Remove the bonnet panel. Operation A3-1.
2. Remove the air cleaner. Operation A3-2.
3. Remove the radiator and grille panel. Operation A3-3.
4. Remove the engine front cover. Operation A3-23.
5. Remove the timing chain tensioner. Operation A3-24.
6. Remove the chainwheels, using special extractor Part No. 507231 to withdraw the camshaft chainwheel, and lift off the timing chain.

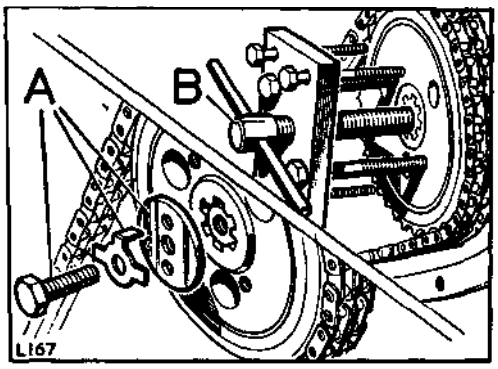


**Fig. A3-90. Removing camshaft chainwheel**
A—Chainwheel fixings B—Extractor

7. Inspect the components for damage and general condition.

**Note:** There are two types of camshaft chain wheel in use, a two piece unit consisting of a hub and wheel secured together by three bolts and lock plates, and a later type chainwheel manufactured in one piece used in conjunction with a modified crankshaft chainwheel. Where required, the later type chainwheels may be fitted to early engines (providing they are fitted as a pair) and the valve timing procedure simplified as described in the relevant part of the following 'Procedure'.

### Valve timing procedure

In addition to the differing chainwheels in use, the valve timing procedure is also affected by the location of the timing marks on the engine. On early engines, the exhaust peak (EP) mark is located on the flywheel, on later engines it is located on the crankshaft pulley.

**To refit and set valve timing—engines with timing pointer on flywheel housing and two piece camshaft chainwheel.**

1. Remove engine side rocker cover.

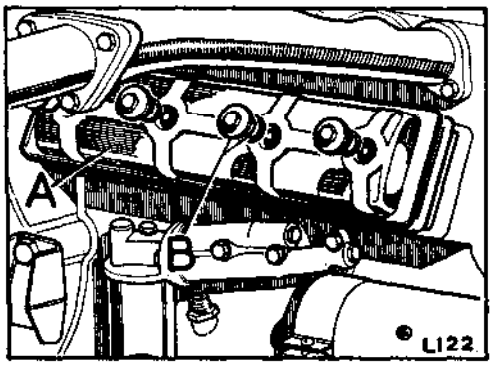


**Fig. A3-91. Engine side rocker cover fixings**
A—Side cover B—Fixings

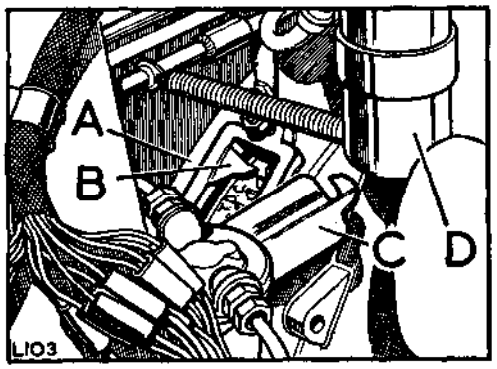


**Fig. A3-92. Timing pointer location, early engines**
A—Flywheel housing
B—Timing pointer
C—Cover plate
D—Ignition coil (reference only)

*Operations marked with an asterisk (*) can be carried out with the engine installed in the vehicle*

## Operation A3-25—*continued*

2. Remove the inspection cover plate from the flywheel housing.
3. Fit the crankshaft chainwheel, key located.
4. Turn the crankshaft in direction of rotation until the EP mark on flywheel is in line with timing pointer.

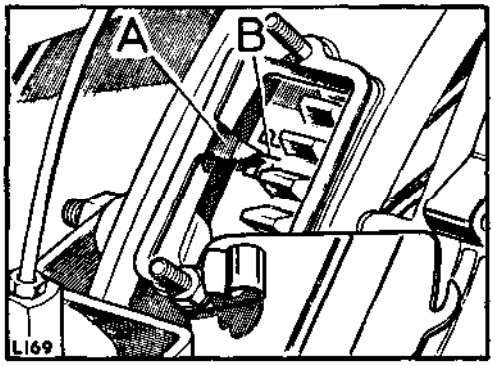


**Fig. A3-93. Timing marks**

A—Pointer at flywheel housing
B—EP mark on flywheel

5. Fit the camshaft chainwheel and hub assembly on to the camshaft splines. Do not lock the fixings at this stage.

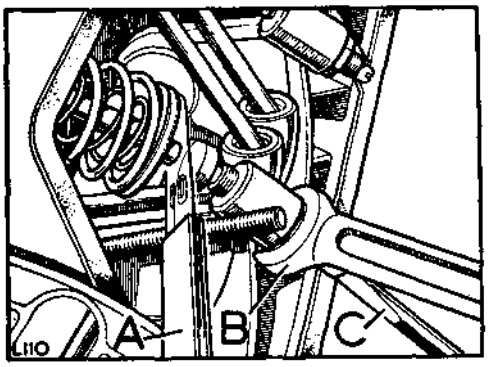


**Fig. A3-94. Adjusting tappets**

A—Feeler gauge
B—Tappet spanner
C—Screwdriver

6. Rotate the camshaft until No. 1 cylinder exhaust valve is fully closed and set the tappet clearance to .010 in. (0,25 mm).
7. Fit a dial test indicator so that the 'fully open' position of the valve can be ascertained.
8. Turn the camshaft in direction of rotation until the rocker pad has nearly opened the valve fully. Stop camshaft rotation and suitably mark the chainwheel and the timing casing relative to each other.
9. Note the reading on the dial test indicator then further turn the camshaft in direction of rotation until the dial test indicator needle has reached the same position as previously noted. Stop rotation of camshaft.

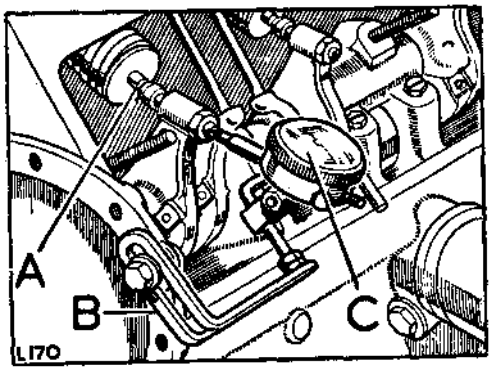


**Fig. A3-95. Dial test indicator in position**

A—No. 1 cylinder exhaust valve
B—Mounting bracket
C—Dial test indicator

10. Suitably mark the chainwheel adjacent to the mark previously made on the timing casing, then make a third mark to bisect the angle between the two previously made marks.
11. Turn the camshaft against the direction of rotation and align the third (middle) mark with the mark on the timing casing.

## Operation A3-25—*continued*

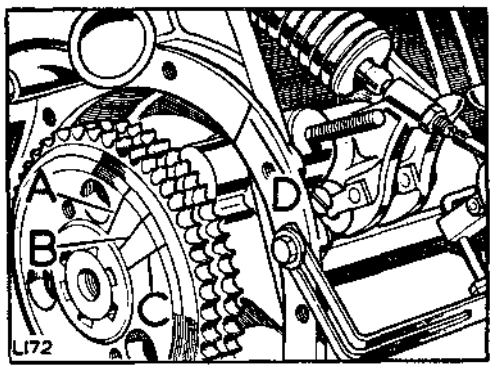


**Fig. A3-96. Chainwheel marking**

A—Second mark on chainwheel
B—Mark between two previously made
C—Mark first made on chainwheel
D—Mark on timing casing

No. 1 exhaust valve is now fully open.

12. Fit the timing chain to the camshaft chainwheel, locate the crankshaft chainwheel on the chain and push the chainwheels home.

    It is of the utmost importance that the driving side of the chain is tight to maintain correct valve timing. In order to achieve this condition, additional fixing holes are provided in the camshaft chainwheel which allow the chainwheel to be fitted in alternative positions, one of which will give the required condition.

    Further adjustment can be obtained by removing the chainwheel from the hub and repositioning the hub on the camshaft splines. If adjustment is necessary, the greatest care must be taken when removing and refitting the chain and chainwheel, to avoid disturbing the crankshaft and the camshaft.

13. When the valve timing and the driving side of the chain are correctly set, lock the camshaft chainwheel fixings.

14. Recheck the valve timing to ensure that it is correct and has not been disturbed during adjustment or assembly.

15. Refit the inspection cover to the flywheel housing.

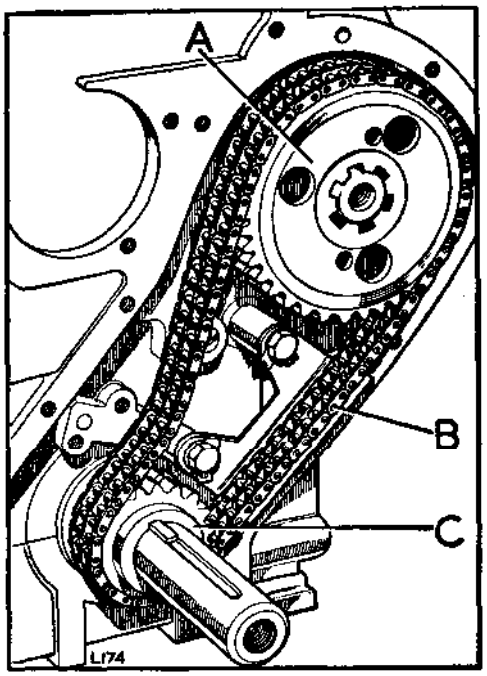


**Fig. A3-97. Fitting the timing chain**

A—Camshaft chainwheel
B—Timing chain—'no slack' at this side
C—Crankshaft chainwheel

16. Refit the remaining components as detailed under 'To rebuild' at the end of this Operation.

**To refit and set valve timing—engines with timing pointer on engine front cover and with the modified chainwheels.**

1. Rotate the crankshaft until the keyway in the crankshaft front end is vertical in relation to the cylinder bore. No. 1 cylinder piston is now at top dead centre, that is, at the position required for valve timing.

2. Fit the camshaft chainwheel, using keyway marked 'P', and rotate the chainwheel until the groove marked 'A' is in line with the centre of the tapped hole as illustrated.

## Operation A3-25—*continued*

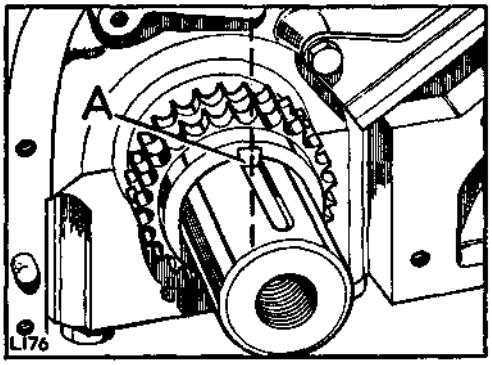


**Fig. A3-98. Crankshaft, front end**

A—Key for chainwheel in vertical position

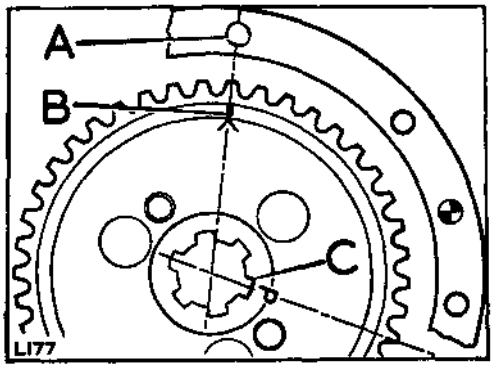


**Fig. A3-99. Camshaft chainwheel in position**

A—Tapped hole in cylinder block front face
B—Groove marked '^' in line with centre of tapped hole
C—Fit chainwheel spline marked 'P' on to camshaft key

3. With the camshaft chainwheel positioned with the groove marked '^' aligned with the tapped hole and with the crankshaft chainwheel keyway positioned vertical, fit the timing chain by carefully removing the chainwheels, fitting the chain then fitting the assembly to the engine. Take care not to disturb the chainwheel relative positions. When fitted, there must be no slack chain on the driving side. Fig. A3-97 refers.
4. With the chainwheels set in the above relationship, the valve timing is now correct. Lock the camshaft chainwheel fixings.

### To rebuild

1. Refit the timing chain tensioner. Operation A3-24.
2. Refit the engine front cover. Operation A3-23.
3. Refit the radiator grille panel. Operation A3-3.
4. Refill the engine coolant system, allowing a full flow through the coolant drain taps before closing them.

**Coolant System**
**Bonneted Control Model, 2.6 litre Model**

| Imperial Pints | U.S. Pints | Litres | Anti-freeze | Frost Precaution |
|---|---|---|---|---|
| 20 | 24 | 11,2 | 33⅓% | — 32°C (— 25°F) |

5. Refit the side rocker cover. Fig. A3-91 refers.
6. Refit the air cleaner. Operation A3-2.
7. Refit the bonnet panel. Operation A3-1.
8. After a short engine run, carry out tappet adjustment (Operation A3-19) if necessary.

## *Side rockers and shafts, to remove and refit—Operation A3-26

Workshop hand tools:
Spanner sizes: $\frac{7}{16}$ in. AF, $\frac{1}{2}$ in. AF, $\frac{9}{16}$ in. AF
$\frac{3}{4}$ in. AF, 2BA Small adjustable
$\frac{1}{8}$ in. Whit
Screwdriver, medium
Pliers, pointed-nose

Special tools:
Extractor (Part No. 262749)
Allen key, $\frac{1}{8}$ in. (3 mm)
Spanner for starter dog (Part No. 530102)
Dial test indicator
Bracket for dial test indicator (Part No. 530106)

### To remove

1. Remove the bonnet panel. Operation A3-1.
2. Remove the radiator and grille panel. Operation A3-3.
3. Remove the exhaust manifold. Operation A3-8.
4. Remove the engine front cover. Operation A3-23.
5. Remove the timing chain tensioner. Operation A3-24.
6. Remove the timing gears and chain. Operation A3-25.
7. Remove the top rocker cover and slacken the tappet adjusting screws right back.

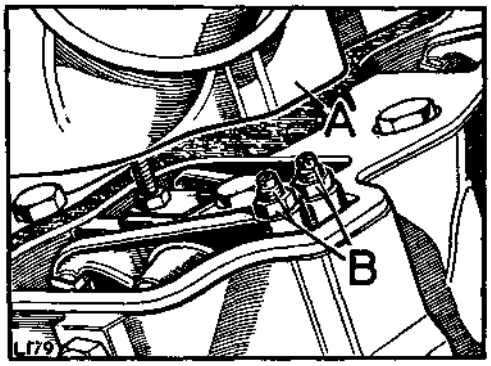


**Fig. A3-100. Top rockers and tappets**

A—Top rocker cover
B—Tappet adjusting screws and locknuts

8. Remove the side rocker cover and slacken the tappet adjusting screws right back.
9. Remove the end plug from the front end of the rocker shaft.
10. Remove the two locating screws securing front and rear rocker shafts.

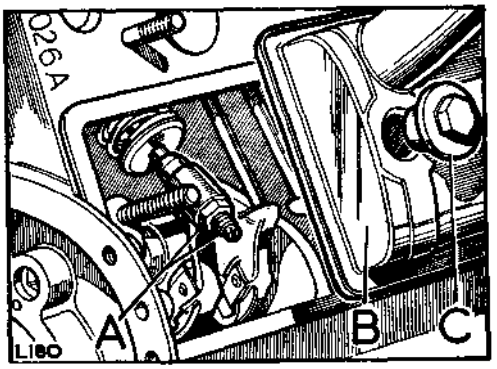


**Fig. A3-101. Side rockers and tappets**

A—Tappet adjusting screws and locknuts
B—Side rocker cover
C—Fixings for side rocker cover

11. Remove the oil feed bolt locating the distributor housing to allow removal of the shaft.

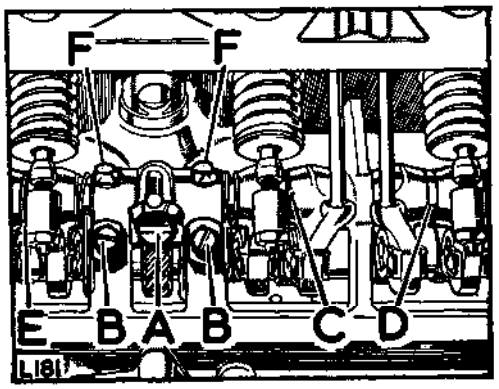


**Fig. A3-102. Camshaft and rocker shaft locating screws**

A—Oil feed locating bolt
B—Camshaft bearing locating screws
C—Spacing washer, thin
D—Spacing washer, thick
E—Spacing washer, medium
F—Rocker shaft locating screws

*Operations marked with an asterisk (*) can be carried out with the engine installed in the vehicle*

## Operation A3-26—*continued*

12. Extract the front and rear rocker shafts, using special extractor tool (Part No. 262749).

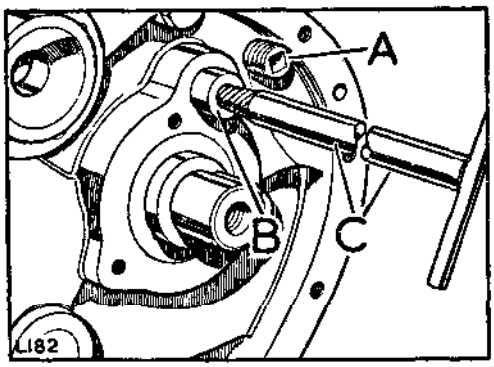


**Fig. A3-103. Extractor, rocker shaft**

A—Plug B—Rocker shaft C—Extractor

13. Remove exhaust valve rockers, inlet cam followers, springs and spacers. Note the sequence of assembly. Push rods should be lifted clear of the rockers as they are removed.

### To refit

**Note:** Before refitting, fit a suitable slave bolt and packing washer into the tapped hole at front end of camshaft. This will enable the camshaft to be rotated as required to position the cam lobes away from the rocker assembly being fitted.

1. Replace the rear rockers, cam followers, springs, spacers and shims in the order removed. Fig. A3-104 refers.
2. Feed the rear rocker shaft through the rockers, followers, etc. Ensure that the locating screw hole in the shaft is to the rear; use the extractor tool to align the hole with the hole in the block.
3. Secure the shaft with the locating screw and lock washer.
4. Fit the front rocker assembly, in the order removed. Fig. A3-104.

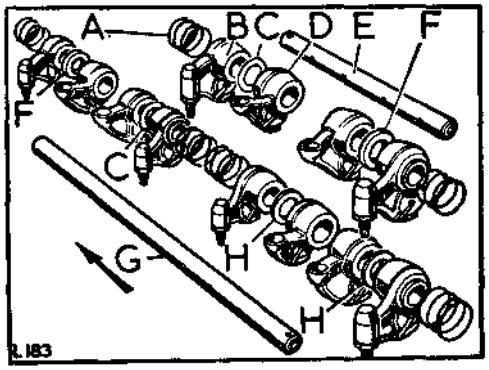


**Fig. A3-104. Arrangement of side rocker components**

A—Rocker springs (6 off)
B—Rocker with tappet screw (6 off)
C—Spacing washer, thin
D—Rocker for push rod (6 off)
E—Rear shaft (short)
F—Spacing washer, thick
G—Front shaft (longer)
H—Spacing washer, medium
Arrow indicates front of engine

5. Feed the front rocker shaft through the rockers, followers, etc. Ensure that the locating screw hole in the shaft is to the rear and in line with the hole in the block. Secure with locating screw and lock or spring washer.
6. Ensure that the inlet push rods are in position.
7. Replace the end plug.
8. Refit the timing gears and chain and carry out the valve timing procedure. Operation A3-25.
9. Refit the timing chain tensioner. Operation A3-24.
10. Refit the engine front cover. Operation A3-23
11. Adjust the tappets. Operation A3-19.
12. Refit the side and top rocker covers.
13. Refit the exhaust manifold. Operation A3-8.
14. Refit the radiator and grille panel and replenish the coolant. Operation A3-3.
15. Refit the bonnet panel. Operation A3-1.

## *Sump and internal oil strainer, to remove and refit—Operation A3-27

Workshop hand tools:
Spanner sizes: $\frac{7}{16}$ in. AF, $\frac{1}{2}$ in. AF, $\frac{5}{8}$ in. AF
Pliers, long-nosed

### Sump and internal oil strainer, remove

1. Lift and prop bonnet.
2. Drain engine oil.
3. Remove dipstick.
4. Remove the fixings securing sump to cylinder block.

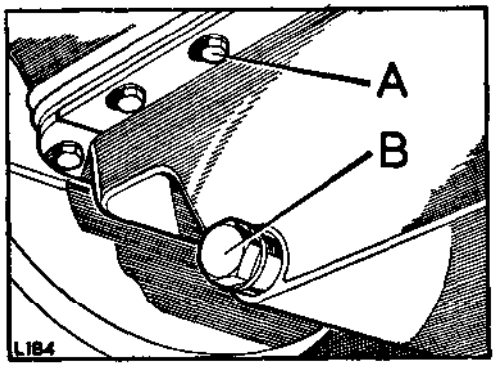


**Fig. A3-105. Sump fixings**
A—Sump fixings
B—Sump drain plug

5. Lower the sump carefully to clear oil strainer and remove.
6. Remove joint washer.
7. Remove oil strainer from pump.
8. Wash all components using clean fuel.

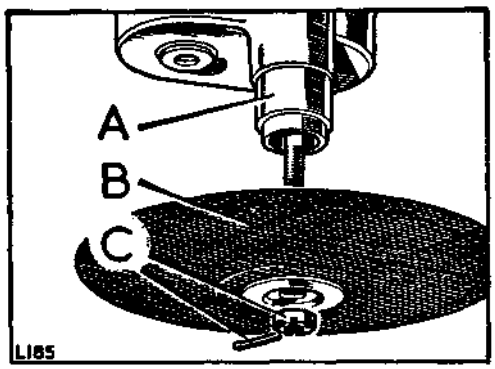


**Fig. A3-106. Oil pump strainer**
A—Oil pump
B—Strainer
C—Strainer fixings

### Sump and internal oil strainer, refit

1. Reverse removal procedure.
2. Use new sump joint washer.
3. Ensure that the two set bolts ($\frac{5}{16}$ in. UNC) are fitted to the timing cover.
4. Refill the engine to the correct level with the recommended grade of lubricant.

**Engine Lubricant Capacity**
**Bonneted Control Model, 2.6. litre Petrol**

| | Imperial Pints | US. Pints | Litre |
|---|---|---|---|
| Engine .. .. | 12 | 14.4 | 6.25 |
| Filter .. .. | 1 | 1.2 | 0.5 |
| Total .. | 13 | 15.6 | 6,75 |

5. Run the engine and check for oil leaks.

*Operations marked with an asterisk (*) can be carried out with the engine installed in the vehicle*

## *Oil pump and drive shaft, to remove and refit—Operation A3-28

*(For oil pump overhaul, Operation A3-29 refers)*

Workshop hand tools:
Spanner sizes: ½ in. AF, ⅝ in. AF, ¾ in. AF open end

Special tools:
12 volt test lamp

### To remove

1. Remove bonnet panel. Operation A3-1.
2. Remove the distributor and short drive shaft. Operation A3-18.
3. Remove the crankcase sump. Operation A3-27.
4. Remove the non-adjustable oil pressure relief valve. Take care to retain the steel ball which is released during this procedure.

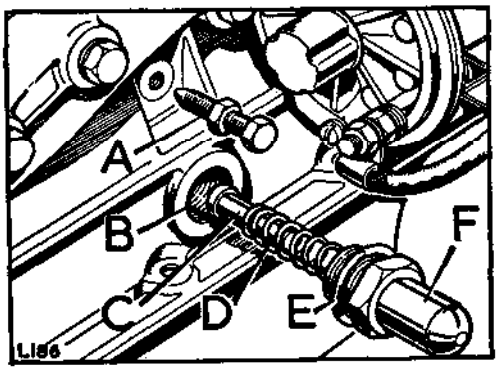


**Fig. A3-107. Oil pressure relief valve details**

A—Oil pump locating screw
B—Housing for relief valve at RH side of engine block
C—Plunger
D—Spring
E—Joint washer
F—Retaining cap

5. Remove the oil pump locating screw and withdraw the oil pump and strainer assembly from the engine.
6. Remove the side rocker cover.

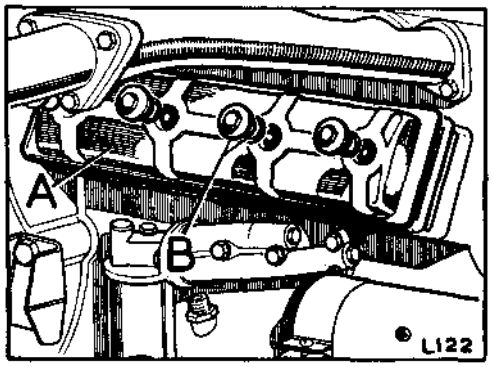


**Fig. A3-108. Side rocker cover details**

A—Side rocker cover
B—Cover fixings

7. Remove the oil feed bolt and lock washer locating the distributor housing inside rocker chamber.

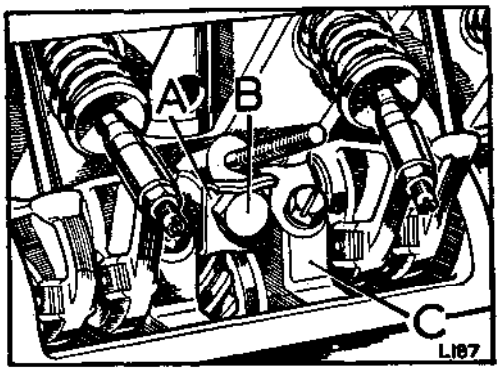


**Fig. A3-109. Distributor housing locating bolt**

A—Lock washer
B—Oil feed and locating bolt
C—Side rocker chamber

8. Lift out the distributor housing and withdraw the oil pump and distributor gear drive shaft toward the cylinder head.

*Operations marked with an asterisk (*) can be carried out with the engine installed in the vehicle*

## Operation A3-28—*continued*

**To refit**

1. Offer oil pump to housing, align pressure relief valve housing and the locating screw bore with the respective tappings in the engine block and fit the locating screw and locknut. Fig. A3-107 refers.
2. Fit the relief valve components to the pump, referring to Fig. A3-107 for assembly detail.
3. Rotate the engine in direction of rotation until the TDC mark on the flywheel or crankshaft pulley, as applicable, aligns with the timing pointer with both valves on No. 1 cylinder fully closed (i.e. No. 1 cylinder commencing firing stroke).

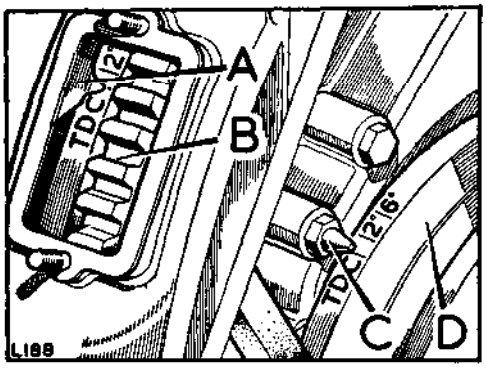


**Fig. A3-110. TDC mark aligned with pointer**

A—Timing pointer, early engines
B—Flywheel
C—Timing pointer, later engines
D—Crankshaft pulley

4. Fit the oil pump and distributor gear drive shaft to the engine with the lower splines engaged in the oil pump, and the skew gear engaged with the camshaft.
5. Turn the drive shaft using a suitable screwdriver, until the offset drive slot in the end of the shaft is positioned as illustrated in Fig. A3-111.
6. Fit the distributor housing to the engine and locate and secure with the oil feed bolt and lock washer. Fig. A3-109 refers.
7. Insert the short drive shaft, engaging the offset drive in the end of the main shaft.

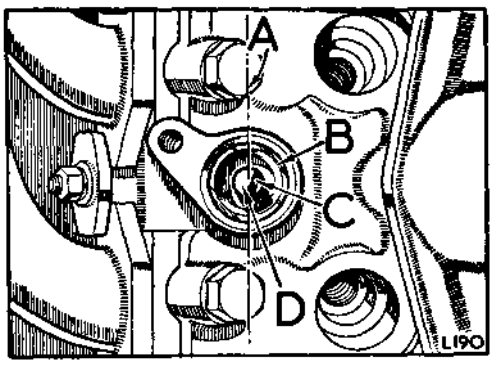


**Fig. A3-111. Position of drive slot in gear shaft**

A—Parallel with centre line through engine
B—Distributor housing
C—Drive slot
D—Larger segment of drive

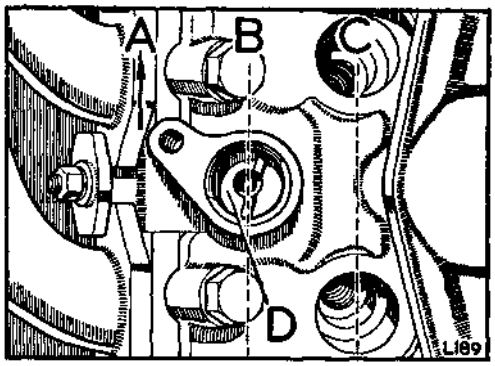


**Fig. A3-112. Short drive shaft in position**

A—Front of engine
B—Centre line parallel with line through plug holes
C—Centre line through spark plug holes
D—Larger segment of drive

8. Align the offset dog on the distributor shaft with the offset slot in the short drive shaft and fit distributor to engine. The distributor rotor arm should now be in the No. 1 cylinder firing position and the distributor vacuum unit toward the front of the engine.

## Operation A3-28—*continued*

9. Refit the rocker side cover. Fig A3-108 refers.
10. Carry out the ignition timing procedure. Operation A3-17.
11. Refit the crankcase sump and replenish the engine lubricating oil. Operation A3-27.
12. Refit the bonnet panel. Operation A3-1.

## Oil pump, to overhaul—Operation A3-29

*(For oil pump removal, Operation* A3-28 *refers)*

Workshop hand tools:
Spanner sizes: $\frac{7}{16}$ in. AF, $\frac{1}{2}$ in. AF
Straight edge, Feeler gauges

### Oil pump, strip

1. Remove the oil pump strainer, secured by a castle nut and split pin.
2. Remove the oil pump cover, secured by four bolts and spring washers.
3. Lift out the gears, if necessary drive out the bush in the idler gear.
4. Remove the idler gear spindle, which is screwed into the cover. If necessary, drive out the bush at the top of the oil pump body.

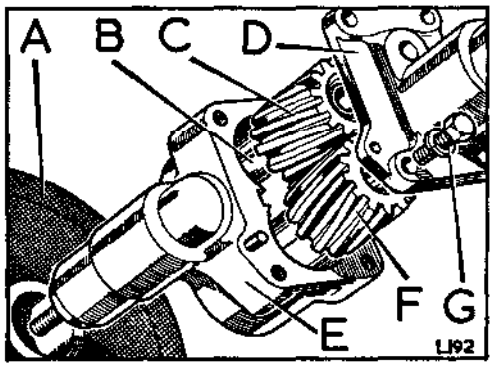


**Fig. A3-113. Exploded view of oil pump**

A—Strainer
B—Idler gear spindle
C—Idler gear and bush assembly
D—Oil pump cover
E—Oil pump body
F—Driving gear
G—Pump cover fixings

5. Clean all parts, examine for wear and renew as necessary.

### Oil pump, rebuild

1. If removed, press a new bush into the body and ream in position to .5625 in. plus .001 in. (14,28 mm plus 0,02 mm). Ensure correct alignment with the bore at the bottom end of the pump body, and the bush should be a light drive fit.
2. If removed, press a new bush in the idler gear. Drill the $\frac{1}{8}$ in. (3,0 mm) oilway and ream in position to .500 in. plus .001 in. (12,7 mm plus 0,02 mm).
3. If removed, replace the idler gear spindle.
4. Refit the gears and check tolerances as follows:
   (a) Check the radial clearance, which should be .001 to .004 in. (0,02 to 0,10 mm).
   (b) Check the backlash between gears, which should be .008 to .012 in. (0,20 to 0,30 mm).
   (c) Check the end-float of the gears:
   Steel .002 to .005 in. (0,05 to 0,12 mm)
   Aluminium .003 to .006 in. (0,07 to 0,15 mm)
   Renew parts as necessary. If the clearances are incorrect, oil flow will be insufficient.

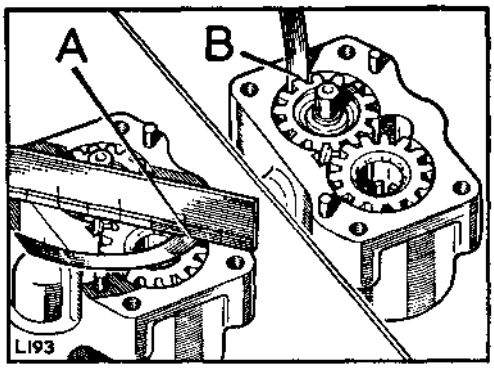


**Fig. A3-114. Checking clearance of oil pump gears**

A—Checking end-float
B—Checking radial clearance

5. When the tolerances are correct, fit the idler gear to the spindle. Mesh the driving gear (steel) with the idler gear, inserting the splined end of the gear first.
6. Fit the housing to the pump cover, renewing the locknuts.
7. Fit the oil strainer.

## *Clutch assembly and flywheel, remove and refit—Operation A3-30

*(For overhaul instructions, Section B refers. For flywheel data see Engine detail data at end of this Section)*

Workshop hand tools:
Spanner sizes: $\frac{1}{2}$ in. AF, $\frac{5}{8}$ in. AF socket
$\frac{7}{16}$ in. AF open end, $\frac{7}{16}$ in. AF socket
$\frac{7}{16}$ in. BSF open end
1 lb hammer, Small chisel

Special tools:
Part No. 605022—Clutch plate alignment gauge
Torque wrench
Dial test indicator

### To remove

**Note:** If it is required to remove the clutch only, it is not necessary to remove the seat base nor completely remove the gearbox. Proceed with the gearbox removal, Operation C1-3, but only withdraw the gearbox rearward approximately 5 in (127 mm), to give access to the clutch fixings,

1. Remove the gearbox tunnel and front panel. Operation A3-4.
2. Remove the gearbox complete, as detailed in Section C.
3. Remove the starter motor, Operation A3-9, to facilitate subsequent procedure.
4. Mark the position of the clutch assembly cover plate in relation to the flywheel. The marks are for use during subsequent refitting, when, with the marks aligned, the original balance condition will be regained.
5. Remove the fixings and withdraw the clutch assembly from the flywheel. Withdraw the clutch plate which is released during this procedure.

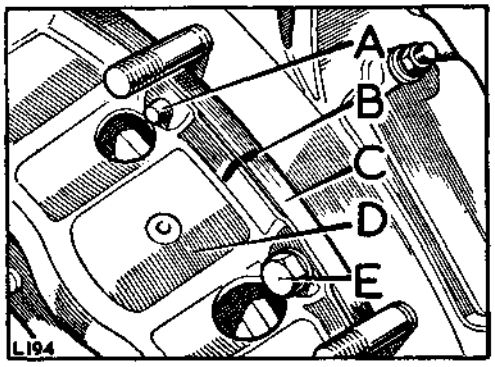


**Fig. A3-115. Clutch assembly fixings**

A—Locating dowels
B—Suitably mark clutch cover relative to flywheel
C—Flywheel
D—Clutch assembly
E—Fixings for clutch (6 off)

6. Remove the fixings and withdraw the flywheel.

### To refit

1. Fit the flywheel to the crankshaft and tighten the fixings to 60 lb ft to 65 lb ft (8,5 mkg to 9,0 mkg) torque load. Do not lock the fixings at this stage.
2. Check the run-out on the flywheel face as illustrated. The run-out must not exceed .002 in. (0,05 mm).

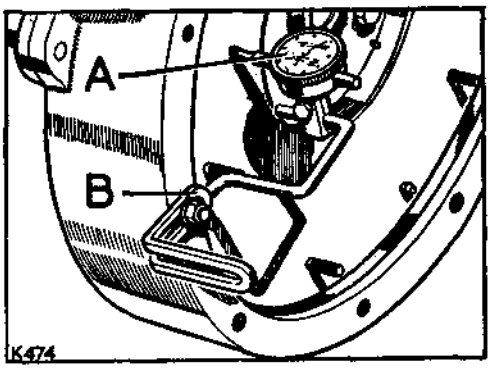


**Fig. A3-116. Checking run-out on flywheel face**

A—Dial test indicator
B—Suitable bracket

3. Lock the flywheel fixings.
4. Offer the clutch driven plate to the primary shaft and ensure that it will slide easily on all the splines.
5. Place the driven plate in position on the flywheel with the longer end of the central boss away from the engine.
6. Centralise the driven plate with the flywheel, using a slave primary shaft or the special centralising tool, Part No. 605022.
7. Offer up the clutch assembly to the flywheel, aligning the previously made relationship markings. Fig. A3-115 refers.
8. Fit the fixings and tighten evenly one turn at a time to 22 lb ft to 25 lb ft (3,0 mkg to 3,5 mkg) torque load, using diagonal selection to avoid distortion of the clutch cover.

*Operations marked with an asterisk (*) can be carried out with the engine installed in the vehicle*

## Operation A3-30—*continued*

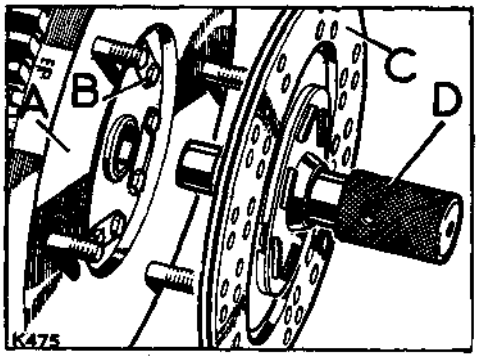


**Fig. A3-117. Centralising clutch driven plate**

A—Flywheel
B—Flywheel fixings
C—Driven plate
D—Centralising tool or slave primary shaft

9. Lock the clutch assembly fixings.
10. Remove the centralising tool or slave shaft.
11. Refit the starter motor, Operation A3-9.
12. Refit the gearbox as detailed in Section C.
13. Check and set the clutch pedal adjustment as detailed in Section B.
14. Refit the gearbox tunnel and front panel. Operation A3-4.

## *Rear main bearing oil seal and flywheel housing, remove and refit—Operation A3-31

Workshop hand tools:

Spanner sizes: $\frac{7}{16}$ in. AF, $\frac{9}{16}$ in. AF open end
$\frac{9}{16}$ in. BSF, $\frac{7}{16}$ in. BSF open end
$\frac{7}{16}$ in. AF, $\frac{1}{2}$ in. AF, $\frac{9}{16}$ in. AF, $\frac{5}{8}$ in. AF,
$\frac{13}{16}$ in. AF socket, $\frac{1}{2}$ in. AF ring
$\frac{7}{16}$ in. BSF socket
Screwdriver (medium), Pliers, snipe nosed
1 lb hammer, Small chisel, Feeler gauges

Special tools:

Part No. 600963—Engine lifting sling
Part No. 270304—Guides for rear main bearing oil seal (2 off)
Part No. 605022—Clutch plate alignment gauge
Torque wrench

### To remove

1. Remove bonnet panel. Operation A3-1.
2. Remove the gearbox tunnel and front cover. Operation A3-4.
3. Remove gearbox assembly. Section C.
4. Remove the starter motor. Operation A3-9.
5. Remove the crankcase sump. Operation A3-27.
6. Remove the clutch assembly and flywheel. Operation A3-30.
7. Fit suitable lifting equipment and support the engine weight.

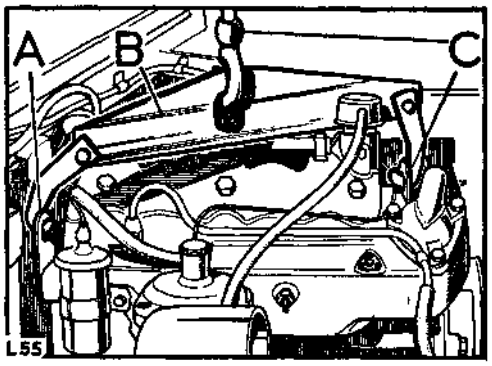


**Fig. A3-118. Lifting sling in position**

A—Rear lifting bracket
B—Engine lifting sling, Part No. 600963, engaged in lifting brackets
C—Front lifting bracket

8. Remove the packing piece from between the flywheel housing and the chassis cross-member, previously fitted during gearbox removal.
9. Remove the fixings and withdraw the flywheel housing. Remove the oil sealing ring.

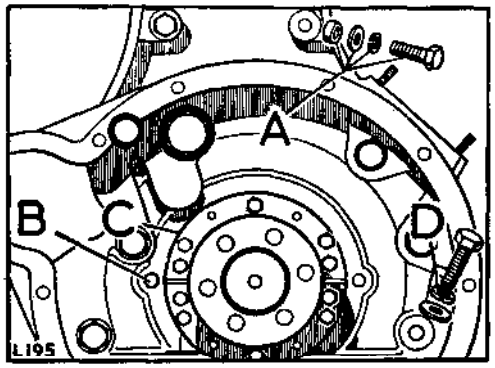


**Fig. A3-119. Flywheel housing fixings**

A—Fixings at flange
B—Locating dowels
C—Oil seal in recess
D—Fixings in counterbores

10. Remove the rear bearing cap.
11. Remove the fixings and detach the two halves of the rear main bearing oil seal retainer from the cylinder block and rear bearing cap respectively. The halves are dowel located.

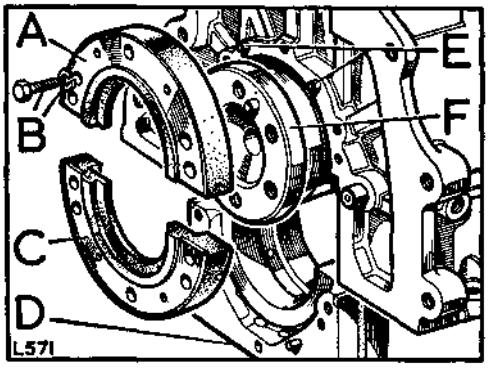


**Fig. A3-120. Seal retainer fixings**

A—Seal retainer upper half
B—Fixings for seal retainers
C—Seal retainer lower half
D—Rear main bearing cap
E—Locating dowels
F—Crankshaft flange

*Operations marked with an asterisk (*) can be carried out with the engine installed in the vehicle*

## Operation A3-31—*continued*

12. Remove the oil seal from the crankshaft. Fig. A3-122 refers.

### Rear main bearing oil seal, to refit

1. Assemble the garter spring on the oil seal journal of the crankshaft, laying the spring around the journal, with the hook and the eye adjacent to one another, then insert the hook into the eye. See Fig. A3-121. Care must be taken to ensure that during this operation the spring is not stretched at all.

   The spring should be moved along the journal until it is against the thrower flange.

2. Apply Silicone Grease MS4 (provided in the replacement oil seal kit) to the crankshaft oil seal journal and to both sides of the split oil seal sealing lip.

   Open the split seal sufficiently to allow it to be fitted over the crankshaft oil seal journal. Recess in oil seal must be towards thrower flange and garter spring.

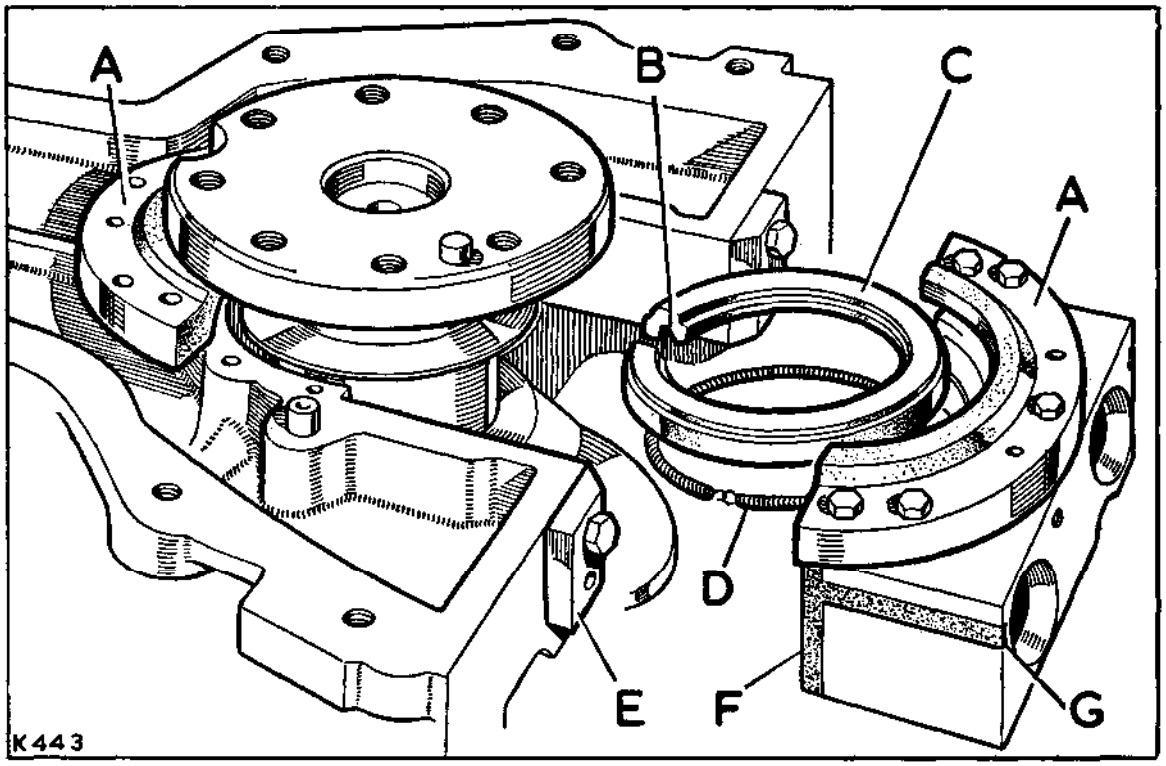


**Fig. A3-121. Oil seal details**

A—Retainer halves
B—Split line of seal to be towards top of engine
C—Split oil seal
D—Garter spring, hook and eye to be midway between split and hinge of oil seal when fitted
E—Guides, Part No. 270304, for rear main bearing cap 'T' seals
F—Trim these edges before fitting to avoid foul on seating radius
G—Trim these ends to allow $\frac{1}{32}$ in. (0,8 mm) protrusion when cap is fitted

## Operation A3-31—*continued*

The oil seal must not be repeatedly fitted and removed from the crankshaft, as this can damage the sealing lip.

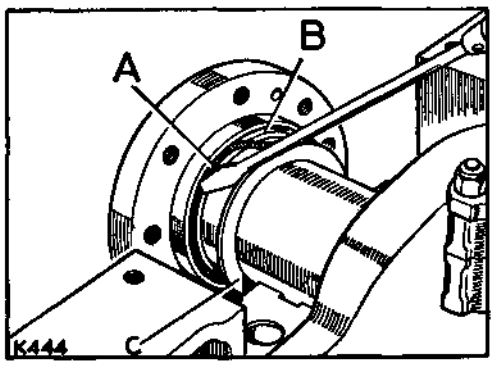


**Fig. A3-122. Fitting garter spring to recess**

A—Garter spring
B—Oil seal recess for garter spring
C—Thrower flange

3. Ensure that the hook and eye of the garter spring are located mid-way between the split and hinge of the oil seal. Then, using a small screwdriver or similar tool, gently ease the spring into the recess in the oil seal.

4. Rotate the oil seal until the split is on the vertical axis pointing towards the cylinder head and in its approximate running position on the journal; this position is important.

   Apply Hylomar SQ32M sealing compound to the seal diameter of the two half plates, using either an applicator or a brush.

   **Important:** Do not degrease the half seal plates with trichlorethylene, but wipe clean with a dry cloth prior to applying the Hylomar.

5. Fit one half of the oil seal retainer on to the crankcase dowels. The oil seal should be compressed to assist assembly, also ensure that it is correctly located in the retainer recess. Bolt the retainer to the crankcase, do not fully tighten the fixings at this stage. In order to fit the bolt it will be necessary to rotate the crankshaft; it is essential to hold the seal so that it does not rotate with the crankshaft.

6. Bolt the other half of the oil seal retainer on to the main bearing cap, in the same way. Apply Silicone grease MS4 to the 'T' seals and fit them to the main bearing cap. The cap must be off the crankcase for these operations. Trim the edges of the 'T' seals as illustrated to prevent them from fouling the cylinder block when fitted.

7. Fit the main bearing cap with the seal retainer, bearing shell and 'T' seals to the crankcase until there is a $\frac{1}{32}$ in. (0,8 mm) gap between the cap and crankcase. Use the guides, Part No. 270304 to feed the 'T' seals past the crankcase edges, see Fig. A3-121.

8. Ensure that the seal remains correctly located in the retainer recess.

9. Pull the cap down slowly, ensuring there is no buckling of the split seal or misalignment of the butt joint.

10. Tighten the cap bolts to 75 lb ft (10 mkg) torque load and recheck that the seal is located correctly in the housing.

11. Finally tighten the bolts securing the retainer halves. Turn the bolt heads so that the hexagon corners will not foul the flywheel housing seal when fitting.

### Flywheel housing, to refit

12. Replace the oil seal in the flywheel housing recess and fit the housing to the cylinder block. Fig. A3-119 refers.

13. Refit the clutch and flywheel. Operation A3-30.

14. Refit the crankcase sump. Operation A3-27. During this procedure trim the ends of the rear main bearing 'T' seals to allow approximately $\frac{1}{32}$ in. (0,8 mm) protrusion from the rear bearing cap face. Fig. A3-121 refers.

## Operation A3-31—*continued*

15. Refit the starter motor. Operation A3-9.
16. Refit the gearbox, as described in Section C, and remove the engine lifting equipment.
17. Refit the front floor. Operation A3-4.
18. Replenish engine lubricating oil as necessary.
19. Refit the bonnet panel. Operation A3-1.

**Engine Lubricant Capacity**
**Bonneted Control Model, 2.6 Litre Petrol**

| | Imperial Pints | U.S. Pints | Litres |
|---|---|---|---|
| Engine .. .. | 12 | 14.4 | 6,25 |
| Filter .. .. | 1 | 1.2 | 0,5 |
| Total .. | 13 | 15.6 | 6,75 |

## *Pistons and connecting rods, remove and refit—Operation A3-32

*(For overhaul instructions, Operation A3-33 refers)*

Workshop hand tools:
Spanner sizes: $\frac{7}{16}$ in. AF, $\frac{1}{2}$ in. AF, $\frac{5}{8}$ in. AF, $\frac{3}{4}$ in. AF sockets
$\frac{1}{2}$ in. AF, $\frac{7}{16}$ in. AF, $\frac{3}{8}$ in. AF, $\frac{5}{8}$ in. AF, $\frac{9}{16}$ in. AF open end, $\frac{1}{2}$ in. AF ring
$\frac{5}{16}$ in. BSF, $\frac{3}{8}$ in. BSF open end
14 mm plug spanner
Screwdriver (medium), Pliers

Special tools:
Torque wrench

### To remove

1. Remove the bonnet panel. Operation A3-1.
2. Remove the air cleaner. Operation A3-2.
3. Remove the cylinder head. Operation A3-21.
4. Remove the crankcase sump. Operation A3-27.
5. With two pistons at bottom dead centre (BDC) remove the connecting rod cap fixings.
6. Remove the caps and withdraw the connecting rod bearing halves. Retain the caps and bearings in related sets.

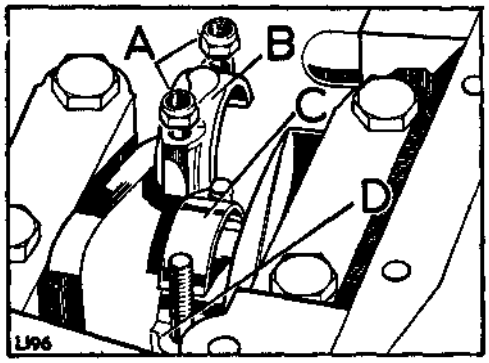


**Fig. A3-123. Connecting rod big-end details**

A—Fixings for connecting rod cap
B—Connecting rod cap
C—Connecting rod bearing lower half
D—Connecting rod big-end

7. Withdraw the pistons and attached connecting rods from the top of the bore.
8. Position the remaining pistons at BDC and repeat the removal procedure.
9. Retain the removed components in related sets.

### To refit

**Note:** If replacement components are to be fitted, the checks detailed in 'overhaul—Operation A3-33' must be carried out as necessary.

1. Position the piston rings so that the piston rings end gaps do not align with each other or with the gudgeon pin bore in the piston.
2. Position the crankshaft with two crank pins at BDC and insert the appropriate pistons and attached connecting rods into the cylinder bores, from the top of the cylinder block, using a suitable piston ring clamp.

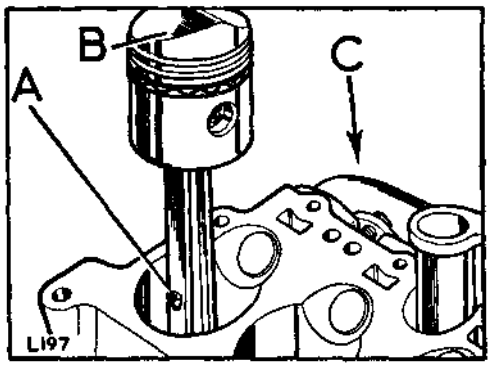


**Fig. A3-124. Refitting pistons and connecting rods**

A—Oil hole in connecting rod positioned away from camshaft side of engine
B—Flat on piston crown positioned away from camshaft
C—Camshaft side of block

3. Lubricate the journals and bearing halves and fit the appropriate bearing halves to the connecting rods and caps.

*Operations marked with an asterisk (*) can be carried out with the engine installed in the vehicle*

## Operation A3-32—*continued*

4. Fit the connecting rod caps and new fixing nuts with the locating tongues on the upper and lower bearing halves at the same side of the connecting rod. Tighten the fixings to 20 lb ft (2,8 mkg).

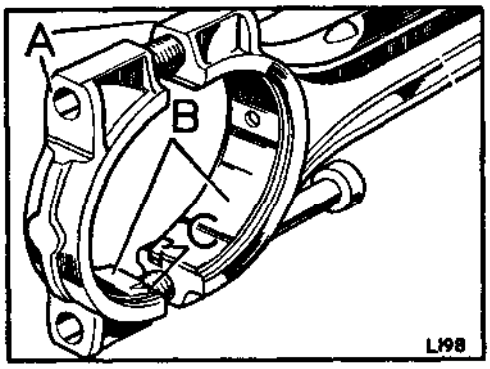


**Fig. A3-125. Connecting rod big-ends**

A—Cap and connecting rod, check cylinder bore identity numbers correspond
B—Bearing halves located by tongues
C—Tongues are positioned at same side of connecting rod

5. Repeat the procedure to fit the remaining piston assemblies.

6. Refit the crankcase sump. Operation A3-27.
7. Refit the cylinder head. Operation A3-21.
8. Set the tappet clearances as detailed in Operation A3-19.
9. Refill the engine coolant system.

**Coolant System**
**Bonneted Control Model, 2.6 Litre Petrol**

| Imperial Pints | U.S. Pints | Litres | Anti-freeze | Frost Precaution |
|---|---|---|---|---|
| 20 | 24 | 11,2 | 33⅓% | —32°C (—25°F) |

10. Replenish the engine lubrication system.

**Engine Lubricant Capacity**
**Bonneted Control Models, 2.6 Litre Petrol**

| | Imperial Pints | US Pints | Litres |
|---|---|---|---|
| Engine .. .. | 12 | 14.4 | 6,25 |
| Filter .. .. | 1 | 1.2 | 0,5 |
| Total .. .. | 13 | 15.6 | 6,75 |

11. Refit the bonnet panel. Operation A3-1.

## Pistons and connecting rods, overhaul—Operation A3-33

*(For removal and refitting instructions, Operation A3-32 refers)*

Workshop hand tools:
Spanner sizes: $\frac{7}{16}$ in. AF socket
Circlip pliers, Feeler gauges

Special tools:
Torque wrench
Part No. 605238—'Plastigage' strip
Piston ring clamp

### To dismantle

**Note:** During the following procedures retain all components in related sets to facilitate subsequent assembly.

1. Remove the piston rings using suitable expanding pliers.
2. Remove circlips and withdraw gudgeon pins. Where piston crowns are marked with an 'X', withdraw the gudgeon pin toward the 'X' side.

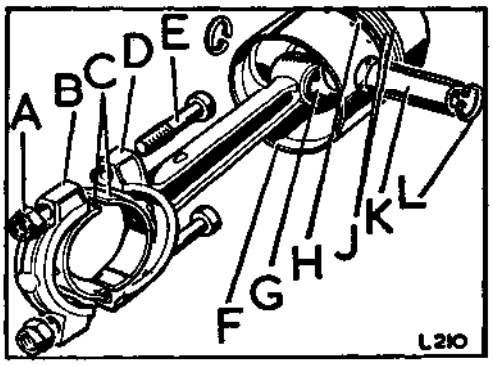


**Fig. A3-126. Exploded view of piston and connecting rod**

A—Connecting rod cap fixings
B—Connecting rod cap
C—Bearing halves
D—Connecting rod
E—Fixing bolts
F—Piston
G—Gudgeon pin bush
H—Scraper ring
J—Compression rings
K—Gudgeon pin
L—Retaining circlips for gudgeon pin

### Pistons, check

1. New piston assemblies are available for replacement purposes in standard diameter and by .010 in. (0,25 mm) oversizes up to .040 in. (1 mm).
2. Standard size pistons are graded in diameter size differences of .0002 in. (0,005 mm). This grading does not apply to oversize pistons. The grade letter which is stamped on the piston crown represents a diameter dimension as follows:

| Grade letter | Cylinder bore diameter |
|---|---|
| 'Z' | Nominal to plus .0002 in. (0,005 mm) above nominal. |
| 'A' | .0002 in. to .0004 in. (0,005 mm to 0,01 mm) above nominal. |
| 'B' | .0004 in. to .0006 in. (0,01 mm to 0,015 mm) above nominal. |
| 'C' | .0006 in. to .0008 in. (0,015 mm to 0,02 mm) above nominal. |
| 'D' | .0008 in. to .0010 in. (0,02 mm to 0,025 mm) above nominal. |

3. When fitting standard pistons in a comparatively new engine, a graded piston, corresponding to the piston removed, should be fitted. However, a check must still be made to ensure that the clearance falls within the limits laid down.
4. For example: If the vehicle has done little mileage and there is no appreciable bore wear, a graded piston of the same size as that taken out should be used; however, if a certain amount of bore wear is apparent, it may be necessary to fit a piston two or three grades larger than the one removed. In the case of a top-limit piston fitted as original equipment, it may be necessary to rebore to the first oversize to obtain the correct piston fit.
5. The grade size of any particular bore is also stamped on the cylinder block exhaust manifold face, using the same letters as stamped on the piston crown.
6. When fitting pistons, standard or oversize, into a new or rebored cylinder block, the clearance should be checked as follows:
   (a) Clearance in the bore, measured at the bottom of the piston skirt at right angles to the gudgeon pin — .002 to .0025 in. (0,05 to 0,06 mm).
   (b) Clearance in the bore, measured at the top of the piston skirt at right angles to the gudgeon pin — .003 to .0035 in. (0,08 to 0,09 mm).

*Operations marked with an asterisk (*) can be carried out with the engine installed in the vehicle*

## Operation A3-33—*continued*

In the absence of other suitable measuring instruments a long feeler, .0035 in. (0,09 mm) thick, may be used. Insert the feeler against the thrust side of the bore, as illustrated, with the piston located crown downward. The piston should become a tight fit when the top of the skirt (immediately below the scraper ring groove) enters the bore. Pistons to be checked without the piston rings fitted.

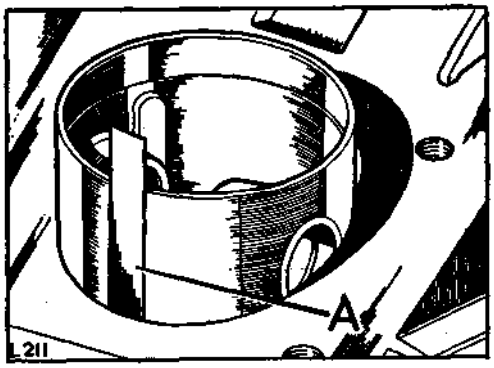


**Fig. A3-127. Checking piston clearance with feeler gauge**

A—Feeler gauge

7. To check new piston rings, support the ring in the bore with a slave piston.

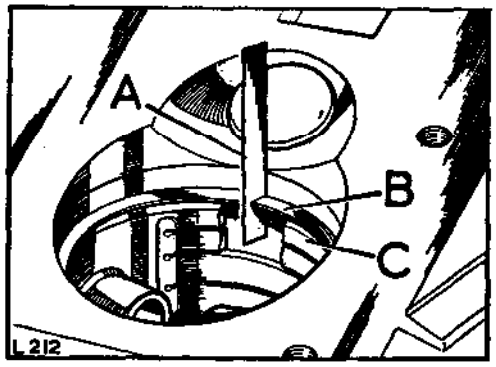


**Fig. A3-128. Checking piston ring gap**

A—Feeler gauge
B—Piston ring
C—Slave piston

Using a feeler gauge, measure the ring gap, which should be:

| | |
|---|---|
| Compression rings .. | .015 to .020 in. (0,4 to 0,5 mm) |
| Scraper ring .. .. | .015 to .033 in. (0,4 to 0,8 mm) |

If necessary, use a very fine-cut flat file and carefully increase the gap as required.

Compression rings are marked 'TOP' on one face and must be fitted accordingly.

8. Check piston ring side clearance in piston groove, which should be:

| | |
|---|---|
| Compression ring .. | .0018 to .0038 in. (0,05 to 0,09 mm) |
| Scraper ring .. .. | .002 to .004 in. (0,05 to 0,10 mm) |

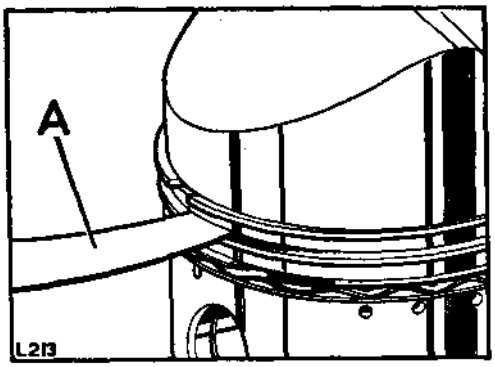


**Fig. A3-129. Checking ring clearance in groove**

A—Feeler gauge

### Connecting rods, check

1. Check connecting rod alignment with a suitable alignment jig.
2. Check that the connecting rods and caps have not been filed.
   (a) Select the correct cap for each connecting rod as denoted by the number stamped on the joint faces. This number also indicates the crankpin to which it must be fitted.

   Assemble the connecting rods, less shell bearings, with corresponding numbers together.

## Operation A3-33—*continued*

(b) Tighten the securing nuts to the correct torque, then slacken one of them right off and check that there is no clearance at the joint face. A clearance indicates that the rods or caps have been filed and the complete connecting rod must be replaced.

Tightening torque for connecting rod bolts:

20 lb ft (2,8 mkg).

New bolts and self-locking nuts must be used for final assembly. Use the original bolts and nuts for checking purposes.

Check the bearing nip as follows:

(a) Fit the bearing shells and tighten both nuts to correct torque. Slacken one nut right off and check the nip with a feeler gauge, as illustrated. Clearance should be .002 to .004 in. (0,05 to 0,10 mm).

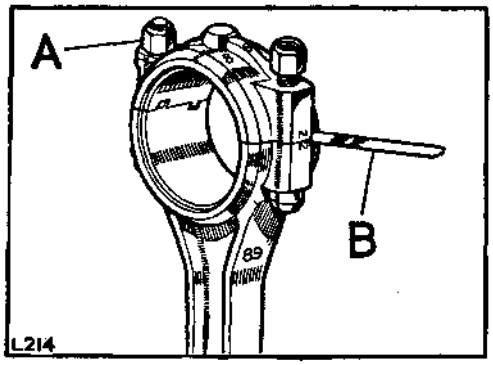


**Fig. A3-130. Checking big-end bearing nip**

A—Fixing, torque loaded
B—Feeler gauge

(b) Select bearing shells to give correct nip.

(c) Assemble each connecting rod assembly to its respective crankshaft journal and repeat the connecting rod bearing nip check. Again the clearance between the connecting rod and cap must be .002 in. to .004 in. (0,05 mm to 0,10 mm).

Alternatively, use 'Plastigage' strip inserted between the connecting rod bearings and the crankshaft journals. This method will indicate the actual clearance between the bearings and the journals and must be .001 in. to .0025 in. (0,025 mm to 0,063 mm) with the fixings torque loaded as in the alternative method.

'Plastigage' is available under Rover Part No. 605238. Remove all traces of 'Plastigage' from the components after use.

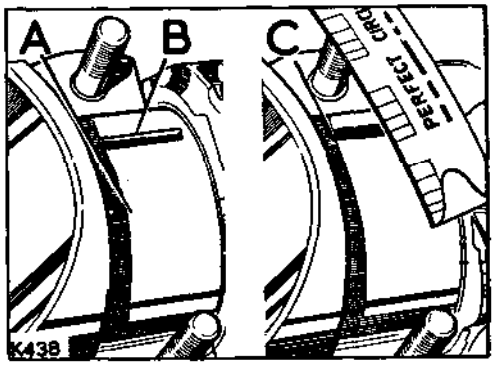


**Fig. A3-131. Checking connecting rod and bearing clearance, using 'Plastigage'**

A—Journal for connecting rod
B—Initial position of 'Plastigage'
C—Flattened 'Plastigage', do not remove until width has been measured against graduated scale on packet

3. To check big-end side clearance, assemble connecting rods to respective crankpins. Insert a feeler gauge between the end face of the rod and the crankpin shoulder.

   Side clearance should be .006 in. to .015 in. (0,15 mm to 0,38 mm).

4. Remove connecting rods from crankpins. Ensure the bearing shells are kept with respective rods.

### Fitting pistons to connecting rods

1. The gudgeon pin should be a good hand push fit into the piston bore at a temperature of 50° to 70°F (10° to 21°C) and should not fall out of the piston under its own weight.

## Operation A3-33—*continued*

2. If it is necessary to replace the gudgeon pin bush, this must be done with the aid of a power press. Ensure that the oil hole in the bearing exactly coincides with the hole in the connecting rod. The bush should be a .001 to .003 in. (0,025 to 0,076 mm) interference fit in the connecting rod. Hone the bush when fitted to the connecting rod to internal diameter .8755 in.—.0005 in. (22,24—0,0127 mm). Ensure correct alignment is maintained whilst honing.

3. Fit a new circlip in the side of the piston opposite the 'X'.

   Place the connecting rod into the piston, ensuring spray hole in connecting rod is to the same side as the bore number stamped on the piston crown, thrust side.

   On new pistons the machined section of the piston crown goes to the same side as the spray hole in the connecting rod Fig. A3-124 refers. Line up the connecting rod with the gudgeon pin and push pin into position. Fit second new circlip.

## Crankshaft and main bearings, remove and refit—Operation A3-34

*(For overhaul instructions, Operation A3-35 refers)*

Workshop hand tools:
Spanner sizes: $\frac{7}{16}$ in. AF, $\frac{9}{16}$ in. AF, $\frac{13}{16}$ in. AF open end
$\frac{7}{16}$ in. AF, $\frac{1}{2}$ in. AF, $\frac{5}{8}$ in. AF, $\frac{9}{16}$ in AF
$\frac{13}{16}$ in. AF socket
$\frac{5}{16}$ in. BSF, $\frac{7}{16}$ in BSF open end
$\frac{7}{16}$ in. BSF socket
$\frac{1}{2}$ in. AF, $\frac{9}{16}$ in. AF ring
1 lb hammer, Small chisel, Feeler gauges

Special tools:
Part No. 600963—Engine lifting sling
Part No. 270304—Guides for rear main bearing oil seal (2 off)
Part No. 605022—Clutch plate alignment gauge
Torque wrench

### To remove

1. Remove bonnet panel. Operation A3-1.
2. Remove air cleaner. Operation A3-2.
3. Remove radiator and grille panel complete. Operation A3-3.
4. Remove front floor. Operation A3-4.
5. Remove engine from vehicle. Operation A3-5.
6. Remove crankcase sump. Operation A3-27.
7. Fit the engine to a suitable stand.
8. Remove oil pump. Operation A3-28.
9. Remove engine front cover. Operation A3-23.
10. Remove timing chain and tensioner. Operation A3-24.
11. Remove clutch and flywheel. Operation A3-30.
12. Remove flywheel housing. Operation A3-31.
13. Remove the connecting rod caps and bearing lower halves. Retain as related sets.

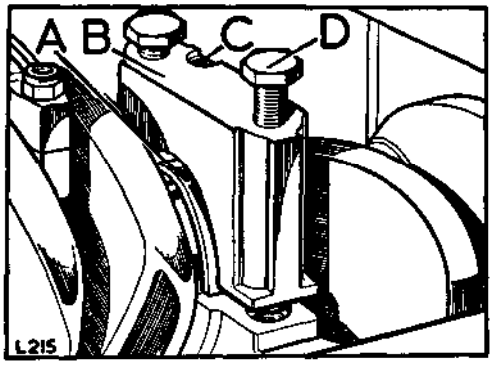


**Fig. A3-132. Crankshaft main bearing caps**

A—Bearing lower half
B—Bearing cap
C—Letter 'F' toward front of engine when refitting
D—Fixings, bearing cap to cylinder block

14. Remove the main bearing caps and lift crankshaft clear. Retain the bearing halves and caps in related sets.
15. Remove the oil seal from the crankshaft.
16. Remove the seal retainer halves.

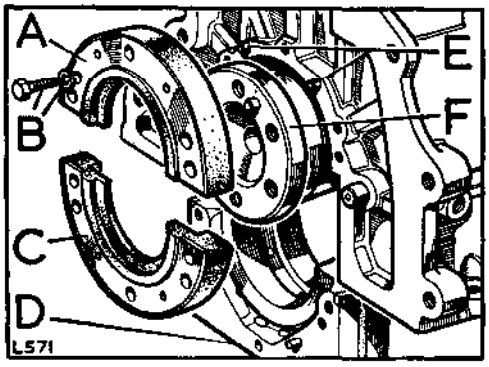


**Fig. A3-133. Oil seal retainers**

A—Seal retainer upper half
B—Seal retainer fixings
C—Seal retainer lower half
D—Rear main bearing cap
E—Locating dowels
F—Crankshaft flange

### To refit

1. Where replacement components are to be fitted, the relevant checks detailed in Operation A3-35 must be carried out.
2. Assemble the crankshaft to the engine and insert the bearing upper halves, located by tongues, to the crankcase.
3. Position a thrust washer at each side of the rear upper bearing shell. The thrust washer thicknesses must agree within .003 in. (0,08 mm).
4. Position the bearing lower halves on to the front and centre bearing caps and fit the caps.

## Operation A3-34—*continued*

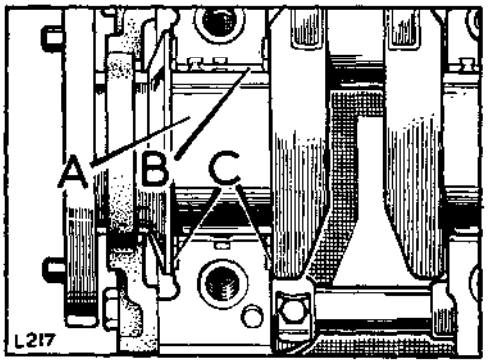


**Fig. A3-134. Thrust washer and bearing location**

A—Crankshaft journal, lubricate with clean oil
B—Bearing with tongue located
C—Thrust washers, grooved (soft metal) faces toward crankshaft web

5. Assemble the garter spring on the oil seal journal of the crankshaft as illustrated, by laying the spring around the journal, this will bring the two ends, the hook and the eye, adjacent to one another, then insert the hook into the eye. Care must be taken to ensure that during this operation the spring is not stretched at all.

   The spring should be moved along the journal until it is against the thrower flange.

6. Apply Silicone Grease MS4 to the crankshaft oil seal journal and to both sides of the split oil seal sealing lip.

   Open the split sufficiently to allow it to be fitted over the crankshaft oil seal journal. Recess in oil seal must be towards thrower flange and garter spring.

   The oil seal must not be repeatedly fitted and removed from the crankshaft, as this can damage the sealing lip.

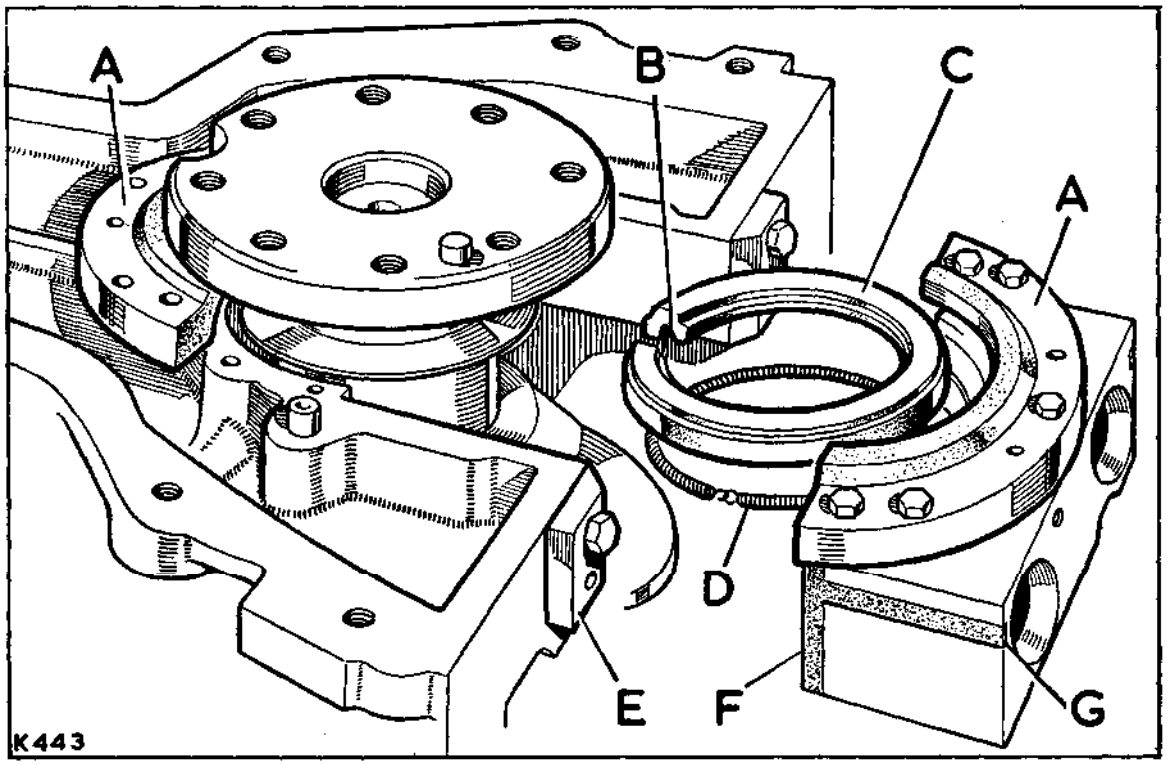


**Fig. A3-135. Oil seal details**

A—Retainer halves
B—Split line of seal to be towards top of engine when fitted
C—Split oil seal
D—Garter-spring, hook and eye to be midway between split and hinge of oil seal when fitted
E—Guides, Part No. 270304, for rear main bearing cap 'T' seals
F—Trim these edges before fitting to avoid foul on seating radius
G—Trim these ends to allow $\frac{1}{32}$ (0,8 mm) protrusion when cap is fitted to engine

## Operation A3-34—*continued*

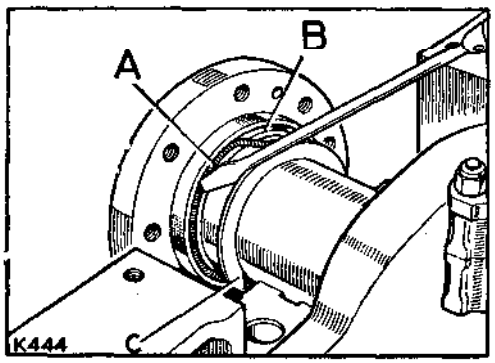


**Fig. A3-136. Fitting garter spring**

A—Garter spring
B—Oil seal recess for garter spring
C—Thrower flange

7. Rotate the oil seal until the split is on the vertical axis pointing towards the cylinder head and in its approximate running position on the journal: this position is important.

   Apply Hylomar SQ32M sealing compound to the seal diameter of the two half plates, using either an applicator or a brush.

   **Important:** Do not degrease the half seal plates with trichlorethylene, but wipe clean with a dry cloth prior to applying the Hylomar.

8. Fit one half of the oil seal retainer on to the crankcase dowels. The oil seal should be compressed to assist assembly, also ensure that it is correctly located in the retainer recess. Bolt the retainer to the crankcase, do not fully tighten the fixings at this stage. In order to fit the bolts it will be necessary to rotate the crankshaft; it is essential to hold the seal so that it does not rotate with the crankshaft.

9. Bolt the other half of the oil seal retainer on to the main bearing cap, in the same way. Apply Silicone grease MS4 to the 'T' seals and fit them to the main bearing cap. The cap must be off the crankcase for these operations.

   Trim the edges of the 'T' seals as shown to prevent them from fouling the cylinder block when fitted. Fig. A3-135 refers.

10. Fit the main bearing cap with the seal retainer, bearing shell and 'T' seals to the crankcase, until there is a $\frac{1}{32}$ in. (0,8 mm) gap between the cap and crankcase.

11. Ensure that the seal is located in the retainer recess.

12. Pull down the cap slowly, ensuring there is no buckling of the split seal or misalignment of the butt joint.

13. Tighten the seal retainer halves fixings and position the corners of the fixing heads so that they will not foul the flywheel housing oil seal when subsequently fitted.

14. Tighten all the main bearing cap fixings to a torque loading of 75 lb ft (10,0 mkg).

15. Fit the appropriate bearing shells to the connecting rod caps, ensure that the upper and lower shells are correctly located by their tongues and fit the caps to the appropriate connecting rods. Use new fixing nuts and tighten the fixings to 20 lb ft (2,8 mkg).

16. Refit the flywheel housing. Operation A3-31.

17. Refit the clutch and flywheel. Operation A3-30.

18. Refit the timing chain and tensioner. Operation A3-24.

19. Carry out the valve timing procedure as detailed in Operation A3-25.

20. Refit the engine front cover. Operation A3-23.

21. Refit the oil pump. Operation A3-28.

22. Remove the engine from the stand, using suitable lifting equipment.

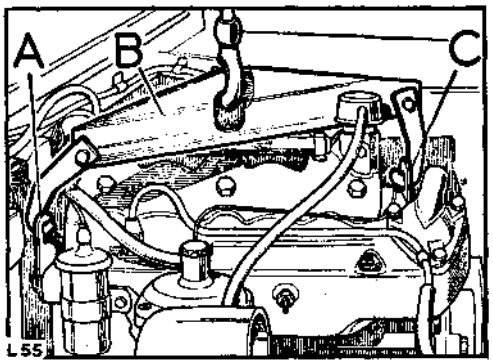


**Fig. A3-137. Engine lifting sling in position**

A—Rear lifting bracket
B—Lifting sling, Part No. 600963
C—Front lifting bracket

23. Refit the crankcase sump. Operation A3-27.

24. Refit engine to vehicle. Operation A3-5.

25. Refit front floor. Operation A3-4.

26. Refit the radiator and grille panel. Operation A3-3.

27. Refit the air cleaner. Operation A3-2.

28. Refit the bonnet panel. Operation A3-1.

## Crankshaft and main bearings, to check—Operation A3-35

*(For removal and refitting details, Operation A3-34 refers)*

Workshop hand tools:
Spanner sizes: $\frac{7}{16}$ in AF open end
$\frac{13}{16}$ in. AF socket
Screwdriver (medium), Screwdriver (small),
Feeler gauges

Special tools:
Torque wrench
Dial test indicator
Part No. 605238—'Plastigage' strip

### To overhaul

1. Inspect all components for damage and general condition.
2. The crankshaft journals should be closely inspected for wear or damage, and the crankpins also checked for ovality.
3. Check for general condition of main bearing cap locating dowels, dowel spigots and surrounding areas.

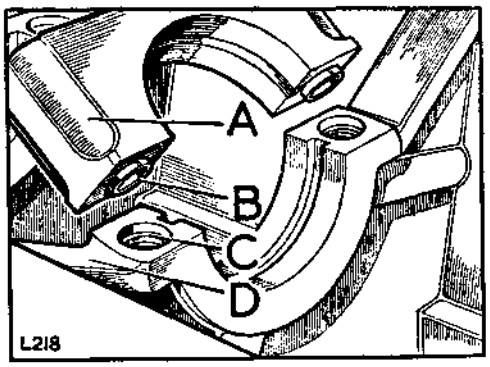


**A3-138. Main bearing cap location details**

A—Main bearing cap
B—Dowel spigots
C—Spigot locating bores
D—Cylinder block

4. With the crankshaft removed, check the main bearings for fit in the housings, as follows: fit the front bearing cap, less the shell bearings, to the correct location.
5. Fit and tighten the main bearing bolts to 75 lb ft (10,0 mkg).
6. Slacken one bolt and check that there is no clearance between the two faces. Clearance here indicates that the cap has been filed or is damaged and it will be necessary to replace the complete cylinder block.
7. If satisfactory, fit the main bearings and repeat the above check. The clearance at the face should now be .004 in. to .006 in. (0,10 mm to 0,15 mm) and is achieved by selective assembly of the shells.

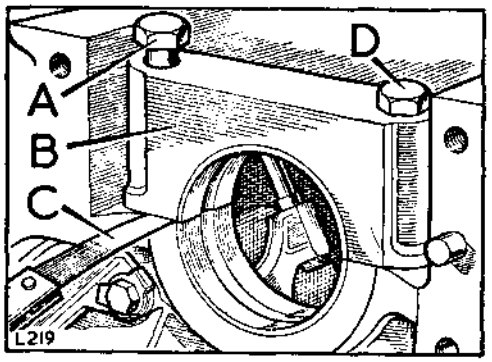


**Fig. A3-139. Checking main bearing nip**

A—Set bolt, slack
B—Bearing cap
C—Feeler gauge
D—Set bolt, tightened

8. Repeat the procedure and check the remaining bearings and caps.
9. When the bearing nip has been checked, remove the caps and bearing shell bottom halves. Position a standard size thrust washer at each side of rear bearing shell—top half, and fit the crankshaft.

   The thrust washer thicknesses must agree within .003 in. (0,08 mm).
10. Tighten the main bearing caps to 75 lb ft (10,0 mkg) torque load.
11. Mount a dial test indicator, then, using a suitable lever, check and note the crankshaft end-float reading which should be .002 in. to .006 in. (0,05 mm to 0,15 mm).

    If the crankshaft end-float reading obtained is not within the limits, fit suitable oversize thrust washers. The variation of thrust washer thickness at each side must not exceed .003 in. (0,08 mm) to ensure that the crankshaft remains centralised.

## Operation A3-35—*continued*

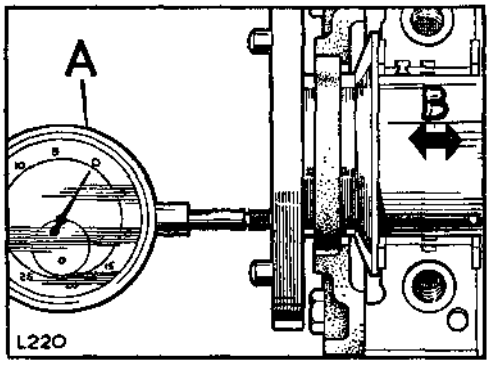


**Fig. A3-140. Checking crankshaft end-float**

A—Dial test indicator
B—Lever crankshaft fully forward then fully to rear

12. When satisfactory, check the crankshaft for freedom of rotation. Fitting a .0025 in. (0,06 mm) feeler paper between a main bearing and the journal should cause resistance to rotation; the crankshaft should be free to rotate by hand with the feeler paper removed.

13. The running clearance between the bearings and the crankshaft journals should be .0006 in. to .002 in. (0,015 mm to 0,05 mm). An alternative method of checking the clearance is by using 'Plastigage' strip, available under Rover Part No. 605238, as illustrated.

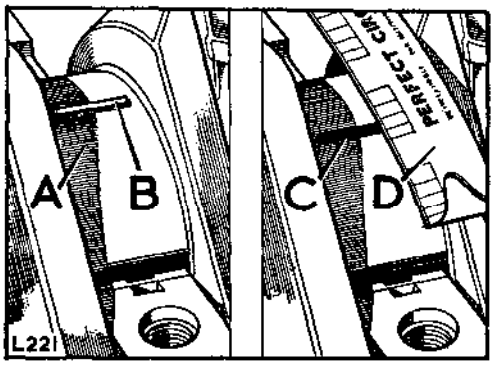


**Fig. A3-141. Use of 'Plastigage' strip to measure bearing clearance**

A—Main bearing journal
B—Initial position of 'Plastigage'
C—Flattened 'Plastigage', do not remove until measured against scale
D—Graduated scale on 'Plastigage' packet

## *Camshaft and bearings, remove and refit—Operation A3-36

Workshop hand tools:
Spanner sizes: $\frac{7}{16}$ in. AF, $\frac{1}{2}$ in. AF, $\frac{9}{16}$ in. AF open end
$\frac{3}{4}$ in. AF socket, $\frac{1}{8}$ in. Whit open end
$\frac{1}{8}$ in. (3 mm) Allen key
Screwdriver (medium), Pliers

Special tools:
Part No. 262749—Extractor for shafts
Part No. 530102—Spanner for starter dog
Dial test indicator and bracket
Part No. 507231—Extractor for chain wheel
Part No. 530101—Extractor for camshaft

**Note:** This operation includes removal of the camshaft bearings with the exception of the rearmost bearing, the cover for which can only be removed with the flywheel housing removed.

**To remove**

1. Remove the bonnet panel. Operation A3-1.
2. Remove the air cleaner. Operation A3-2.
3. Remove the radiator and grille panel. Operation A3-3.
4. Remove the exhaust manifold. Operation A3-8.
5. Remove the engine front cover. Operation A3-23.
6. Remove the timing chain tensioner. Operation A3-24.
7. Remove the camshaft chainwheel and timing chain. Operation A3-25.
8. Remove the camshaft thrust plate.
9. Remove the side rockers and shafts. Operation A3-26.

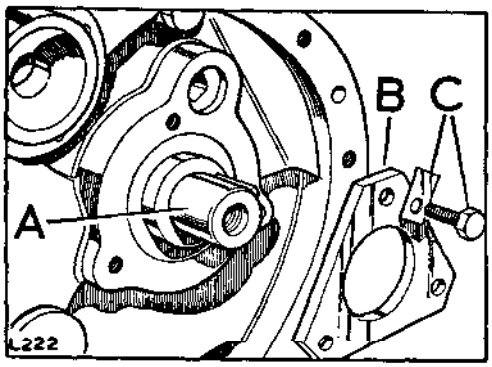


**Fig. A3-142. Thrust plate and fixings**

A—Camshaft
B—Thrust plate
C—Fixings

10. Remove the distributor and short drive shaft, Operation A3-18, and withdraw the vertical drive gear assembly.
11. Remove the camshaft bearings locating screws.
12. Withdraw the camshaft, using the special tool, Part No. 530101, until the bearings are clear of their housings.

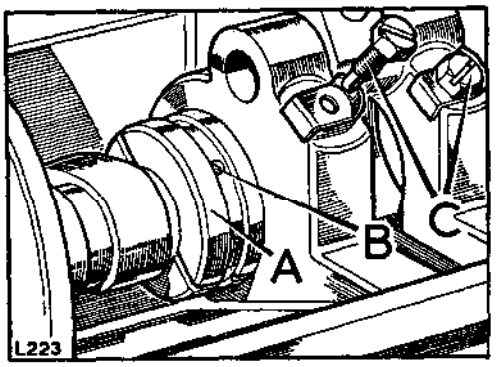


**Fig. A3-143. Camshaft bearing location**

A—Camshaft bearing (6 off)
B—Holes for locating screws
C—Locating screws

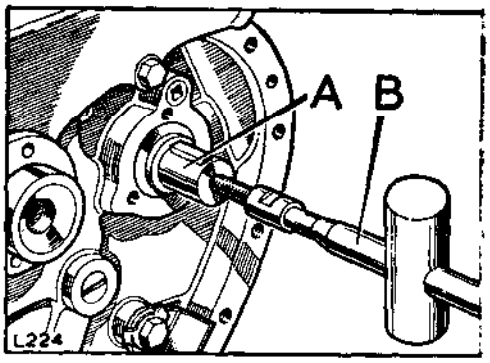


**Fig. A3-144. Extractor for camshaft**

A—Camshaft B—Extractor

*Operations marked with an asterisk (*) can be carried out with the engine installed in the vehicle*

## Operation A3-36—*continued*

13. Where two housings are close together, it will be advantageous to pass the rearmost bearing through both housings, before removal. The camshaft bearings are easily removed, being of the split type. With the bearings removed, pull the camshaft clear of the engine.
14. Keep the bearings in the correct pairs as indicated by the numbers stamped on the end face; these bearings are of soft material and care should be taken to avoid damage, should it be necessary to refit the originals.

### To refit

1. Before attempting to fit the camshaft bearings to the cylinder block, ensure that the bearing halves fit together correctly on the dowels by checking that no light is visible between the joint faces.
2. The bearings must be fitted dry and should be a hand push fit in the cylinder block; they must always be renewed in paired halves and the numbers stamped on one of the end faces of the bearing halves must be adjacent.

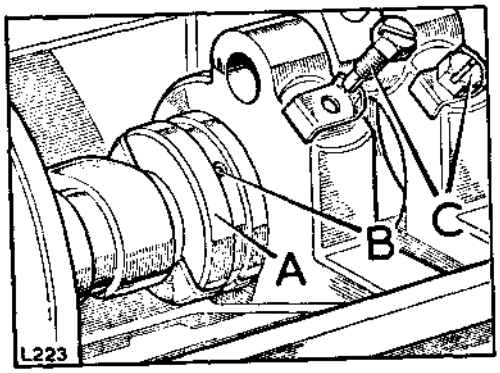


**Fig. A3-145. Camshaft bearing location**

A—Camshaft bearing
B—Locating screw hole
C—Locating screws and lockplates

3. When fitting the bearings to the camshaft housing, align the locating screw holes in the bearings with the corresponding holes in the housings.
4. Insert the camshaft partly into the cylinder block, allowing the distributor and oil pump drive gear to pass through the first and second intermediate housing webs. Assemble the bearings on to their respective journals on the camshaft. Ensure that the dowelled joint faces are tightly fitted together and the locating holes in the bearings are in line with the holes in the housing webs.

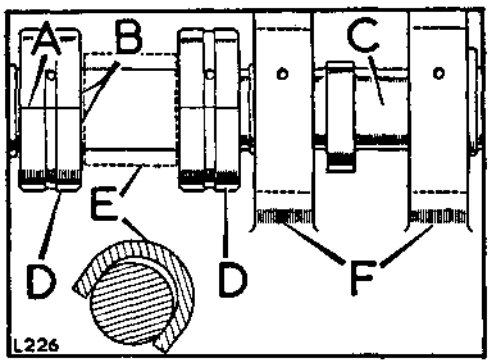


**Fig. A3-146. Camshaft fitting with distance piece**

A—No gap here when fitted
B—Faces with numbers to be adjacent
C—Camshaft
D—Bearings, intermediate
E—Distance piece
F—Bearing housings

5. Place a suitable distance piece (Fig. A3-146 refers) between the first and second intermediate bearings. The width of the distance piece to be approximately the distance between the bearing housings but allowing sufficient clearance for withdrawal.
6. With all the bearings in place and correctly aligned and using a plastic-faced mallet, gently tap the camshaft rearwards until the bearings are fully home in their respective housings and the locating holes are aligned. Remove the distance piece.
7. Before fitting the locating set bolts to the bearings and housings, squirt engine oil down the holes to lubricate the bearings. Fit the locating set bolts and spring washers.

## Operation A3-36—*continued*

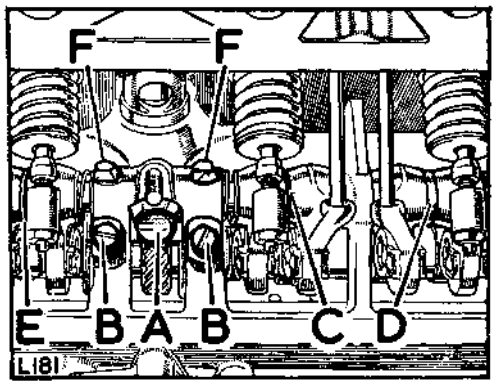


**Fig. A3-147. Camshaft and bearing refitting**

A—Oil feed locating bolt
B—Camshaft bearing locating screw
C—Spacing washer, thin
D—Spacing washer, thick
E—Spacing washer, medium
F—Rocker shaft locating screws

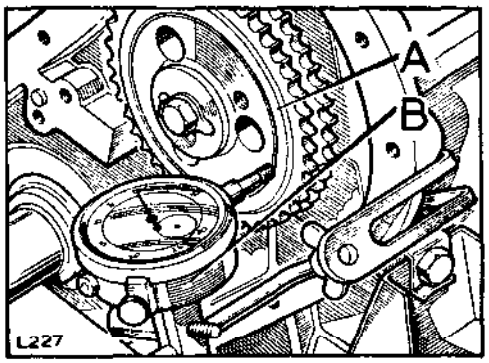


**Fig. A3-148. Camshaft end-float**

A—Camshaft chainwheel
B—Dial test indicator

8. Fit the camshaft thrust plate and camshaft hub, noting any alignment marks made previously. The camshaft should have .0045 to .0065 in. (0,11 to 0,16 mm) end-float measured between the hub and the thrust plate. A new thrust plate must be fitted where the end-float is in excess of these tolerances.
9. Temporarily remove the camshaft chainwheel and refit the side rocker shafts, Operation A3-26.
10. Fit the camshaft chainwheel and carry out the valve timing procedure, Operation A3-25.
11. Fit the timing chain tensioner, Operation A3-24.
12. Fit the engine front cover, Operation A3-23.
13. Fit the vertical drive gear assembly, Operation A3-28.
14. Fit the distributor, Operation A3-18.
15. Carry out Ignition timing procedure, Operation A3-17.
16. Reverse removal procedure for remaining items.
17. Fill radiator with coolant, anti-freeze in winter. Capacity: 20 Imperial pints (24 U.S. pints, 11,2 litres).
18. Run engine and check for oil and water leaks. Carry out any adjustments required.

## Cylinder block, to overhaul—Operation A3-37

Workshop hand tools:
Spanner sizes: $\frac{7}{16}$ in. AF, $\frac{1}{2}$ in. AF, $\frac{9}{16}$ in. AF
$\frac{5}{8}$ in. AF, $\frac{3}{4}$ in. AF
Screwdrivers, medium and large

Special tools:
Reboring jig block (Part No. 261288)
Cylinder liner press block (Part No. 246650)
Extractor (Part No. 262749)

Carry out the engine removal and dismantling work previously detailed as necessary until the cylinder block only remains

### Cylinder block, preparation

1. Clean out the main oil gallery and all oilways; renew all blanking plugs.
2. If necessary, remove the oil gallery pipe from the block by using extractor (Part No. 262749).
3. Clean out the water gallery and water jacket.

### Cylinder block, checks

1. Examine the block for cracks and distortion of machined faces.
2. The cylinder block must be checked by first assembling the crankshaft bearing caps (without the bearing shells) to the crankcase. Ensure correct location by means of the dowels. Bearing caps are numbered in their respective order from the front of the engine.
3. Tighten both securing bolts for each cap to 75 lb/ft 10,0 mkg). Slacken one bolt of each pair right off. There should be no clearance at the joint face. **If there is clearance, this indicates that the caps have been filed. The cylinder block is scrap and must be replaced.**
4. Check for stripped threads and general damage to cylinder block.
5. Measure the amount of wear in each cylinder bore.

### Reboring

1. Although the cylinder head is inclined at an angle of 22°, standard boring equipment can be used in conjunction with a special jig block (Part No. 261288).

### Cylinder liners

1. Cylinder liners may be fitted; note the following points:
   (a) Machine the cylinder block bores to 3.200 in. plus .001 in. (81,28 mm plus 0,025 mm). This gives an interference fit of .003 to .004 in. (0,07 to 0,10 mm).
   (b) Prior to pressing in the liner, allowance must be made for twist up to $\frac{3}{16}$ in. (5 mm) clockwise. To facilitate realignment should the liner not be positioned correctly at the first attempt, scribe lines down the sides of the liner from the two peaks, and make corresponding marks on the cylinder block.
   (c) Press in the liner, using a special press block (Part No. 246650), until the top edge is level with the bottom of the exhaust valve pocket. Blend to the shape of the cylinder block.

Bore to the selected diameter to suit pistons. Liners may only be bored to suit standard or .010 in. (0,25 mm) oversize pistons. For piston selection see Operation A3-33.

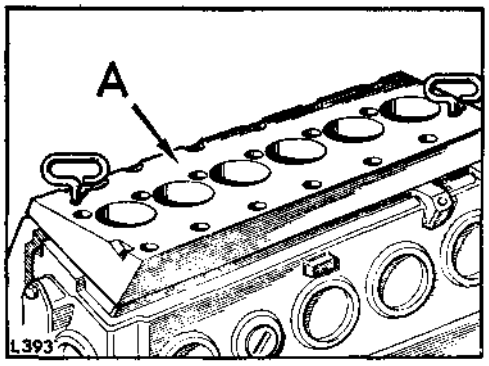


**Fig. A3-149. Jig block for reboring**
A—Jig block, Part No. 261288

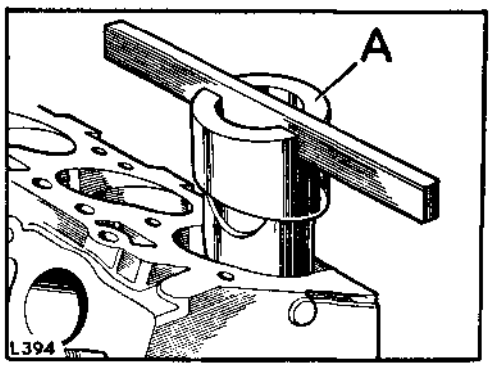


**Fig. A3-150. Fitting a cylinder liner**
A—Press block, Part No. 246650

# Reclamation of flywheel and starter ring—Operation A3-38

### Wear or scoring on the flywheel pressure face

1. Remove the clutch bolts and dowels from the flywheel.
2. Check the thickness of the flywheel before commencing machining, as it may have been previously machined.

   The maximum amount of metal which may be removed from the flywheel face is .030 in. (0,76 mm). If the face is not satisfactory after machining to these limits, the flywheel must be scrapped. See chart below.
3. Machine the **whole** pressure face, not merely inside the bolts and dowels, until the score marks are removed.

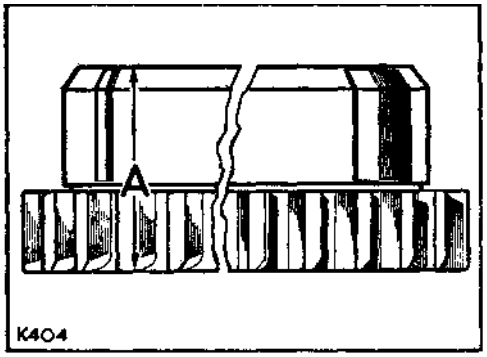


**Fig. A3-151. Machining flywheel**

A—Minimum thickness after refacing

### Starter ring excessively worn or damaged

**Petrol models**

1. Remove the scrap starter ring by securing the flywheel in a vice fitted with jaw protectors, then drill a $\frac{3}{16}$ in. (4 mm) diameter hole axially between the root of any one tooth and the inner diameter of the starter ring $\frac{3}{16}$ in. (4 mm) deep. Care must be taken to prevent the drill entering the flywheel.

   **Important Note:** The starter ring will normally split harmlessly but on remote occasions rings have been known to fly asunder when split; it is therefore important that the operator should take suitable precautions. For instance a cloth may be laid over the upper part of the starter ring.

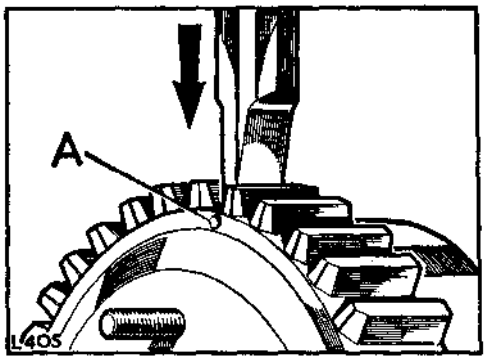


**Fig. A3-152. Removing an unserviceable starter ring**

A—Drilled hole

| Models | Flywheel Part Number | Ring Gear Part Number | Dimension 'A' Minimum thickness after refacing | Flywheel Part Number when re-conditioned | Remarks |
|---|---|---|---|---|---|
| 2.6 litre Petrol models .. .. | 541760 | 506799 | 1.204 in. (30,5 mm) | 600537 | Cast-iron flywheel. Detachable ring gear fitted as original equipment. No machining necessary other than for refacing. |

## Operation A3-38—*continued*

2. Place a chisel immediately above the drilled hole, and strike it sharply.

3. Heat the starter ring uniformly to between 220°C and 225°C but do not exceed the higher temperature.

4. With the flywheel placed on a suitably flat surface, position the ring on to the flywheel with the square edge of the teeth against the flange. There should be a clearance of $\frac{1}{16}$ in. to $\frac{1}{8}$ in. (1.5 mm to 3 mm) between the inner diameter of ring and flywheel if the temperature is correct. Press the starter ring firmly against the flange until the ring contracts sufficiently to grip the flywheel.

5. Allow the flywheel assembly to cool gradually; do not hasten cooling in any way and thereby avoid the setting up of internal stresses in the ring which may cause fracture or failure in some respect.

# Fault diagnosis—Engine—2.6 litre Petrol

| Symptom | Possible cause | Investigation | Remedy |
|---|---|---|---|
| **A—Engine fails to rotate when attempting to start** | Incorrect starting procedure | Follow procedure as described in Owner's Instruction Manual | |
| | Battery leads loose or terminals corroded | Check for condition of leads and terminals | Clean and tighten as necessary |
| | Battery discharged | Check and remedy as described in Section N | |
| | Starter motor inoperative | If lights dim when starter switch is operated, the starter pinion may be jammed in the flywheel starter ring | Free the starter by removing the protection cap and turning the squared end of the starter armature clockwise |
| | | Check for loose or dirty connections and for soundness of leads | Clean and tighten at terminals. Replace leads as necessary |
| | | Depress switch on engine compartment dash panel to connect battery feed to starter | If starter then rotates engine, replace the ignition switch. If starter remains inoperative, refer to Section N |
| **B—Engine rotates but fails to start** | Starter motor speed too low | Check battery leads at terminals | Clean and tighten as necessary |
| | | Check state of battery charge. Section N | When refitting a recharged or replacement battery, check the voltage regulator output setting, Section N. Check also the fan belt tension |
| | Faulty ignition system | Remove a sparking plug lead and hold lead end ¼ in. (6 mm) approximately from engine block. With ignition 'ON', depress starter solenoid switch and check that an easily visible blue spark jumps the gap between plug lead and engine | If no spark or if spark is weak or yellowish, check the ignition system as described in Section N |
| | | If the spark appears adequate, remove the sparking plugs | Clean the plugs and reset the plug gaps, Section N. Replace if necessary |
| | Fuel system defects | With the engine cold, remove fuel inlet pipe at carburetter, operate priming lever at pump and check for full bore fuel flow | If fuel flow is unsatisfactory refer to Section L |
| | | If flow is satisfactory, ensure that carburetter float chamber fuel level is satisfactory | If float chamber level is too low, refer to Section L for carburetter float needle checks |
| **C—Engine starts but immediately stops** | Faulty electrical connections | Check ignition circuits leads and terminals for possible loose or defective connections, as described in Section N | |
| | Insufficient fuel supply | Carry out the checks and remedies listed under 'Fuel system defects', paragraph B | |
| **D—Engine fails to idle** | Carburetter setting faulty | Adjust throttle stop screw on carburetter until engine will run with lever on stop. If engine idle speed is then too high, check the carburetter settings as described in Section L | |

## Fault diagnosis—Engine—2.6 litre Petrol—*continued*

| Symptom | Possible cause | Investigation | Remedy |
|---|---|---|---|
| **D—Engine fails to idle**—cont. | Faulty fuel pump | Carry out the checks and remedies listed under 'Fuel system defects', paragraph B | |
| | Ignition system faults | Check electrical leads insulation and terminal connections | Clean and tighten terminals. Replace leads if necessary |
| | | Carry out the checks listed under 'Faulty ignition system', paragraph B, to check the sparking plugs and their electrical feed | |
| | Battery charge too low | Check if lamps brightness varies with engine speed | Carry out the checks listed under 'Battery discharged', 'charge low'. Section N |
| | | Check fan belt tension setting | Reset to correct tension and recharge battery from external supply or by a long period of engine running in daylight |
| | Incorrect ignition timing | Adjust throttle stop screw on carburetter until engine will idle without stopping. Rotate vernier adjuster on distributor through advance and retard range. If the engine speed increases at a new vernier position, then the original ignition setting is incorrect for the fuel grade in use | Reset ignition timing to the correct setting for the fuel grade in use |
| | Valve operation defective | Remove engine top cover and check tappet clearances | Reset clearances |
| | | Check for defective valve springs | Replace as pairs |
| | | Rotate engine, using starting handle, and check for valves sticking open | Carry out engine decarbonise and top overhaul procedure |
| | | Check for worn valves and valve guides | Replace as necessary |
| | Faulty cylinder head gasket | Check for leaks across sealing areas | Replace gasket |
| | Exhaust system faulty | Examine for possible restrictions | Remove restriction. Replace components as necessary |
| **E—Engine misfires on acceleration** | Distributor operation faulty | Check condition of contact breaker points. Check gap: .014 in. to .016 in. (0,35 mm to 0,40 mm) | Reface points and reset gap or replace points if badly worn or pitted |
| | Coil or condenser faulty | Check by substituting serviceable components | Replace unserviceable components |
| | Sparking plugs faulty | Remove sparking plugs, check for carbon deposits. Check electrode gap. Visually examine for signs of cracked insulation | If sparking plugs appear otherwise serviceable, clean off all deposits and reset the gap to .029 to .032 in. (0,75 to 0,8 mm.) |
| | Carburetter operation faulty | Check for restrictions in carburetter fuel passages | Clean out passages as described in Section L |

## Fault diagnosis—Engine—2.6 litre Petrol—*continued*

| Symptom | Possible cause | Investigation | Remedy |
|---|---|---|---|
| **E—Engine misfires on acceleration**—cont. | Carburetter operation faulty—cont. | Check carburetter accelerator pump diaphragm and linkage, where applicable. Check carburetter control settings | Check carburetter as described in Section L |
| **F—Engine backfires** | Air leakage | Check exhaust system and ensure joints are sound; check components for damage and cracks | Tighten joints or replace components as necessary, Section M |
| | Internal leakage | Excessively worn valve guides and valves may allow crankcase fumes to enter exhaust system | Carry out cylinder head overhaul procedure |
| | Ignition system defect | Check electrical leads, insulation and terminal connections | Clean and tighten terminals. Replace leads if necessary |
| | | Check condition of sparking plugs, insulation and electrode gap | Reset or replace as necessary, Section N |
| | | Check if ignition timing setting is too retarded | Reset timing |
| | Carburetter defect | Check jets for any restriction which may cause a too weak mixture. Check mixture control setting | Check carburetter settings and clean out passages if necessary, Section L |
| | Valve operation incorrect | Check valve timing, Section A1 | Reset timing if necessary. Ensure that timing chain tensioner is free to operate, ensure that timing chain has no slack on driving side |
| | | Check tappet clearances | Reset clearances |
| | | Check for valves sticking open | Carry out engine decarbonise procedure |
| | | Check for badly seating valves | Carry out cylinder head overhaul procedure |
| **G—Engine knocks** | Ignition system defects | Check condition of sparking plugs | Reset or replace as necessary, Section N |
| | | Check if ignition timing is too advanced | Reset ignition timing to the correct setting for the fuel grade in use |
| | | Check operation of distributor advance and retard mechanism, Section N | |
| | Fuel system defects | Check setting of mixture control screw | Reset control screw as described in Section L |
| | | Check grade of fuel in use is suitable | Rotate octane selector on distributor. If engine knock stops, fuel in use is not correct for the ignition timing setting |

## Fault diagnosis—Engine—2.6 litre Petrol—*continued*

| Symptom | Possible cause | Investigation | Remedy |
|---|---|---|---|
| **G—Engine knocks—cont.** | Valves operation incorrect | Check tappet clearances | Reset clearances |
| | | Check valve timing | Reset timing |
| | Wear in engine | Check pistons and bearings | Overhaul as necessary |
| | Excessive carbon deposits | Remove cylinder head and check for deposits in combustion chamber areas | Remove carbon deposits |
| **H—Engine 'spits back' through carburetter** | Excessively weak mixture | Check setting of mixture control screw | Adjust control screw as detailed in Section L |
| | | Check for air leakage into fuel induction system | Tighten fixings or replace components as necessary |
| **J—Engine runs erratically** | Ignition timing incorrect | With engine running, rotate vernier adjuster at distributor through advance and retard range. If engine runs smoothly at a new position, then the original ignition timing is incorrect for the fuel grade in use | Reset ignition timing to the correct setting for the fuel in use |
| | Fuel system defect | Check for restriction in fuel supply and for fuel pump malfunction. Section L | |
| | Electrical system defects | Check for faulty electrical connections | Clean and tighten at terminals. Replace leads if insulation is not sound |
| | | Check condition of sparking plugs | Clean and reset electrode gap. Replace plugs as necessary, Section N |
| | | Check battery connections and state of battery charge | Clean and tighten connections. Recharge battery if necessary, Section N |
| | | Check that vacuum pipe connection at distributor is sound | Rectify as necessary |
| | | Check distributor operation as described in Section N | |
| | Valves operation incorrect | Check tappet clearances | Reset clearances |
| | | Check for valves sticking open. Check also for broken or defective valve spings | Carry out cylinder head overhaul procedure |
| | | Remove cylinder head and check for worn valves and valve guides. Examine cylinder head gasket for signs of leakage across the sealing areas | Carry out the cylinder head overhaul procedure |
| | Exhaust system defects | Check for damage, cracks and ensure joints are tight | Rectify or replace components as necessary. Section M |
| **K—Lack of power** | Ignition system defect | Check condition of sparking plugs, insulation and electrode gap | Clean and reset electrode gap. Replace plugs if otherwise faulty |
| | | Check distributor advance and retard mechanism as detailed in Section N | |

## Fault diagnosis—Engine—2.6 litre Petrol—*continued*

| Symptom | Possible cause | Investigation | Remedy |
|---|---|---|---|
| **K—Lack of power**—cont. | Ignition system defect—cont. | Check for faulty coil, condenser or battery by substituting serviceable components | Replace as necessary, referring to Section N |
| | | Check ignition timing | Reset timing |
| | Poor engine compression | If the compression pressure is appreciably less than the figure quoted in the 'Data' section, the piston rings may be worn or the valve seating poor | Carry out the applicable overhaul procedures |
| | Clutch slip | If vehicle road speed does not respond adequately to engine speed increases during normal travel, clutch slip may be taking place | Carry out the fault diagnosis procedure described in Section B |
| | Fuel system defect | Check fuel system for external leakage. Check fuel tank filler breather is clear. Check for restrictions in fuel system, indicated by low fuel level in float chamber | Rectify as described in Section L |
| | Exhaust system faulty | Check for damage, holes and cracks | Replace components as necessary, Section M |
| | Brakes 'binding' | Check as detailed in Section H | |
| **L—Engine stalls** | Fuel system defects | Check the carburetter control screw settings. Ensure throttle stop and mixture settings are correct | Reset as necessary, Section L |
| | | Check for restriction or foreign matter in fuel system | Rectify as detailed in Section L |
| | Ignition system defects | Check distributor contact breaker points and gap setting | Clean points and reset gap. Replace points as necessary, Section N |
| | | Check condition of sparking plugs electrode gap and also examine insulation | Clean plugs and reset gaps as necessary, Section N. Replace plugs as necessary |
| | | Check operation of ignition coil and distributor condenser by substituting serviceable components | Replace as necessary, Section N |
| | Valve operation faulty | Check tappet clearances | Reset as necessary |
| **M—Noisy valve mechanism** | Valve operation incorrect | Check for excessive tappet clearances | Reset clearances |
| | | Rotate engine and check for sticking valves and broken or defective valve springs. Check for excessively worn components | Carry out cylinder head overhaul procedure. Replace valve springs |
| **N—Main bearing rattle** | Low oil pressure | Refer to paragraph P for checks and remedy | |
| | Component or assembly defects | Check if main bearing cap fixings are loose | Tighten to correct torque loading |
| | | Check bearing clearance. Examine bearings and crankshaft for wear. | Carry out the overhaul procedure |

## Fault diagnosis—Engine—2.6 litre Petrol—*continued*

| Symptom | Possible cause | Investigation | Remedy |
|---|---|---|---|
| **P—Low oil pressure** | Insufficient oil supply | Check engine dipstick | Replenish sump with correct grade lubricating oil, Section X refers |
| | External leakage | Check engine for oil leaks. Ensure oil pressure switch joint washer is sound | Rectify as necessary |
| | Oil pump operation faulty | Check the oil pump intake filter for restriction | Remove foreign matter if necessary. Clean filter in clean fuel |
| | | Check for wear in pump gears assembly | Carry out the oil pump overhaul procedure |
| | Oil pressure relief valve malfunction | Check for foreign matter on ball valve seat | Clean and refit |
| | | Relief valve plunger sticking | Clean and ensure smooth operation before refitting |
| | | Check that oil pump body joint fixings are tight | Tighten fixings |
| | | Relief valve spring weak. Check by substitution of serviceable spring | Replace spring |
| | Excessively worn bearings | Check bearing clearances at main journals, connecting rod big ends and camshaft as necessary | Replace the bearings, referring to the appropriate overhaul procedure |
| **Q—Oil pressure warning light remains 'ON', with engine running** | Low oil pressure | Refer to paragraph P for checks and remedy | |
| | Oil pressure switch unserviceable | Check by substitution of serviceable component | Replace switch |
| | Electrical fault | Check circuit | Rectify poor connections or replace leads as applicable |
| **R—Warning light fails to glow with engine stopped and ignition switch 'ON'** | | Check warning lamp bulb by substitution of serviceable bulb | Replace bulb |
| | | Check oil pressure switch by substitution of a serviceable switch | Replace switch |
| | | Check electrical circuit | Rectify poor connections or replace leads as applicable |

## GENERAL DATA

| | |
|---|---|
| Capacity (piston displacement) | 2625 cc (160.3 cu in.) |
| Number of cylinders | 6 |
| Bore | 3.063 in. (77,8 mm) |
| Stroke | 3.625 in. (92,075 mm) |
| Compression ratio | 7:1 or 7.8:1 |
| BHP at 4,500 rpm | 90 95 |
| BMEP at 1,750 rpm | 7:1 122 lb sq in. (8,57 kg cm²)<br>7.8:1 127 lb sq in. (8,92 kg cm²) |
| Maximum torque | 7:1 132 lb ft (18 mkg) at 1,500 rpm<br>7.8:1 134 lb ft (18,5 mkg) at 1,750 rpm |
| Firing order | 1—5—3—6—2—4 |
| Piston speed at 4,500 rpm | 2,719 ft/min (826 m/min) |
| Compression pressure (at starter motor cranking speed, with engine hot) | 7:1 140 lb sq in. (9,84 kg cm²)<br>7.8:1 170 to 175 lb sq in (11,95 to 12,3 kg cm²) |

## DETAIL DATA

### Camshaft

| | |
|---|---|
| Journal diameter | .999 in. (25,38 mm) |
| Clearance in bearing | .001 to .0025 in. (0,02 to 0,06 mm) |
| End-float | .0045 to .0065 in. (0,114 to 0,165 mm) |
| Cam lift—inlet | .374 in. (9,5 mm) |
| Cam lift—exhaust | .403 in. (10,2 mm) |

### Camshaft bearings

| | |
|---|---|
| Type | Split Mazac. Six off |
| Internal diameter (line-reamed in position) | 1.0 in. (25,4 mm) |

### Connecting rods

| | |
|---|---|
| Bearing fit on crankpin | .001 to .002 in. (0,025 to 0,05 mm) |
| Bearing nip | .002 to .004 in. (0,05 to 0,10 mm) |
| End-float at big-end | .006 to .015 in. (0,15 to 0,38 mm) |
| Gudgeon pin bush, fit in small-end | .001 to .003 in. (0,02 to 0,76 mm) interference |
| Gudgeon pin bush internal diameter—reamed in position | .8755 in.—.0005 in. (22,24 mm—0,0127 mm) |
| Fit of gudgeon pin in bush | .0002 in. to .0006 in. (0,005 mm to 0,015 mm) clearance |

### Crankshaft

| | |
|---|---|
| Journal diameter | 2.6245 in.—.0005 in. (67,0 mm—0,0127 mm) |
| Crankpin diameter | 1.875 in.+.00075 in. (47,63 mm+0,018 mm) |
| End-float (controlled by thrust washers at rear main bearing) | .002 in. to .006 in. (0,05 mm to 0,15 mm) |
| Regrind permissible by .010 in. (0,254 mm) stages to | Journal dia. 2.584 in. (65,63 mm) Crankpin dia. 1.835 in. (46,6 mm) |

### Flywheel

| | |
|---|---|
| Number of teeth | 97 |
| Thickness | 1.250 in. to 1.226 in. (31,75 mm to 31,14 mm) |
| Maximum permissible run-out on flywheel face | .002 in. (0,05 mm) |
| Primary pinion bush—fit in flywheel | .001 in. to .003 in. (0,02 mm to 0,07 mm) |
| Internal diameter—reamed in position | .878 in. +.0005 in. (22,3 mm +0,013 mm) |
| Fit of shaft in bush | .001 in. to .003 in. (0,025 mm to 0,076 mm) |
| Maximum refacing depth | .030 in. (0,76 mm) |
| Minimum overall thickness after grinding | 1.204 in (30,5 mm) |

### Engine timing markings

| | |
|---|---|
| Early engines | Timing marks and pointer at flywheel |
| Later engines | Valve timing marks at timing chain wheels<br>Ignition timing marks on crankshaft pulley, timing pointer at engine front cover |
| TDC for 7:1 engines using 80 octane fuel | When opposite pointer, No. 1 piston is at top dead centre |
| 6° BTDC for 8.8:1 engines using 95 octane fuel<br>2° BTDC for 7:1 engines using 83 octane fuel<br>2°ATDC for 7:1 engines using 78 octane fuel and 7.8:1 engines using 90 octane fuel | When opposite pointer, indicates firing point of No. 1 cylinder when both valves are closed |
| EP | Exhaust peak. Align with pointer to set engine for valve timing |

### Gudgeon pin

| | |
|---|---|
| Fit in piston | Push fit with piston warmed to 60°F (15°C) |
| Fit in connecting rod bush | .0002 in. to .0006 in. (0,005 mm to 0,015 mm) clearance |

### Main bearings

| | |
|---|---|
| Clearances on crankshaft journal | .0006 in. to .002 in. (0,015 mm to 0,05 mm) |
| Bearing nip | .004 in. to .006 in. (0,10 mm to 0,15 mm) |

### Pistons

| | |
|---|---|
| Type | Aluminium alloy, tin plated; pent roof type |
| Clearance in bore, measured at bottom of skirt at right angles to gudgeon pin | .002 in. to .0025 in. (0,05 mm to 0,062 mm) |
| Clearance in bore, measured at top of skirt at right angles to gudgeon pin | .003 in. to .0035 in. (0,08 mm to 0,089 mm) |

### Piston rings

| | |
|---|---|
| Compression (2) | |
| Type | Taper periphery |
| Gap in bore | .015 in. to .020 in. (0,38 mm to 0,50 mm) |
| Clearance in groove | .0018 in. to .0038 in. (0,046 mm to 0,097 mm) |
| Scraper | |
| Type | Duaflex 61 |
| Gap in bore | .015 in. to .033 in. (0,38 mm to 0,83 mm) |
| Clearance in groove | .002 in. to .004 in. (0,05 mm to 0,10 mm) |

**Tappet clearance**

| | |
|---|---|
| Exhaust valves | .010 in. (0,25 mm) hot or cold |
| Inlet valves | .006 in. (0,15 mm) with engine at running temperature |

**Timing chain**

| | |
|---|---|
| Chain type | Duplex pre-stretched endless |
| Pitch | .375 in. (9,52 mm) |
| Chain tensioner | Hydraulic self-adjusting (Renolds type SCD) |

**Thrust bearings, crankshaft**

| | |
|---|---|
| Type | Semi-circular, steel back, tin plated on friction surface |
| Standard size, total thickness | .093 in.—.002 in. (2,362 mm—0,05 mm) |
| Oversizes | .0025 in. (0,06 mm); .005 in. (0,12 mm); .0075 in. (0,18 mm); .010 in. (0,25 mm); .0125 in. (0,316 mm) |

**Valves**

| | |
|---|---|
| Inlet valve | |
| Diameter (stem) | .3425 in.—.0005 in. (8,6995 mm—0,0127 mm) |
| Face angle | 30°—¼ |
| Exhaust valve | |
| Diameter (stem) | .3425 in.—.0005 in. (8,6995 mm—0,0127 mm) |
| Face angle | 45°—¼ |
| Fit of inlet valves in guide | .0013 in. to .003 in. (0,033 mm to 0,07 mm) |
| Fit of exhaust valves in guide | .0013 in. to .003 in. (0,033 mm to 0,07 mm) |

**Valve seat inserts**

| | |
|---|---|
| Fit of inlet seat insert in cylinder head | .0034 in. to .0045 in. (0,086 mm to 0,114 mm) interference |
| Fit of exhaust seat insert in cylinder block | .0034 in. to .007 in. (0,086 mm to 0,178 mm) interference |
| Seat angle—inlet | 30° |
| Seat angle—exhaust | 45° |
| Seat mean diameter—inlet | 1.2645 in. (32 mm) |
| Seat mean diameter—exhaust | 1.7415 in. (44 mm) |

### Valve springs

| | |
|---|---|
| Inlet | |
| Inner | |
| Length—free | 1.703 in. (43,26 mm) |
| Outer | |
| Length—free | 1.960 in. (49,8 mm) |
| Exhaust | |
| Inner | |
| Length—free | 1.703 in. (43,26 mm) |
| Outer | |
| Length—free | 1.861 in. (47,26 mm) |

### Valve guides

| | |
|---|---|
| Bore size, after fitting | .3455 in.—.0022 in. (8,7757 mm—0,056 mm) |
| Oil seal | 'O' ring fitted in internal groove |
| Guide length | |
| Inlet | 1.5 in. (38,10 mm) |
| Exhaust | 2.25 in. (57,15 mm) |
| Fit in cylinder head/block | |
| Inlet | .0024 in. to .0035 in. (0,06 mm to 0,09 mm) |
| Exhaust | .0014 in. to .0025 in. (0,035 mm to 0,063 mm) |

### Valve timing

| | |
|---|---|
| Inlet opens | 12° BTDC |
| Inlet closes | 46° ABDC |
| Duration | 238° |
| Exhaust opens | 47° BBDC |
| Exhaust closes | 17° ATDC |
| Duration | 244° |

### Oil pump

| | |
|---|---|
| Type | Spur gear |
| Drive | Splined shaft from camshaft skew gear |
| End-float of gears: | |
| Steel gear | .002 in. (0,05 mm) to .005 in. (0,12 mm) |
| Aluminium gear | .003 in. (0,07 mm) to .006 in. (0,15 mm) |
| Radial clearance of gears | .001 in. to .004 in. (0,02 mm to 0,102 mm) |
| Backlash of gears | .008 in. to .012 in. (0,20 mm to 0,28 mm) |

### Oil pressure, engine warm

| | |
|---|---|
| At 2,000 rpm | 40 to 50 lb/sq in. (3,16 to 4,57 kg cm$^2$) |

### Oil pressure relief valve

| | |
|---|---|
| Type | Non-adjustable |
| Relief valve spring: | |
| Free length | 3.425 in. (87,0 mm) |
| Compressed length at 17.5 lb (7,9 kg) load | 1.990 in. (50,55 mm) |

# SECTION B—CLUTCH UNITS

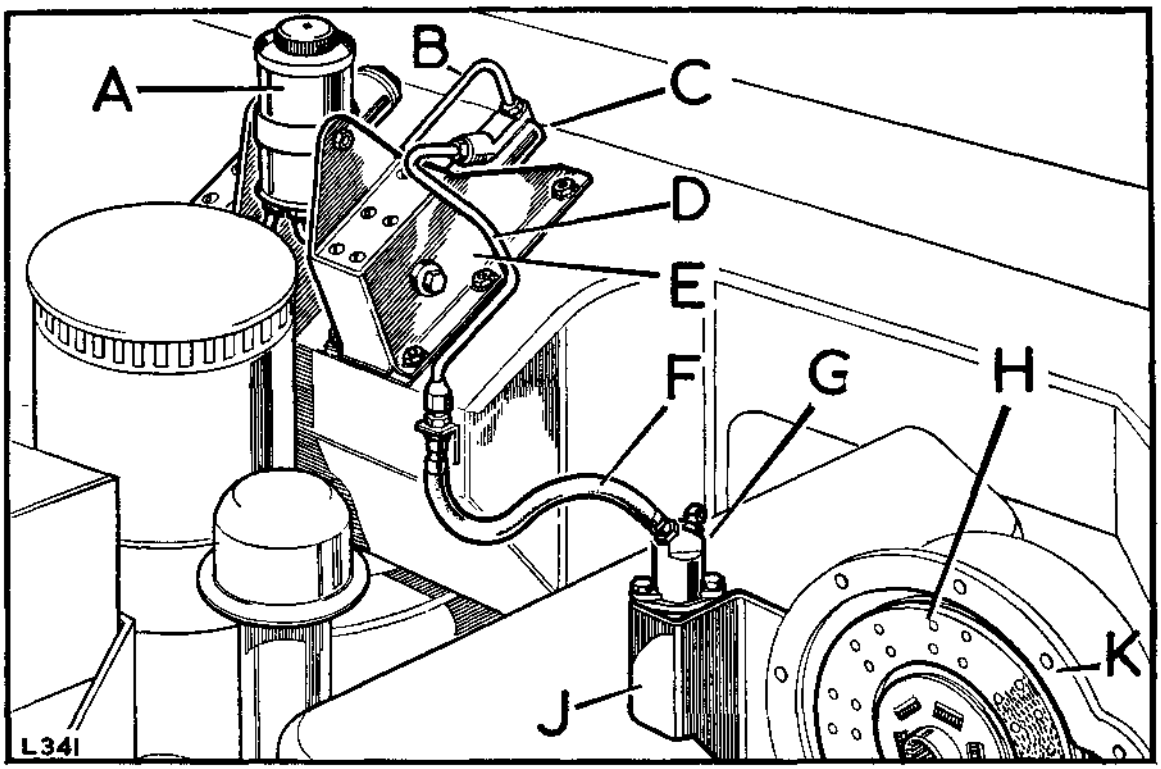


**Fig. B1-1. Layout of clutch system**

A—Hydraulic fluid reservoir (where fitted separate from master cylinder
B—Fluid inlet pipe from reservoir
C—Master cylinder
D—Fluid outlet pipe
E—Clutch pedal bracket
F—Flexible hose
G—Slave cylinder
H—Clutch assembly
J—Slave cylinder bracket
K—Bell housing

### Brief description of clutch system and operation

A Borg and Beck single dry plate clutch with hydraulically operated control mechanism is used.

Two types of clutch unit are in use, either a 9½ in. diameter diaphragm type, or a 9 in. coil spring type.

The hydraulic operating mechanism consists of a ¾ in. (19 mm) bore master cylinder which is mechanically attached directly to the clutch pedal and is connected by hydraulic piping to the slave cylinder.

The hydraulic fluid reservoir may be integral with the master cylinder or mounted separately.

A mechanical linkage connects the slave cylinder to the clutch withdrawal unit which utilises a thrust ball race. The withdrawal unit housing is attached to the gearbox and is automatically lubricated by gearbox oil.

**Take precautions to keep all components scrupulously clean when carrying out any work on the hydraulic system.**

**Use only the recommended hydraulic fluid as specified in Section X.**

# INDEX—CLUTCH UNITS

**Note:** A comprehensive, detailed index is included at the end of this manual


| Description | Operation Number | |
|---|---|---|
| | Remove/Refit | Overhaul |
| Clutch assembly and flywheel | Section A | B–1 |
| *Clutch withdrawal race housing | B–2 | B–2 |
| Clutch slave cylinder assembly | B–3 | B–4 |
| Clutch master cylinder | B–5 | B–6 |
| Clutch pedal, bracket and reservoir | B–7 | — |
| Bleeding the hydraulic system | B–8 | — |
| Clutch linkage and pedal, to adjust | B–9 | — |


*This heading and operation number is for reference purposes only. The relevant information is provided in Section C—Gearbox.

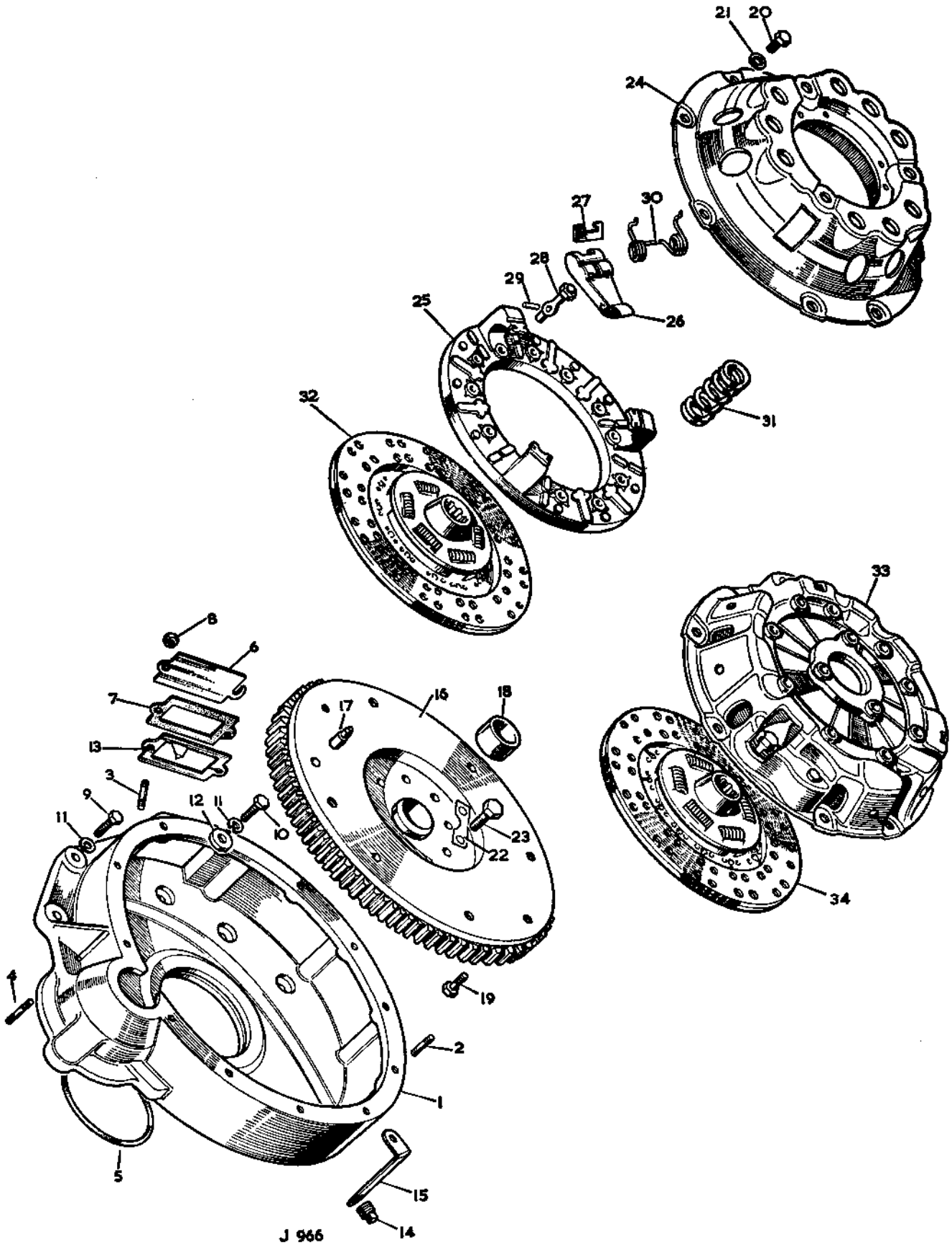


J 966

Fig. B1-2. Early and late type clutch assemblies

**Key to Fig. B1-2. Early and late type clutch assemblies**

1 Flywheel housing
2 Stud fixing flywheel housing to bell housing
3 Stud fixing inspection cover
4 Stud for starter motor
5 Sealing ring for flywheel housing
6 Inspection cover plate (early type engines)
7 Joint washer for cover plate
8 Nut fixing cover plate
9 Bolt
10 Bolt
11 Spring washer
12 Plain washer
(9–12: Fixing flywheel housing to cylinder block)
13 Indicator for engine timing (early type engines)
14 Drain plug for housing
15 Stowage bracket for drain plug. On later engines the plug is stowed in a blind tapping in the flywheel housing
16 Flywheel assembly
17 Dowel locating clutch cover plate
18 Bush for primary pinion
19 Special fitting bolt fixing clutch cover plate, applicable to certain models only. See Parts Catalogue
20 Set bolt
21 Spring washer
(20–21: Fixing clutch cover plate)
22 Locker
23 Special set bolt
(22–23: Fixing flywheel to crankshaft)
24 Cover plate for coil spring type clutch
25 Pressure plate
26 Release lever
27 Strut for release lever
28 Eyebolt and nut for release lever
29 Pin for release lever
30 Anti-rattle spring for release lever
31 Clutch coil spring (9 off)
32 Clutch driven plate
33 Diaphragm spring type clutch, fitted to 2.6 litre engines and later 2¼ litre Diesel engines. Optional equipment on 2¼ litre petrol engines.
34 Clutch driven plate

## Clutch unit and flywheel, to overhaul—Operation B1-1

*(For removing and refitting details, Section A refers)*

Workshop hand tools:

Spanner sizes: $\frac{11}{16}$ in. AF socket
Screwdriver (medium)

Special tools:

Socket wrench, Part No. 530103 clutch setting gauge, suitable press and wooden support blocks, suitable rivetting tool and $\frac{5}{32}$ in. (4 mm) twist drill as required

### COIL SPRING TYPE CLUTCH

#### Clutch unit, to dismantle

1. Suitably mark the cover plate, pressure plate lugs and release levers, so that they may be assembled in the same relative position in order to retain the original balance.
2. Place the cover assembly under a press with the pressure plate resting on wooden blocks, so arranged that the cover can move downwards when pressure is applied. Place a block of wood across the top of the cover, resting on the spring bosses.
3. Press the cover downwards and remove the three release lever adjusting nuts; slowly release the pressure to prevent the clutch springs from flying out.
4. Lift off the cover and withdraw the clutch springs.

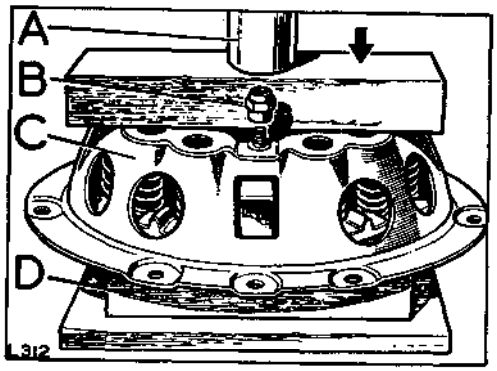


**Fig. B1-3. Removing clutch cover plate**

A—Suitable press
B—Release lever adjusting nuts
C—Clutch cover
D—Support blocks

5. Remove each release lever by holding the lever and eyebolt between fingers and thumb, so that the inner end of the lever and the threaded end of the eyebolt are as near together as possible, keeping the release lever pin in position in the lever. Lift the strut over the ridge on the lever and remove the eyebolt and release lever from the pressure plate.
6. Withdraw the anti-rattle springs from the clutch cover.

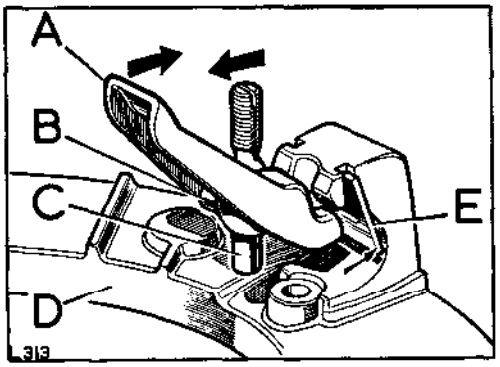


**Fig. B1-4. Release levers removal**

A—Release lever
B—Release lever pin
C—Eyebolt
D—Pressure plate
E—Strut

#### Inspection

1. **Pressure plate**

Examine the pressure plate for signs of scoring or burning, and regrind if necessary. Refer to the Data pages for dimensions. The thickness of the plate is measured from the pressure face to the underside of the operating lugs, as illustrated

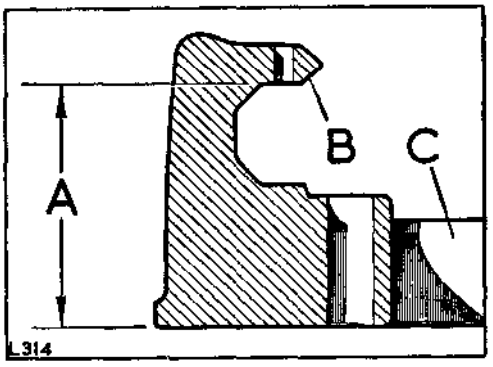


**Fig. B1-5. Checking pressure plate dimension**

A—Thickness dimension measured here
B—Pressure plate lug
C—Pressure plate

## Operation B1-1—*continued*

Discard the plate if it still shows signs of wear after grinding. Serious shortening of the effective life of the clutch unit will result if the limit for regrinding is exceeded.

The thickness of the pressure plate must always be measured from the underside of the same operating lug and the amount skimmed off the plate stamped on the side of the lug in question.

**2. Flywheel**

(a) If the flywheel is excessively worn it must be renewed or refaced. The refacing procedure is detailed in Section A.

(b) Replace the primary pinion bush in the flywheel, if necessary, and ream to .878 in. +.0005 in. (22,30 mm+0,0127 mm) when fitted. If time allows, soak the replacement bush in clean engine oil for 24 hours before fitting.

**Clutch driven plate**

1. Examine the clutch driven plate for wear and signs of oil contamination. Examine all rivets for pulling and distortion, the friction lining rivets must be below the friction surface. If oil contamination is present on the friction linings or if they are appreciably worn, replace the clutch driven plate assembly complete or alternatively, replace the friction linings as follows:

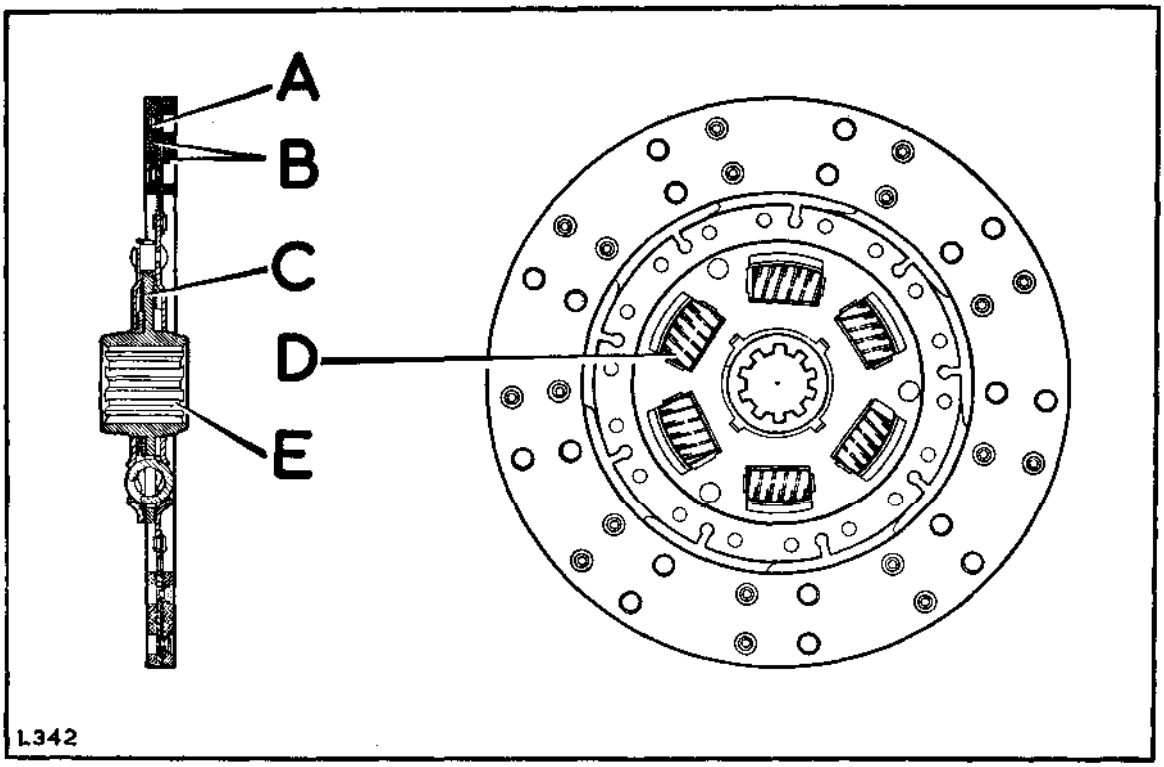


**Fig. B1-6. Clutch driven plate**

A—Securing rivets (38 off) Rivet heads to be below friction surface
B—Friction linings
C—Examine centre plate and segments for cracks and distortion
D—Visually check damper springs for damage and soundness
E—Examine splines for damage and wear

## Operation B1-1—*continued*

**Driven plate, to reline**

(a) Drill out the retaining rivets, using a $\frac{5}{32}$ in. (4 mm) drill inserted through the clearance hole in the opposite lining; each rivet attaches one facing only. The rivets must not be punched out, as serious deformation of the plate would thereby result.

(b) Thoroughly examine the segments for cracks; renew as necessary.

(c) Place one facing in position with the countersunk holes coinciding with the ones located on the crown or longer side of each segment.

(d) Insert the rivets with their heads in the countersunk holes of the facing and roll the shanks over securely against the segments. If a rolling tool is not available, a blunt-ended centre punch will prove satisfactory.

(e) Secure the second facing on the opposite side of the plate in a similar manner, matching the countersunk holes with the remaining holes in the segments. The rivet heads should always face outwards.

(f) Mount the plate on a suitable mandrel between centres and check for run-out as near the edge as possible; if the error is more than .010 in. (0,25 mm), press over the high spots until the plate is true within this figure.

**Clutch springs**

Check the clutch springs in accordance with the data given at the end of this Section and renew as necessary.

**To rebuild**

1. A very slight smear of high melting-point grease should be applied to the following parts during assembly:
   Release lever pins, contact faces of struts, eyebolt seats in cover, drive lug sides on the pressure plate and the plain end of the eyebolts.
2. Fit the lever pin to the release lever eyebolt.
3. Fit the eyebolt and pin into the release lever.
4. Hold the threaded end of the eyebolt and the inner end of the lever as close together as possible.
5. Fit the release lever strut to the release lever lug on the pressure plate and swivel the lower edge away from the eyebolt locating hole in the pressure plate. Hold the strut in this position. Fig. B1-4 refers.
6. Offer the eyebolt and release lever to the pressure plate, engaging the eyebolt plain end into the hole provided.

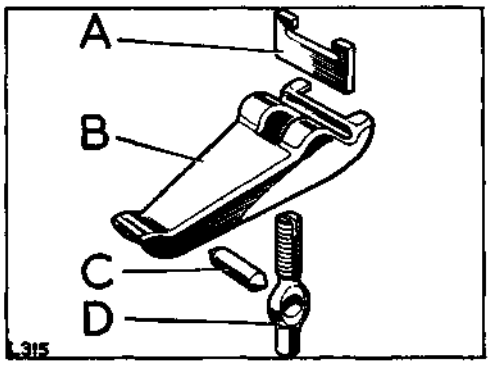


**Fig. B1-7. Release lever and eyebolt arrangement**
A—Strut
B—Release lever
C—Pin for eyebolt
D—Eyebolt

7. Move the strut in its slots and engage the strut lower edge into the recess formed in the release lever.
8. Release the lever and eyebolt. They are now retained to the pressure plate.

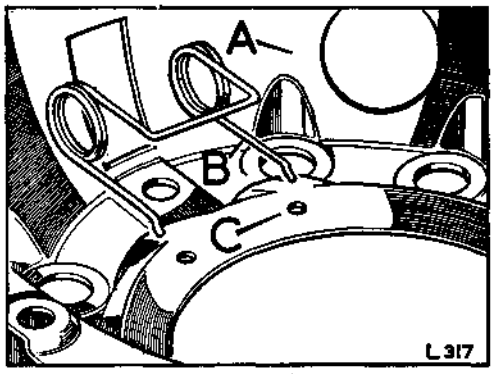


**Fig. B1-8. Fitting Anti-rattle springs**
A—Clutch cover
B—Anti-rattle springs
C—Location holes for springs

## Operation B1-1—*continued*

9. Fit the remaining two release levers in a similar manner.
10. Engage the anti-rattle springs into the holes provided in the clutch cover plate.
11. Place the pressure plate on the wooden blocks under the press and arrange the thrust springs in a vertical position on the plate, seating them on the bosses provided. Lay the cover over the assembled parts, ensuring that the tops of the thrust springs are directly under the seats in the cover.
12. Ensure that the machined portions of the pressure plate lugs are under the slots in the cover and that the parts marked before dismantling are in their correct relative positions.
13. Place the block of wood across the cover, resting it on the spring bosses, and depress the cover, guiding the eyebolts and pressure plate lugs through the holes in the cover.
14. Screw the adjusting nuts on the eyebolts and operate the clutch a few times by means of the press, to ensure that the working parts have settled into their correct positions.
15. Next, adjust the release levers.

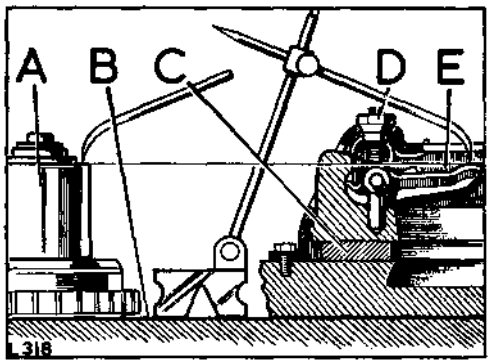


**Fig. B1-9. Setting the release levers**

A—Gauge, Part No. 530103
B—Surface plate
C—Distance pieces, $\frac{3}{8}$ in. (9,5 mm)
D—Adjustment nut for lever
E—Release lever

**Adjusting release levers**

This adjustment must be carried out before the clutch is refitted to the engine, and will always be necessary after complete stripping of the unit, or if any new parts have been fitted.

1. The setting of the clutch release levers is checked, using $\frac{3}{8}$ in. (9,5 mm) distance pieces in place of the driven plate. The levers must be adjusted to a dimension of 1.655 in. (42 mm) from the flywheel face, with a maximum of .010 in. (0,25 mm) difference in height between the three levers.
2. Place the flywheel on a surface plate and set the scribe to 1.655 in. (42 mm) from the flywheel face, using gauge Part No. 530103.
3. Place the three distance pieces on the flywheel in place of the driven plate.
4. Fit the cover assembly to the flywheel by tightening all six securing nuts a turn at a time by diagonal selection, until the unit is fully secured.
5. Check the height of each operating lever and adjust as necessary, by turning the adjustment nut until the top of the lever is exactly level with the scribe. Adjust the two other levers in a similar manner.
6. Secure the adjusting nuts by staking.

## DIAPHRAGM TYPE CLUTCH

Overhaul procedures for the diaphragm type clutch assembly are as follows:

(a) Clutch unit—no dismantling or overhaul are permissible. Replace the unit complete where necessary.

(b) Flywheel—overhaul as described for the coil spring type clutch flywheel.

(c) Clutch driven plate—overhaul as described for the coil spring type clutch driven plate.

## Clutch withdrawal race housing assembly—Operation B1-2

For remove, overhaul and refit details refer to Section C—Gearbox

## Clutch slave cylinder, remove and refit—Operation B1-3

Workshop hand tools:
Spanner sizes: $\frac{1}{2}$ in. AF, $\frac{7}{16}$ in. AF, $\frac{7}{8}$ in. BSF open end, $\frac{7}{16}$ in. AF socket
Screwdriver (medium), Long nosed pliers

### To remove

1. Remove the front floor or gearbox tunnel, as applicable, to gain access to the bell housing. This procedure is described in Section A.
2. Slacken the hydraulic fluid inlet pipe at the slave cylinder. Fig. B1-11 refers.
3. Remove the operating lever return spring, if fitted.
4. Remove the clevis pin securing the clutch shaft operating lever to the cross-shaft connecting tube.
5. Rotate the clutch shaft operating lever and withdraw the push rod from the slave cylinder; if necessary, slacken the spherical bearing fixings to facilitate lever rotation.

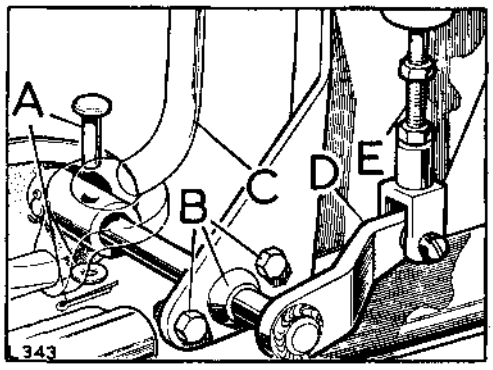


**Fig. B1-10. View of operating shafts**

A—Fixings, clutch shaft lever to connecting tube
B—Spherical bearing and fixings
C—Transfer gear lever, shown ghosted for clarity
D—Operating lever
E—Slave cylinder push rod

6. Remove the fixings and withdraw the slave cylinder from the support bracket.
7. Position a clean container under the slave cylinder and remove the cylinder from the hydraulic fluid inlet pipe.

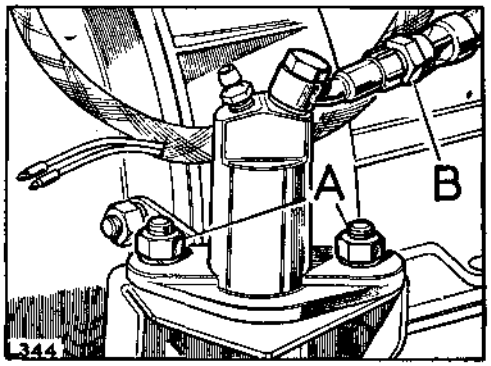


**Fig. B1-11. Slave cylinder fixings (latest type cylinder shown)**

A—Fixings at support bracket
B—Fluid inlet pipe

### To refit

1. Fit the hydraulic fluid inlet pipe to the slave cylinder. Do not fully tighten at this stage.
2. Fit the slave cylinder to the support bracket.
3. Enter the push rod into the slave cylinder to engage the seating in the piston crown. If previously slackened, tighten the spherical bearing fixings.
4. Align the holes in the clutch shaft operating lever and the cross-shaft connecting tube and fit the clevis pin to secure the components. Fig. B1-10 refers.
5. Refit the operating lever return spring, where applicable.
6. Finally tighten the fluid inlet pipe.
7. Refit the front floor or gearbox tunnel as applicable, Section A.
8. Bleed the hydraulic system of air. Operation B-8.

## Clutch slave cylinder, to overhaul—Operation B1-4

Workshop hand tools:
Spanner size: $\frac{7}{16}$ in. AF
Circlip Pliers

### To dismantle

1. Withdraw the dust cover from the end of the slave cylinder and remove the exposed circlip.
2. Hold the fingers over the cylinder bore, apply a low air pressure to the fluid inlet tapping and expel the assembled piston from the bore.

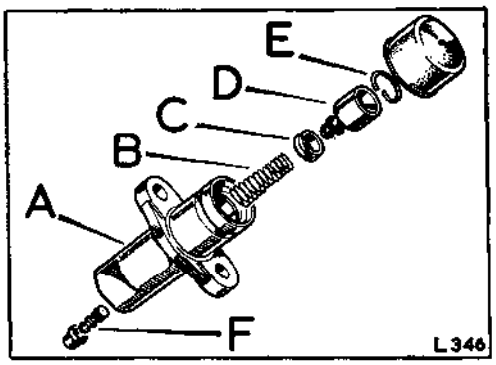


**Fig. B1-12. Exploded view of slave cylinder**

A—Slave cylinder
B—Spring
C—Piston seal
D—Piston
E—Circlip
F—Bleed union

3. Remove the spring and seal from the piston.
4. Clean all components in Girling cleaning fluid and allow to dry.

### Overhaul

1. Examine the cylinder bore and the piston and ensure that they are free from corrosion, scores and ridges. Replace faulty components.
2. Replace the seals and dust cover with those provided in the slave cylinder overhaul kit.
3. Where applicable, replace the ball valve in the bleed union. Do not overtighten the bleed valve when refitting.

### To assemble

1. Lubricate the seals, using Castrol-Girling Rubber Grease, and the remaining internal components using Castrol-Girling Brake and Clutch Fluid.
2. Fit the seal, flat side first, to the piston and locate the spring smaller end on to the piston spigot.
3. Enter the piston assembly, spring first, into the cylinder bore and secure with the circlip.
4. Refit the dust cover.

## Clutch master cylinder, to remove and refit—Operation B1-5

*(For overhaul details, Operation B1-6 refers)*

Workshop hand tools:
Spanner sizes: $\frac{7}{16}$ in. AF, $\frac{1}{2}$ in. AF open end, $\frac{1}{2}$ in. AF socket
Screwdriver (medium), Pliers

### To remove

1. Remove the bonnet panel. Section A.
2. **LH Steering models**
   (a) Remove the left-hand front wing as described in Section R.
   (b) Disconnect the hydraulic fluid pipes at the master cylinder.
   (c) Disconnect the fluid reservoir fixings where applicable.
   (d) Remove the clutch pedal bracket fixings (from inside the vehicle cab) and remove the clutch pedal, bracket and master cylinder complete. Fig. B1-13. refers.
   (e) Continue removal procedure from paragraph 4 onward.
3. **RH Steering models**
   (a) Disconnect the hydraulic fluid pipes at the master cylinder.
   (b) Disconnect the fluid reservoir fixings where applicable.

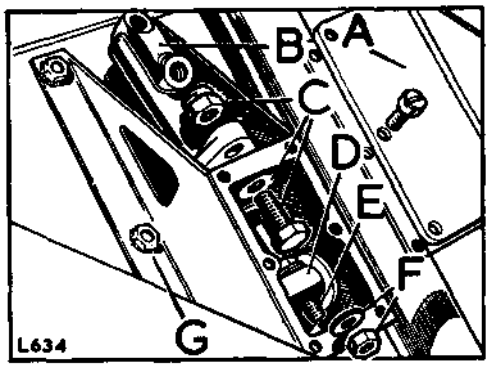


**Fig. B1-13. View of master cylinder and mounting bracket**

A—Bracket top cover, gasket and fixings
B—Master cylinder
C—Master cylinder fixings
D—Trunnion distance piece
E—Push rod
F—Push rod end fixing
G—Pedal bracket

4. Remove the top cover and gasket from the clutch pedal bracket.
5. Remove the master cylinder plunger end fixing at the pedal trunnion.
6. Remove the fixings and withdraw the master cylinder from the mounting bracket.

### To refit

1. Fit the master cylinder to the pedal bracket, engaging the cylinder push rod into the hole provided in the pedal trunnion.
2. Fit the push rod end fixing.
3. **LH Steering models**
   Fit the pedal, bracket and master cylinder complete to the vehicle.

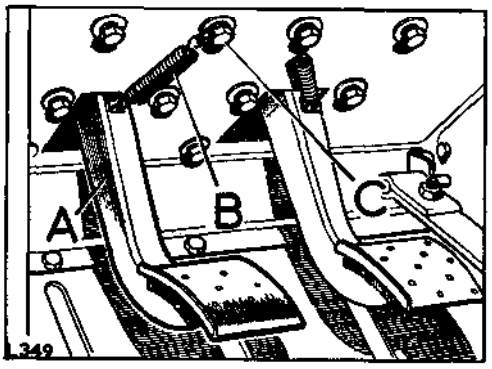


**Fig. B1-14. Clutch pedal bracket fixings, LHStg model shown**

A—Clutch pedal
B—Pedal return spring
C—Bracket fixings (6 off)

4. Fit the hydraulic fluid pipe/s.
5. Bleed the hydraulic system. Operation B-8.
6. Adjust the clutch pedal height and linkage travel. Operation B-9.
7. Fit the top cover plate and gasket to the pedal bracket and refit the fluid reservoir, where applicable.
8. **LH Steering models**
   Fit the LH front wing. Section R.
9. Refit the bonnet panel. Section A.

## Clutch master cylinder, to overhaul—Operation B1-6

*(For removal and refitting details, Operation* B1-5 *refers)*

Workshop hand tools:
Spanner sizes: $\frac{1}{2}$ in. AF open end
Screwdriver (small), Pliers (snipe nosed)

There are two types of master cylinder in use. One type has a hydraulic fluid reservoir as an integral part of the cylinder and therefore has no fluid inlet tapping.

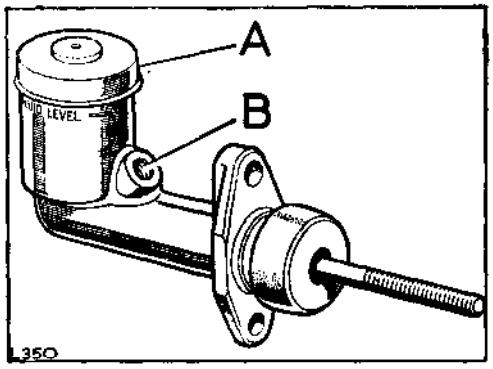


**Fig. B1-15. Master cylinder with integral reservoir**

A—Fluid reservoir cap
B—Fluid outlet tapping

The other type master cylinder is fed from an external hydraulic fluid reservoir and therefore an inlet pipe connection is provided.

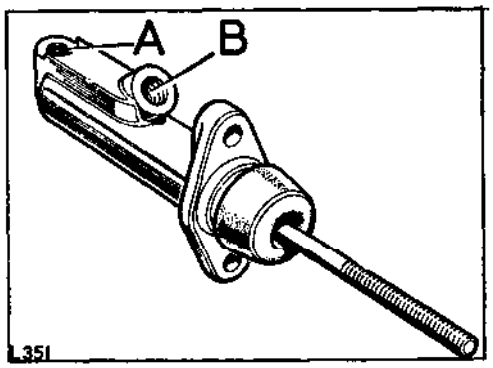


**Fig. B1-16. Master cylinder for use with external reservoir**

A—Fluid inlet tapping
B—Fluid outlet tapping

The method of operation, the internal components and the overhaul procedures are identical for both types.

### To dismantle

1. Remove the plain washer, nut and rubber cover from the push rod.

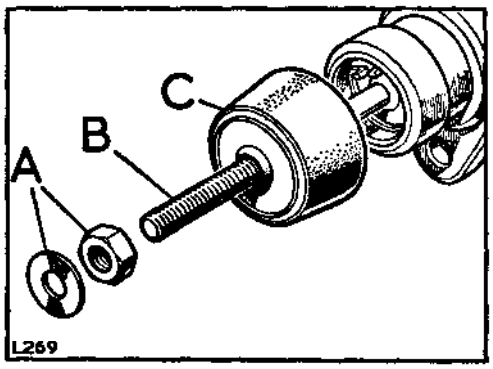


**Fig. B1-17. Push rod end details**

A—Locknut and washer
B—Push rod
C—Rubber cover

2. Remove the circlip and withdraw the push rod and retaining washer.

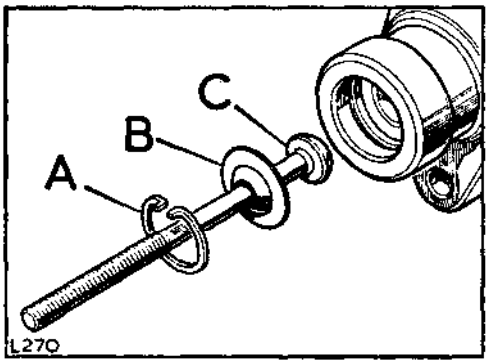


**Fig. B1-18. Push rod fixings**

A—Circlip
B—Retaining washer
C—Push rod

3. Withdraw the piston assembly from the master cylinder. If necessary, apply a low air pressure to the outlet port to expel the piston.

## Operation B1-6—*continued*

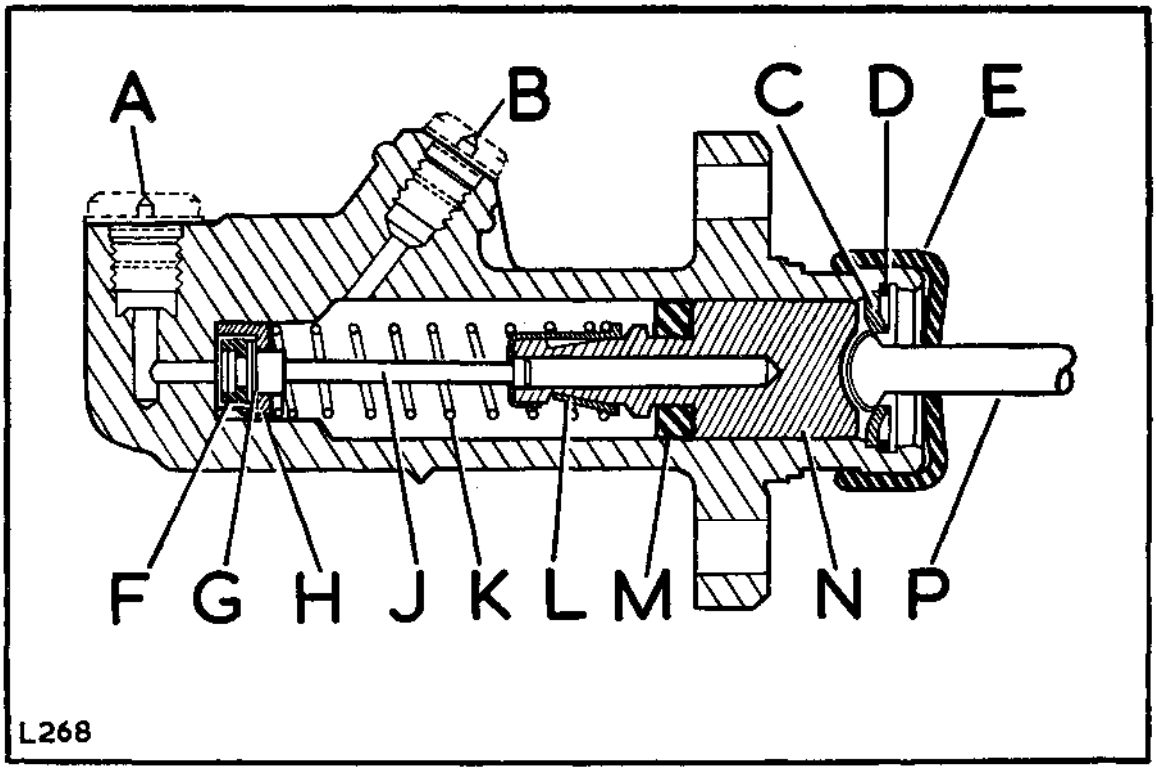


**Fig. B1-19. Sectioned view of master cylinder**

A—Inlet port
B—Outlet port
C—Spring washer
D—Circlip
E—Dust cover
F—Valve seal
G—Spring washer
H—Valve spacer
J—Valve stem
K—Return spring
L—Spring retainer
M—Piston seal
N—Piston
P—Push rod

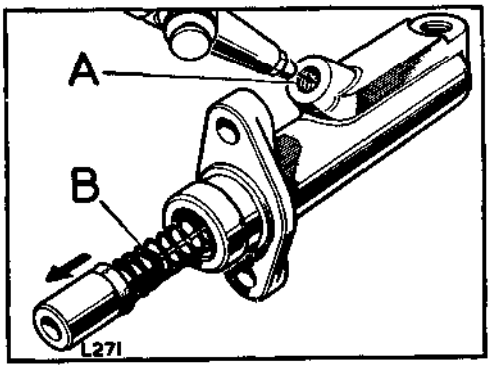


**Fig. B1-20. Withdrawing piston assembly**

A—Apply low air pressure to outlet port
B—Piston assembly

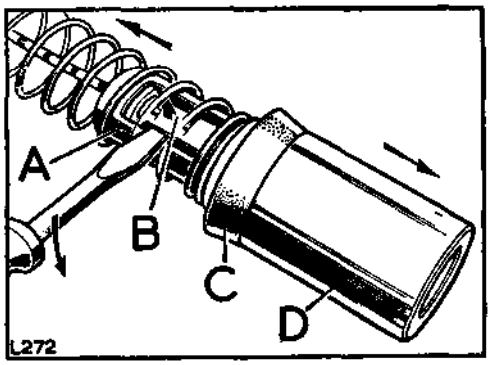


**Fig. B1-21. Removing piston**

A—Spring retainer
B—Locking prong
C—Seal for piston
D—Piston

## Operation B1-6—*continued*

4. Prise the locking prong of the spring retainer clear of the piston shoulder and withdraw the piston. Remove the piston seal.

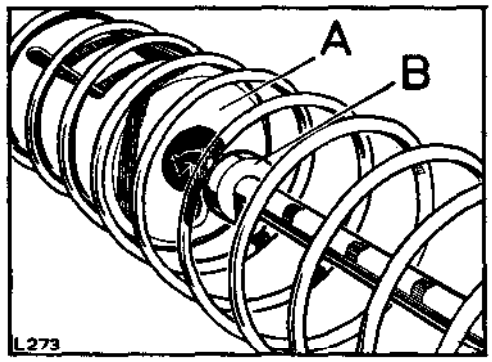


**Fig. B1-22. Valve stem to spring retainer location**
A—Spring retainer
B—Valve stem

5. Compress the spring and position the valve stem to align with the larger hole in the spring retainer. Withdraw the spring and retainer.

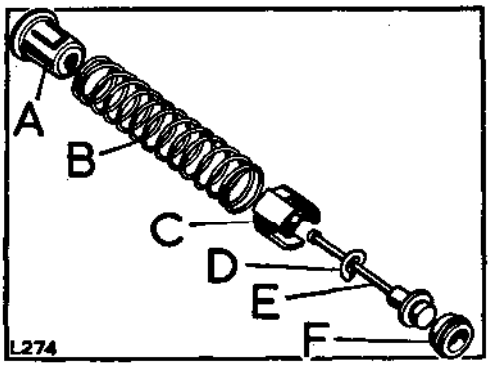


**Fig. B1-23. Spring and valve assembly**
A—Spring retainer
B—Spring
C—Valve spacer
D—Spring washer
E—Valve stem
F—Valve seal

6. Slide the valve spacer over the valve stem. Remove the special spring washer and valve seal from the stem.

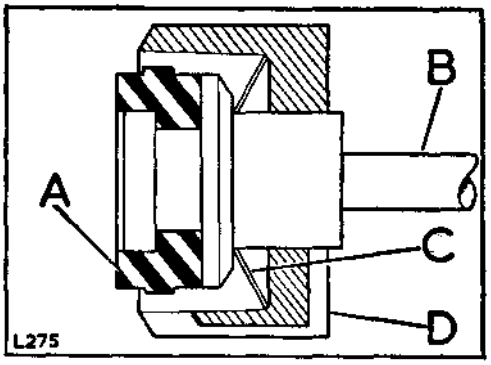


**Fig. B1-24. Valve assembly**
A—Valve seal
B—Valve stem
C—Spring washer
D—Valve spacer

### Inspection

1. Clean all components in Girling cleaning fluid and allow to dry.
2. Examine the cylinder bore and piston, ensure that they are smooth to the touch with no corrosion, score marks or ridges. If there is any doubt, fit new replacements.
3. The seals and dust cover should be replaced with new components. These items are all included in the master cylinder overhaul kit.

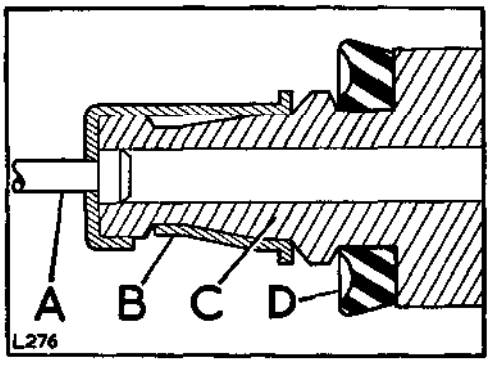


**Fig. B1-25. Piston and spring retainer**
A—Valve stem
B—Prong in engaged position
C—Piston
D—Seal

## Operation B1-6—*continued*

**To assemble**

1. Smear the seals with Castrol-Girling Rubber Grease and the remaining internal items with Castrol-Girling Brake and Clutch Fluid.
2. Fit the valve seal, flat side first, to the end of the valve stem.
3. Place the spring washer, domed side first, over the small end of the valve stem, then fit the valve spacer, legs first, and the coil spring.
4. Insert the retainer into the spring and compress until the stem passes through the keyhole and is engaged in the centre, see Fig. B1-25.
5. Fit the seal, large diameter last, to the piston.
6. Insert the piston into the spring retainer and engage the locking prong.
7. Smear the piston with Castrol-Girling Rubber Grease and insert the assembly, valve end first, into the cylinder.
8. Fit the push rod, retaining washer and circlip.
9. Smear liberally the inside of the dust cover with Castrol-Girling Rubber Grease and fit the cover over the push rod and cylinder.
10. Fit the adjuster nut and washer to the push rod.

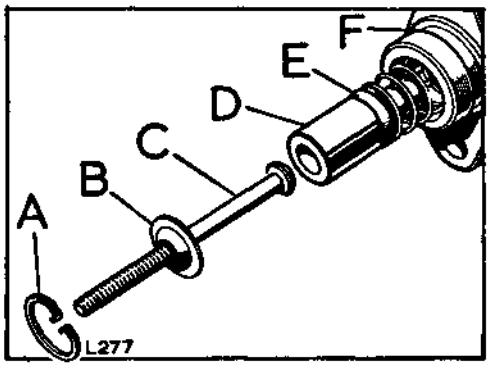


**Fig. B1-26. Piston and push rod assembly**

A—Circlip
B—Retaining washer, concave face toward push rod head
C—Push rod
D—Piston
E—Seal for piston
F—Cylinder

## Clutch pedal and bracket, remove and refit—Operation B1-7

This operation includes removal and refitting of the bracket mounted hydraulic fluid reservoir, where fitted

Workshop hand tools:

Spanner sizes: $\frac{7}{16}$ in. AF, $\frac{1}{2}$ in. AF open end, $\frac{1}{2}$ in. AF socket
Screwdriver (medium), Pliers

### To remove

#### Fluid reservoir

1. Remove the bonnet panel. Section A.
2. Disconnect the fluid pipes at the reservoir.
3. Remove the fixings and withdraw the reservoir complete with mounting clip.

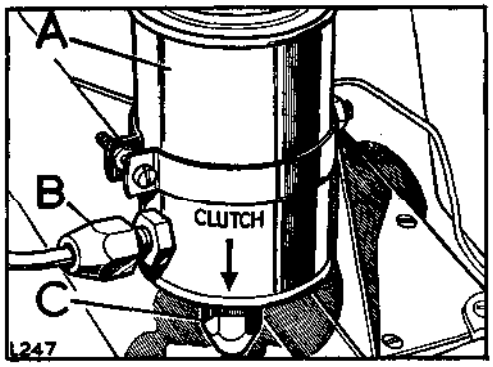


**Fig. B1-27. Bracket mounted fluid reservoir**

A—Fluid reservoir
B—Brake fluid pipe
C—Clutch fluid pipe

#### Clutch pedal and bracket

**Note:** For LH Steering models, first remove the LH front wing. Section R.

1. Disconnect the fluid outlet pipe (and inlet pipe where applicable) at the master cylinder.
2. Remove the clutch pedal bracket fixings (from inside the vehicle cab) and remove the bracket complete with pedal and master cylinder.

#### Clutch pedal and bracket, to dismantle

1. Remove the cover plate and gasket from the clutch pedal bracket.
2. Remove the fixing from the end of the master cylinder push rod.
3. Remove the locating pin and withdraw the pedal shaft securing the pedal to the bracket. Withdraw the pedal.
4. The pedal bushes may be renewed, if necessary.

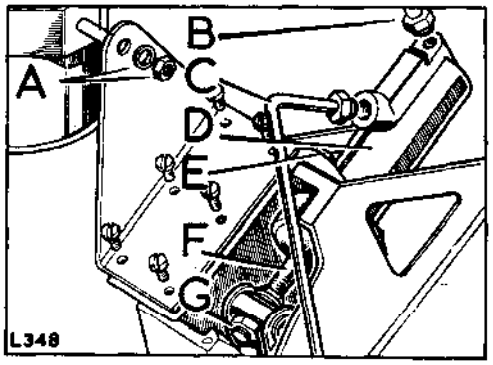


**Fig. B1-28. View of master cylinder and mounting bracket**

A—Bracket top cover, gasket and fixings
B—Fluid inlet pipe, where applicable
C—Fluid outlet pipe
D—Master cylinder
E—Master cylinder fixings
F—Push rod
G—Push rod end fixing

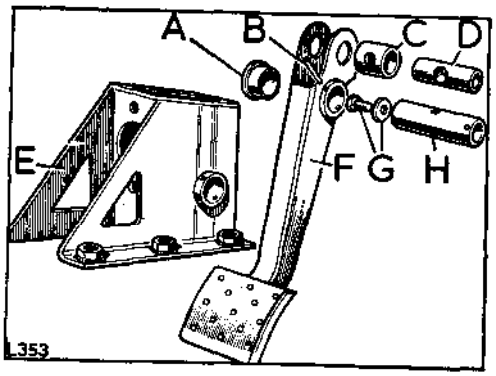


**Fig. B1-29. Clutch pedal details**

A—Pedal bush
B—Locating pin
C—Trunnion distance piece
D—Pedal trunnion
E—Pedal bracket
F—Clutch pedal
G—Oil plug and joint washer
H—Pedal shaft

## Operation B1-7—*continued*

**To assemble and refit**

1. Remove the oil plug and washer from the pedal shaft. Fill the shaft bore with clean engine oil and also lubricate the pedal trunnion and distance piece. Refit the oil plug and washer.
2. Fit the pedal to the bracket and secure with the pedal shaft. Fit the locating pin to the pedal shaft and bracket.
3. Engage the master cylinder push rod into the hole provided in the pedal trunnion and fit the end fixing.
4. Fit the assembled pedal bracket to the vehicle.
5. Fit the fluid pipe/s to the master cylinder. Fig. B1-28 refers.
6. If previously removed, fit the fluid reservoir.
7. Fit the fluid pipes to the reservoir. Fig. B1-27 refers.
8. Bleed the brakes hydraulic system, Section H, where a common fluid reservoir is used.
9. Bleed the clutch hydraulic system. Operation B1-8.
10. Adjust the clutch pedal height and linkage travel. Operation B1-9.

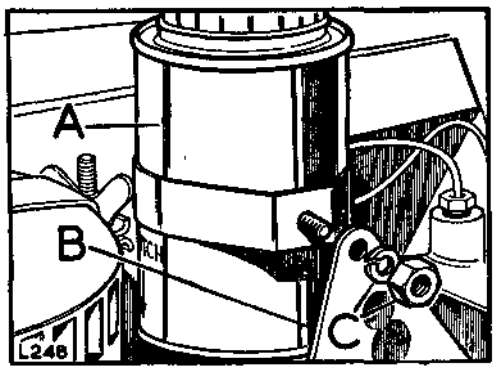


**Fig. B1-30. Fixings for reservoir**
A—Reservoir and clamp
B—Mounting bracket
C—Fixings

11. Fit the top cover plate and gasket to the pedal bracket.
12. Where removed, fit the front wing. Section R.
13. Fit the bonnet panel. Section A.

## Hydraulic system, to bleed—Operation B1-8

Workshop hand tools:
Spanner sizes: $\frac{7}{16}$ in. AF, $\frac{7}{16}$ in. BSF open end, $\frac{7}{16}$ in. AF socket
Length of suitable tubing, Clean jar, Screwdriver (medium)

If the level of fluid in the reservoir is allowed to fall too low, or if any section of the clutch pipe line has been disconnected, air may enter the hydraulic system. This will result in incorrect clutch operation which may take the form of clutch judder and snatch. To rectify this, the air must be expelled by bleeding the hydraulic system.

During the procedure, the fluid in the reservoir must be continually replenished to prevent further air from being introduced into the system.

The correct fluid level for the different type reservoirs is as follows:

(a) **Reservoir integral with master cylinder**
Keep fluid level with marking on side of reservoir.

(b) **Separate combined fluid reservoir serving brake and clutch systems**
Keep fluid level above the top of the inner (clutch) reservoir.

**Use only the recommended type of hydraulic fluid. Section X refers.**

### Procedure

1. Remove the front floor or gearbox tunnel, as applicable, to gain access to the slave cylinder on the bell housing. This procedure is described in Section A.
2. Attach a length of rubber tubing to the slave cylinder bleed screw and place the lower end of the tube in a glass jar containing a small amount of fluid.
3. Slacken the bleed screw and pump the clutch pedal, pausing at each end of each stroke, until the fluid issuing from the tube shows no signs of air bubbles when the tube is held below the surface of the fluid in the jar.

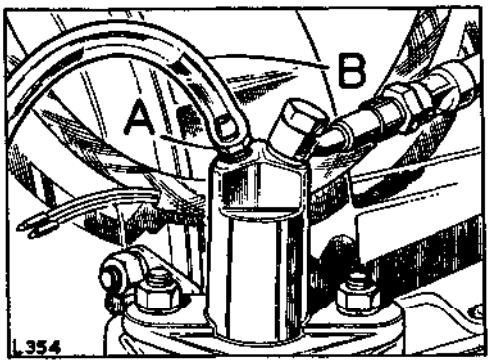


**Fig. B1-31. View of slave cylinder**
A—Bleed screw B—Suitable tubing

4. Holding the tube under the fluid surface, tighten the bleed screw when commencing a pedal stroke.
5. When satisfactory, refit the front floor or gearbox tunnel as applicable. Section A.

## Clutch linkage and pedal travel adjustment—Operation B1-9

Workshop hand tools:

Spanner sizes: $\frac{7}{16}$ in. AF, $\frac{1}{2}$ in. AF open end

The following information concerns early and late type clutches.

Late models have a hydrostatic clutch, that is, clutch mechanism which requires no adjustment for the life of the clutch plate.

Models with the latest type clutch mechanism can be easily identified as follows:

(a) The support bracket for clutch slave cylinder on early models encloses the cylinder; on late models the cylinder is exposed.

(b) The operating lever on early models is straight, but on late models it is cranked.

(c) Return spring is not fitted to the operating lever on late models.

All these differences are clearly shown at Figs. B1-32 and B1-33.

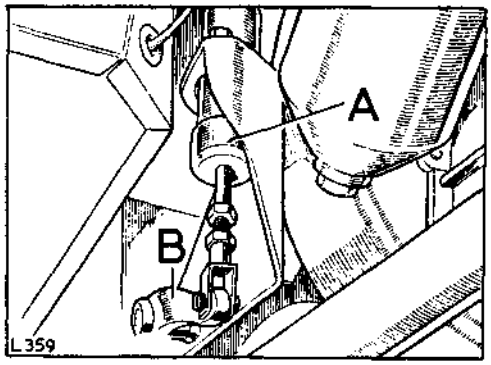


**Fig. B1-33. Late type clutch mechanism**

A—Exposed slave cylinder
B—Cranked operating rod

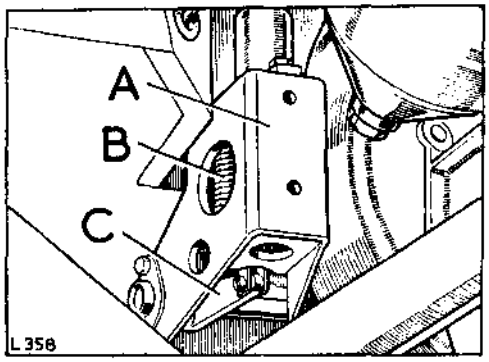


**Fig. B1-32. Early type clutch mechanism**

A—Support bracket enclosing slave cylinder
B—Return spring for operating lever
C—Straight operating lever

### Procedure

### Pedal position, to adjust—All models

The lock-stop bolt located in the pedal bracket back plate, should not be disturbed, but in the event of this being absolutely necessary, it must be reset as follows: See Fig. B1-34.

1. Support the pedal pad at the correct height from the toe-board, and screw in bolt A until it touches the pedal shaft stop plate. Tighten the locknut.

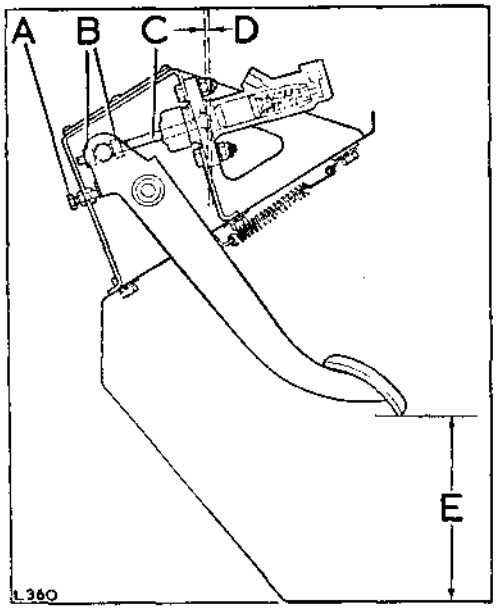


**Fig. B1-34. Clutch linkage setting**

A—Pedal position setting bolt
B—Master cylinder push rod locknuts
C—Master cylinder push rod
D—Free play $\frac{1}{16}$ in. (1,5 mm)
E—Models with non-hydrostatic clutch mechanism: $6\frac{1}{4}$ in. (158 mm)
Models with hydrostatic clutch mechanism: $5\frac{1}{2}$ in. (140 mm)

## Operation B1-9—*continued*

### Master cylinder free play, to adjust—Early models. Fig. B1-34 refers

1. Check the free play D in the master cylinder push rod C which should be $\frac{1}{16}$ in. (1,5 mm) at the push rod and is felt as approximately $\frac{5}{16}$ in. (8 mm) at the pedal pad; if it is less than the given figure:
2. Slacken off locknut B and rotate the push rod C with the fingers, until the correct movement has been attained.

### Pedal free play, to adjust—Early models

1. Slacken the push rod locknut, at the slave cylinder. See Fig. B1-35.

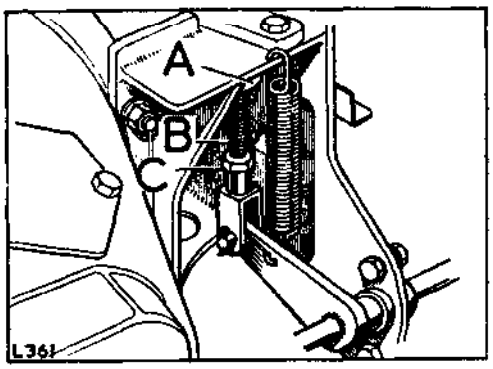


**Fig. B1-35. Clutch adjustment**

A—Slave cylinder
B—Push rod
C—Locknut for push rod

2. Adjust the push rod by rotating until the total free movement at the pedal is $1\frac{1}{2}$ in. (38 mm).

   The total free play is felt in two stages:

   (a) Light movement of approximately $\frac{5}{16}$ in. (8 mm), which takes up the master cylinder free play against the pedal return spring.

   (b) Slightly heavier movement which should be approximately $1\frac{3}{16}$ in. (30 mm) which takes up the slave cylinder free play through the hydraulic system and against the slave cylinder return spring.

3. Secure with the lock nut.

### Hydrostatic clutch mechanism—Late models

1. The hydrostatic clutch operating mechanism is correctly set on initial assembly, to give approximately $\frac{5}{16}$ in. (8 mm) free movement at the pedal pad and requires no adjustment throughout the life of the clutch plate, providing that no part or parts of the clutch assembly have been removed or replaced.

   **Important:** Do not 'ride' the clutch as immediately the $\frac{5}{16}$ in. (8 mm) free movement is taken up, the clutch mechanism begins to operate and premature clutch plate wear will result.

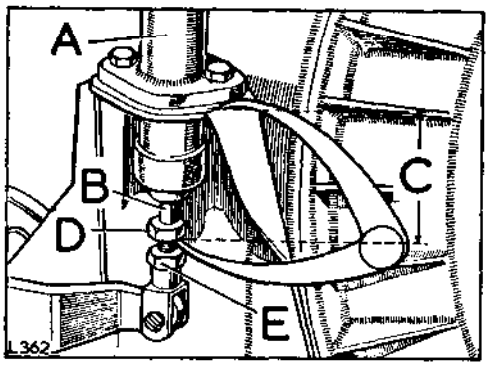


**Fig. B1-36. Setting hydrostatic clutch linkage, Method A**

A—Slave cylinder
B—Push rod
C—$2\frac{7}{8}$ in. (73,4 mm). Check dimension with calipers as shown
D—Nut must be at end of push rod thread
E—Lock nut for push rod

2. Should a new clutch plate have been fitted, or a clutch assembly, clutch pressure plate, clutch slave cylinder, support bracket for cylinder or flywheel have been removed and replaced, it becomes necessary to re-set the free movement at the pedal pad as follows:

   (a) If necessary bleed system Operation B1-8, then hold operating lever on the clutch cross-shaft down and ensure there is no free movement or backlash in the clutch withdrawal mechanism.

## Operation B1-9—*continued*

### To adjust, Method A

(b) Adjust the push rod if necessary by slackening off lock nut 'E', and rotating push rod with the fingers to give dimension 'C' as shown in Fig. B1-36. Do not adjust nut 'D' to obtain this figure. Nut 'D' must always be tightened to the end of the push rod thread.

### To adjust, Method B

(c) Fully depress clutch pedal and withdraw rubber boot on cylinder. Then adjust push rod until there is approximately $\frac{1}{8}$ in. (3 mm) clearance between bottom of piston and circlip. See Fig. B1-37.

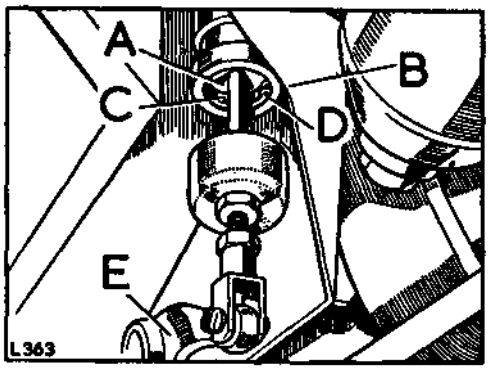


**Fig. B1-37. Setting hydrostatic clutch, Method B**

A—Piston
B—Exposed slave cylinder
C—$\frac{1}{8}$ in. (3 mm)
D—Circlip
E—Cranked operating rod

## Fault diagnosis—Clutch unit

| Symptom | Possible cause | Investigation | Remedy |
|---|---|---|---|
| **A—Grabbing clutch (Harsh engagement from standing start, often followed by clutch judder)** | Operating mechanism faulty | Check operating levers for wear and binding which usually indicates a binding withdrawal race thrust bearing | Free off bearing, Section C. Replace levers as necessary |
| | | Check clutch pedal for sticking | Free off pedal and check for damaged and distorted parts including return spring. Replace as necessary |
| | | Check release lever adjustment | Reset as necessary |
| | Clutch unit faults | Check for oil on friction faces | Clean off metal faces. Replace driven plate. Rectify oil leak |
| | | **Note:** The flywheel housing drain plug is for use when the vehicle is operating in deep mud or water. At all other times the plug should be removed from the drain tapping and stowed | |
| | | Check clutch plates and flywheel for wear. Check flywheel run-out. Check also for glazing on driven plate linings | Reclaim or replace as applicable clutch plates, Section B, flywheel, Section A |
| | | Check for driven plate hub splines sticking on pinion shaft | Free driven plate and check for wear and distortion. Check pinion shaft for wear |
| | | Check for broken or weak pressure springs. Check torque damper springs in clutch driven plate | Replace as necessary |
| | Engine mountings faults | Check for damaged or deteriorated engine mountings. Check fixings for looseness | Replace or tighten as applicable |
| **B—Slipping clutch (Indicated by vehicle road speed not responding adequately to engine speed increases)** | Faulty driving technique | Ensure that when operating the clutch, this is done fully and as quickly as is consistent with normal driving requirements. Do not increase engine speed with clutch partially engaged | In operator's hands |
| | Operating mechanism setting incorrect (coil spring type units) | Check setting of clutch adjustment | Reset as necessary |
| | Operating mechanism faulty | Check for binding withdrawal lever | Free lever and check for wear and distortion |
| | | Check clutch pedal for insufficient free movement | Adjust pedal setting |
| | | Check for binding on clutch pedal moving parts | Rectify or replace parts |
| | Clutch unit faults | Check for oil on friction faces | Clean off metal faces. Replace driven plate. Rectify oil leak |
| | | **Note:** The flywheel housing drain plug is for use when the vehicle is operating in deep mud or water. At all other times the plug should be removed from the drain tapping and stowed | |
| | | Check for broken or weak pressure springs | Replace as necessary |

## Fault diagnosis—Clutch unit—*continued*

| Symptom | Possible cause | Investigation | Remedy |
|---|---|---|---|
| **B—Slipping clutch—cont** | Clutch unit faults—cont. | Check clutch plates and flywheel for wear and distortion | Reclaim or replace as applicable clutch plates, Section B, flywheel, Section A |
| | | Check clutch driven plate for fractures and distortion. Damage may be caused by accidental loading during assembly of gearbox to engine. Always support gearbox weight during refitting | Replace driven plate and check mating components for damage |
| **C—Dragging or spinning clutch** (A spinning clutch results in initial gear crashing on engagement from a standing start. Normal gear engagement is possible if a suitable pause is made between depressing the clutch pedal and engaging the gear. A dragging clutch results in gear crashing regardless of the time taken for the gear engagement procedure) | Operating mechanism setting incorrect or faulty | Check setting of clutch adjustment if applicable (coil spring type unit) | Reset as necessary |
| | | Check pedal adjustment setting | Reset as necessary |
| | | Check master cylinder push-rod free movement setting | Reset as necessary |
| | | Check clutch withdrawal sleeve for sticking | Rectify. Examine mating surfaces for scores and wear. Replace as necessary |
| | Clutch unit faults | Check as described under 'Clutch unit faults'. Paragraph B. | |
| | | Check for primary pinion bush binding | Rectify or replace as necessary |
| | | Check clutch driven plate hub for binding on primary pinion splines. Check for too thick friction linings. Ensure linings are sound | Replace as necessary |
| | | Check for distorted clutch pressure plate and clutch cover | Replace as applicable |
| | | Check for foreign matter in clutch unit | Clean and replace components as applicable |
| | Hydraulic system defects | Check fluid level in reservoir | Replenish as necessary |
| | | Check for air in the system by bleeding | |
| **D—Rattling clutch** | Operating mechanism faults | Check for defective pedal return spring | Replace |
| | | Check for defective operating lever return spring, where applicable | Replace |
| | | Check linkage settings | Reset as necessary |
| | Clutch unit faults | Check for damaged pressure plate | Rectify or replace as applicable |
| | | Check splines on clutch driven plate and primary pinion shaft for wear | Replace as necessary clutch plate, Section B, primary pinion, Section C |

## Fault diagnosis—Clutch unit—*continued*

| Symptom | Possible cause | Investigation | Remedy |
|---|---|---|---|
| **D—Rattling clutch—cont** | Clutch unit faults—cont. | Check clutch driven plate for loose or broken springs and for warping | Replace driven plate |
| | | Check for wear in the clutch withdrawal mechanism | Refer to Section C |
| | | Check for worn primary pinion bush | Replace, Section A |
| **E—Squeaking clutch** | Primary pinion bush fault | Check for bush binding on primary shaft or turning in flywheel | Replace, Section A |
| **F—Vibrating clutch or clutch judder (often preceded by clutch grab)** | Clutch unit faults | Check the clutch driven plate for distortion and damage and for loose or broken torque springs | Replace driven plate |
| | | Check for oil and other foreign matter on the clutch friction linings | Replace driven plate and clean related parts |
| | | **Note:** The flywheel housing drain plug is for use when the vehicle is operating in deep mud or water. At all other times the plug should be removed from the drain tapping and stowed | |
| | | Check for incorrectly fitted clutch pressure plate | Dismantle from clutch and refit, where applicable |
| | | Check that contact witness on friction linings is evenly distributed | Replace driven plate as necessary |
| | Defects other than in clutch unit | Check for loose flywheel fixings | Tighten to correct torque loading, Section A. Check flywheel run-out |
| | | Check for loose engine mountings | Tighten |
| | | Check for worn propeller shaft universal joints | Refer to Section D |
| | | Check for bent primary pinion shaft | Refer to Section C |
| **G—Stiff clutch operation** | Operating linkage fault | Check for damaged moving parts in operating linkage | Replace as necessary |
| | | Lubricate linkage and recheck operation | |
| **H—Clutch knocks** | Clutch unit fault | Check for worn clutch driven plate hub splines | Replace driven plate |
| | Primary pinion bush | Check for wear in bush | Replace as necessary |
| **J—Fractured clutch plate** | Incorrect fitting method | Damage may be caused by accidental loading during fitting. Always support gearbox weight during fitting. | Replace driven plate. Check mating components for damage |
| **K—Excessive lining wear** | Overloading vehicle | Refer to Owner's Instruction Manual for permissible loads details | |
| | Slipping clutch | Check as described under 'slipping clutch'. Refer to Paragraph B. | |

## GENERAL DATA

### Clutch, coil spring type

| | |
|---|---|
| Type | Single dry plate, 9 in. (230 mm) diameter. Borg and Beck A6 type |
| Operation: | |
| Later type | Hydraulic (hydrostatic) |
| Early type | Non-hydrostatic |
| Engine applicability | 2¼ litre diesel (early models), 2¼ litre petrol |

### Clutch, diaphragm spring type

| | |
|---|---|
| Type | Single dry plate, 9½ in. (241 mm) diameter. Borg and Beck DS type |
| Operation | Hydraulic (hydrostatic) |
| Engine applicability | 2.6 litre petrol, 2¼ litre diesel (later models), 2¼ litre petrol (optional) |

| | |
|---|---|
| **Thrust springs (coil spring type clutch)** | Number off—9 |
| Free length (2¼ litre petrol) | 2.680 in. (68 mm) |
| Free length (2¼ litre diesel) | 2.688 in. (68,5 mm) |
| Working length | 1.688 in. (43 mm) |
| Load at working length | 135–145 lb (61–65 kg) |
| Colour identification | Yellow and light green paint (early 2¼ litre petrol)<br>Yellow and green paint (early 2¼ litre diesel)<br>Black paint (all later models) |

### Pressure plate

| | |
|---|---|
| Re-grinding limit | .010 in. (0,25 mm) undersize |
| Minimum thickness | 1.531 in. (39 mm) |

### Operating levers

| | |
|---|---|
| Height from flywheel face using ⅜ in. (9,5 mm) distance piece in place of the driven plate | 1.655 in. (42 mm) |

### Driven plate

| | |
|---|---|
| Diameter, coil spring type clutch | 9 in. (230 mm) |
| Diameter, diaphragm spring type clutch | 9½ in. (241 mm) |
| Thickness of plate, new | .330 in. (8,38 mm) |
| Maximum permissible wear | .120 in. (3 mm) |
| Damper springs identification colours: | |
| 2¼ litre petrol | |
| 9 in. plate | 3 off buff or white; 3 off light green |
| 9½ in. plate | 6 off green |
| 2¼ litre diesel | |
| 9 in. plate | 3 off dark grey; 3 off light green |
| 9½ in. plate | 6 off green |
| 2.6 litre petrol | |
| 9½ in. plate | 3 off dark grey; 3 off light green |

### Withdrawal mechanism

| | |
|---|---|
| Clearance of flanged bushes on cross-shaft | .001 in. to .003 in. (0,02 mm to 0,07 mm) |
| Clearance of LH bush on cross-shaft | .004 in. to .006 in. (0,102 mm to 0,14 mm) |
| Clearance of bush on withdrawal sleeve | .003 in. to .006 in. (0,07 mm to 0,15 mm) |

### Clutch pedal unit

| | |
|---|---|
| Fit of bush on pedal shaft | .001 in. to .003 in. (0,02 mm to 0,07 mm) clearance |
| Bush reamed bore | .750 in. (20 mm) |

### Master cylinder

| | |
|---|---|
| Type | Girling cv |
| Bore | $\frac{3}{4}$ in. (19 mm) |
| Stroke | $1\frac{3}{8}$ in. (35 mm) |
| Push-rod free movement | $\frac{1}{16}$ in. (1,5 mm) |

### Slave cylinder

| | |
|---|---|
| Type | Girling |
| Bore | $\frac{7}{8}$ in. (22 mm) |

# SECTION C—GEARBOX

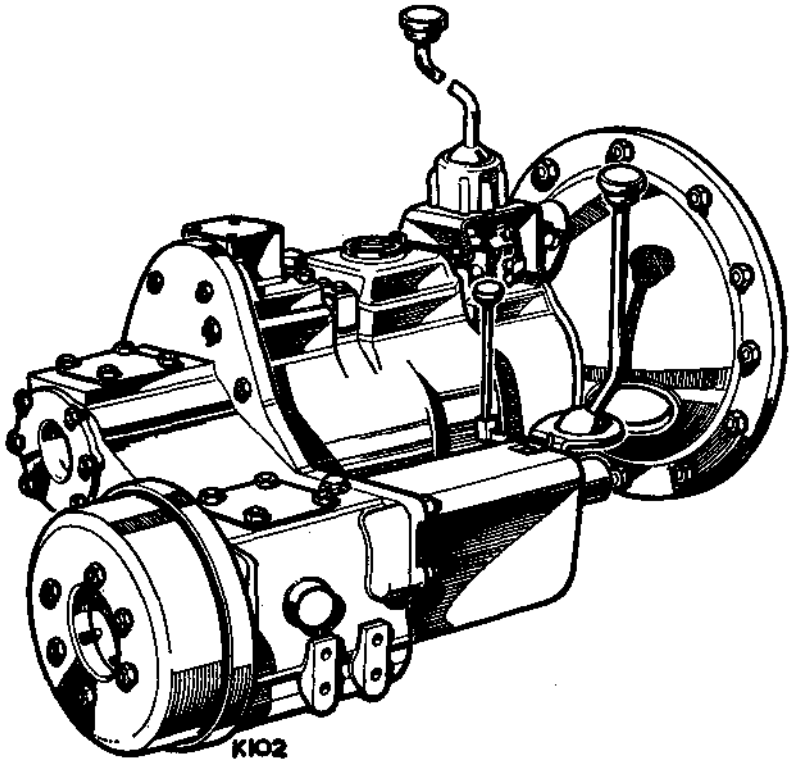


**Fig. C1-1. Gearbox**

# INDEX—GEARBOX

*Note: A comprehensive, detailed index is included at the end of this manual.*


| Description | Operation No. |
|---|---|
| Exploded views and detail description | |
| General description and operation | |
| Seat base | 1 |
| **MAIN GEARBOX** | 3 |
| Bell housing | 16—17 |
| Clutch withdrawal unit | 14—15 |
| Gearbox casing, rear bearings and oil seal | 24—25 |
| Gear change lever | 11—12 |
| Layshaft and gears | 20—21 |
| Lubrication | 2 |
| Mainshaft and gears | 22—23 |
| Primary pinion | 17 |
| Selector shafts and forks | 18—19 |
| Reverse gear wheels | 25 |
| Reverse stop, main gear change lever | 13 |
| **TRANSFER BOX** | 7—8—8A |
| Bearing housing, mainshaft rear | 8—8A |
| Intermediate shaft | 7—8—8A |
| Intermediate gear | 7—8—8A |
| Lubrication | 2 |
| Mainshaft gear for transfer box | 22 |
| Rear output shaft and flange | 8—8A |
| Speedometer drive and housing | 5—6 |
| Transfer gears, high and low | 7—8—8A |
| Transfer gearchange lever | 7 |
| Transmission brake | 4 |
| **FRONT OUTPUT SHAFT HOUSING** | 9—10 |
| Four wheel drive change lever | 10 |
| Front output shaft and flange | 10 |
| Lubrication | 2 |
| Selector shaft, four wheel drive | 10 |
| Selector shaft, transfer gears | 10 |

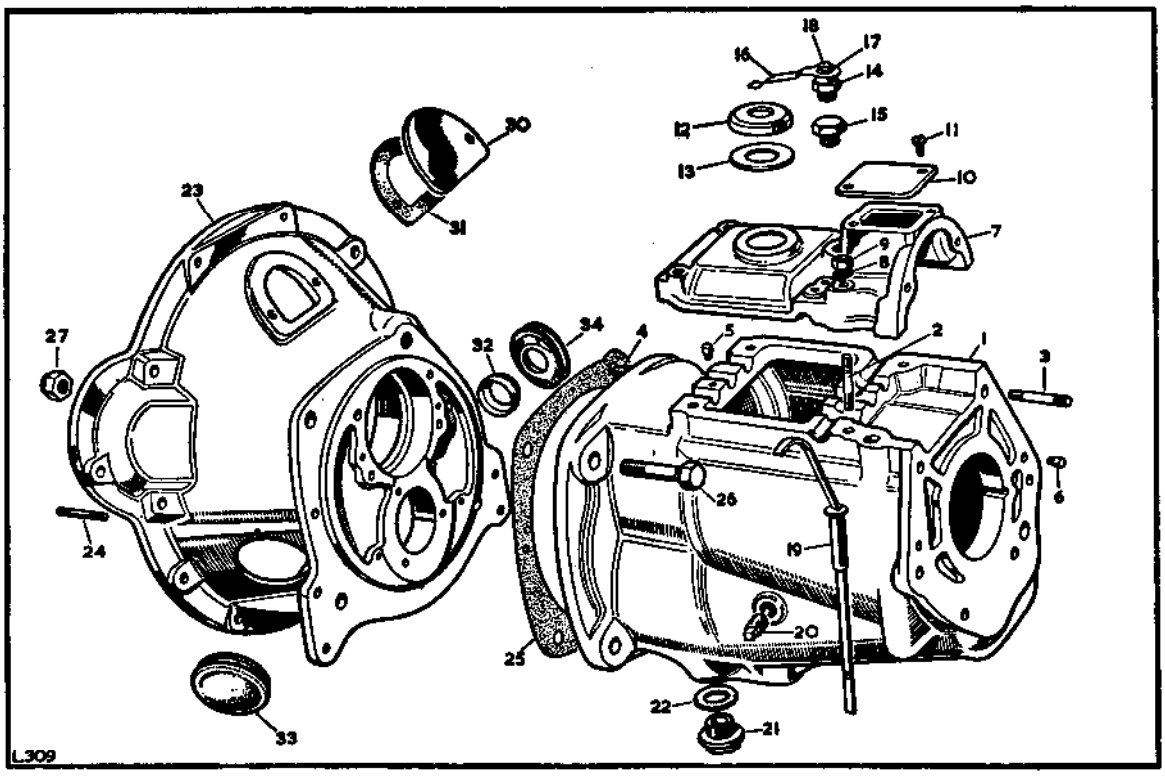


**Fig. C1-2. Layout of the gearbox unit casings**

1 Gearbox casing assembly
2 Stud or bolt for top cover and gear change plate
3 Stud, short, for transfer casing
4 Stud for bell housing
5 Dowel locating top cover
6 Dowel locating transfer casing
7 Top cover for gearbox
8–9 Fixings for top cover, used with stud
10 Inspection cover plate for selectors
11 Set screw fixing cover plate
12 Oil filler cap
13 Joint washer for cap } early gearboxes
14 Plug for retaining spring and cap
15 Plug retaining selector spring (late gearboxes)
16 Retaining spring for cap (early gearboxes)
17–18 Fixings for spring } early gearboxes
19 Oil level dipstick
20 Oil level filler plug
21 Drain plug for gearbox
22 Washer for plug
23 Bell housing assembly
24 Stud for withdrawal race housing
25 Joint washer, bell housing to gearbox
26–27 Fixings for gearbox casing
30 Top cover for bell housing
31 Rubber seal for top cover
32 Centre for dust cover (early gearboxes)
33 Grommet for bell housing hole
34 Grommet for bell housing shaft

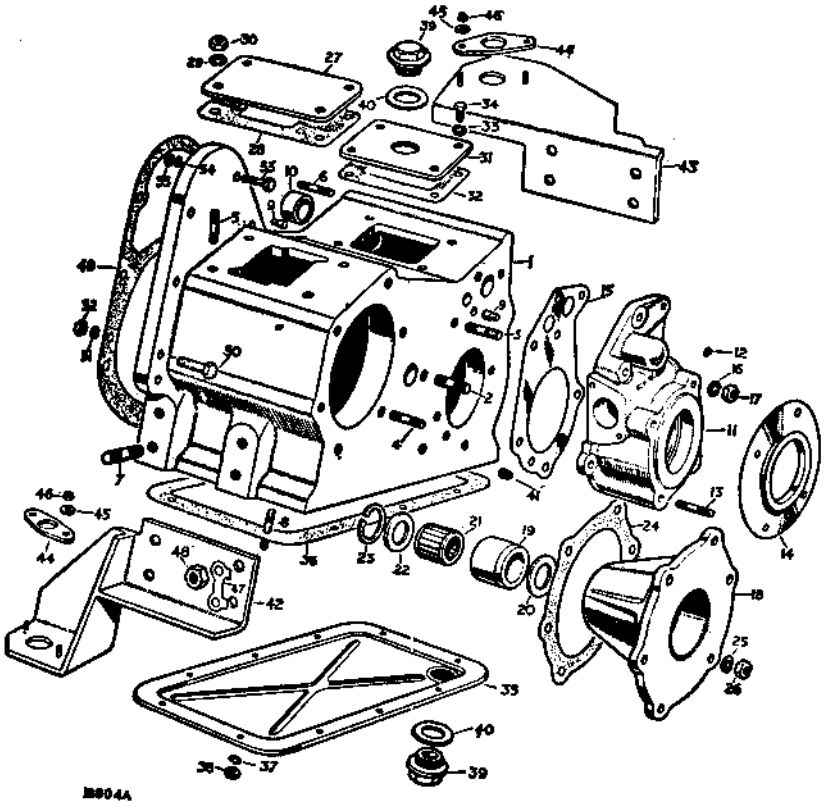

Fig. C1-3. Layout of the gearbox unit casings

### Key to illustration of gearbox casings

1 Transfer box casing assembly
2 Stud for intermediate shaft
3 Stud for speedometer housing, short
4 Stud for mainshaft housing
5 Stud for top cover plate
6 Stud, short, for transfer shaft housing
7 Stud for engine mounting
8 Stud for bottom cover
9 Dowel locating speedometer housing
10 Bush for shaft guide (early gearboxes)
11 Housing assembly for speedometer pinion
12 Insert for pinion
13 Stud for transmission brake
14 Mudshield or oil catcher and joint washer for housing
15 Shim for speedometer pinion housing
16–17 Fixings for housing
18 Housing assembly, rear mainshaft bearing
19 Bush for housing
20 Retaining plate, inner
21 Bearing for mainshaft
22 Retaining plate, outer
23 Circlip fixing bearing
24 Joint washer for bearing housing
25–26 Fixings for housing
27 Cover plate for P.T.O. selector
28 Joint washer for cover plate
29–30 Fixings for cover plate
31 Cover plate for transfer gear change
32 Joint washer for cover plate
33–34 Fixings for plate
35 Cover plate, bottom, for transfer box
36 Joint washer for bottom cover
37–38 Fixings for cover
39 Plug, top and bottom (top plug, early gearboxes)
40 Joint washer for plug
41 Oil level plug
42 Rear mounting foot LH
43 Rear mounting foot RH
44 Adjuster for mounting foot
45 Plain washer } For adjuster } early gearboxes
46 Self-locking nut
47–48 Fixings for feet
49 Joint washer, transfer box to gearbox
50–52 Fixings for transfer box
53–55 Fixings for transfer box

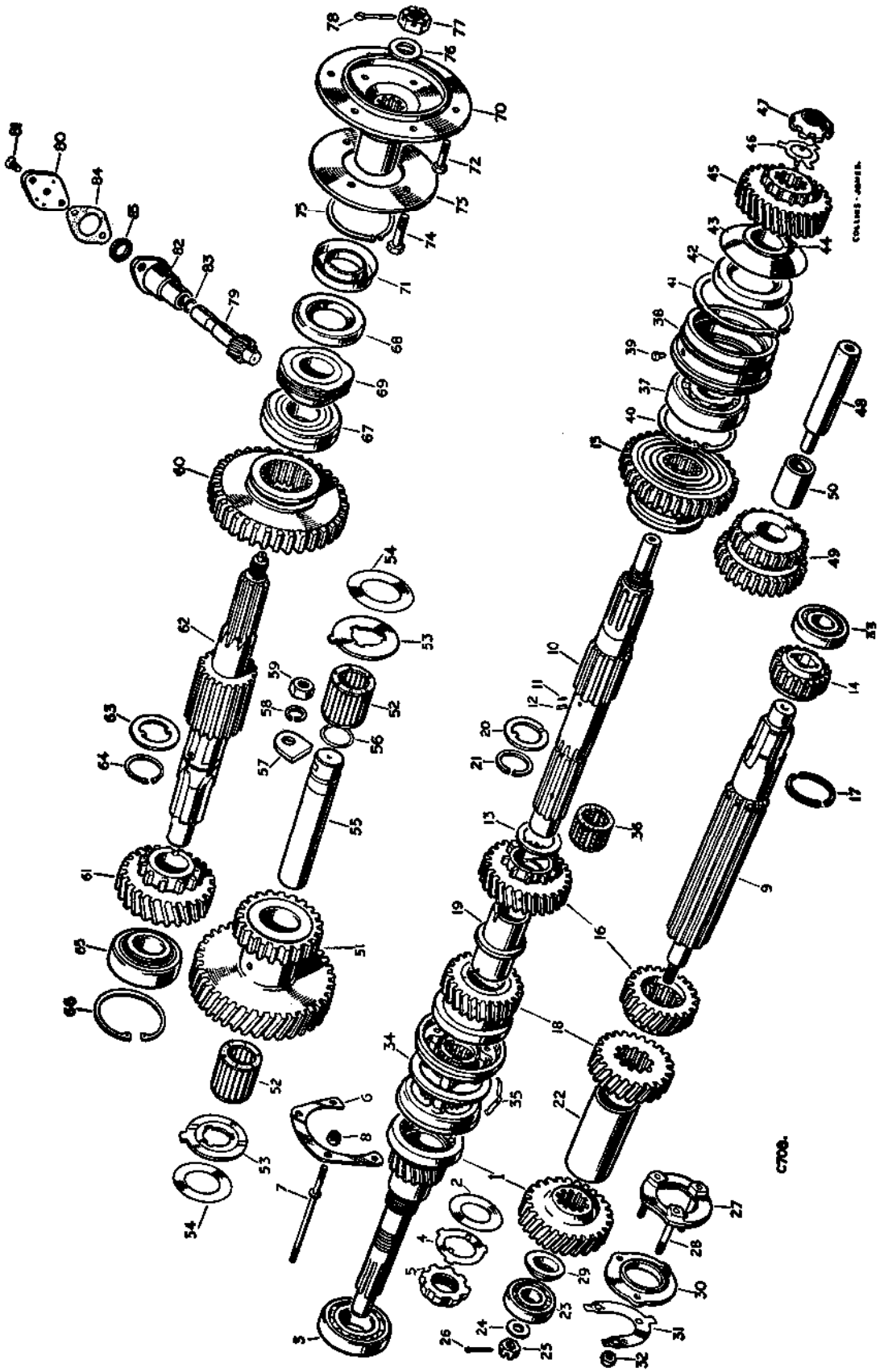

Fig. C1-4. Layout of the gearbox units: shafts and gears

## Key to illustration of gearbox shafts and gears

1 Primary pinion and constant gear
2 Shield for primary pinion
3 Ball bearing for primary pinion
4–5 Fixings for bearing
6–8 Fixings for bearing
9 Layshaft
10 Mainshaft
11 Peg for 2nd gear thrust washer
12 Peg for mainshaft distance sleeve
13 Thrust washer for 2nd speed gear
14 1st speed layshaft gear
15 1st speed mainshaft gear
16 2nd speed layshaft and mainshaft gea
17 Split ring for 2nd speed layshaft gear (early gearboxes)
18 3rd speed layshaft and mainshaft gear
19 Distance sleeve for mainshaft
20 Thrust washer for 3rd speed mainshaft gear
21 Spring ring fixing 2nd and 3rd mainshaft gears
22 Sleeve for layshaft
23 Bearing for layshaft, front
24–26 Fixings for bearing to layshaft
27 Bearing plate assembly for layshaft
28 Stud for bearing cap
29 Distance piece for layshaft
30 Retaining plate for layshaft front bearing
31–32 Fixings for cap and bearing
33 Bearing for layshaft, rear
34 Synchronising clutch
35 Detent spring for clutch
36 Roller bearing for mainshaft
37 Ball bearing for mainshaft
38 Housing for mainshaft bearing, rear
39 Peg, housing to casing
40 Circlip, bearing to housing
41 Circlip, housing to casing
42 Oil seal for rear of mainshaft
43 Oil thrower for mainshaft
44 Distance piece, rear of mainshaft
45 Mainshaft gear for transfer box
46–47 Fixings for gear
48 Shaft for reverse gear
49 Reverse wheel assembly
50 Bush for reverse wheel
51 Gear, intermediate
52 Roller bearing for intermediate gear
53 Thrust washer for intermediate gear
54 Shim for intermediate gear
55 Shaft for intermediate gear
56 Sealing ring for intermediate gear
57 Retaining plate for shaft
58–59 Fixings for plate
60 Low gear wheel
61 High gear wheel
62 Output shaft, rear drive
63 Thrust washer for high gear wheel
64 Circlip fixing washer to shaft
65 Bearing for output shaft, front
66 Circlip fixing bearing to case
67 Bearing for output shaft, rear
68 Oil seal for output shaft
69 Speedometer worm complete
70 Flange for output shaft, rear drive
71 Mudshield for flange
72 Fitting bolt for brake drum
73 Retaining flange for brake drum bolts
74 Fitting bolt for propeller shaft
75 Circlip retaining bolts and flange
76–78 Fixings for flange
79 Speedometer pinion
80 Retaining plate for pinion
81 Screw fixing plate to housing
82 Sleeve for pinion
83 Sealing ring for sleeve
84 Joint washer for sleeve
85 Oil seal for pinion

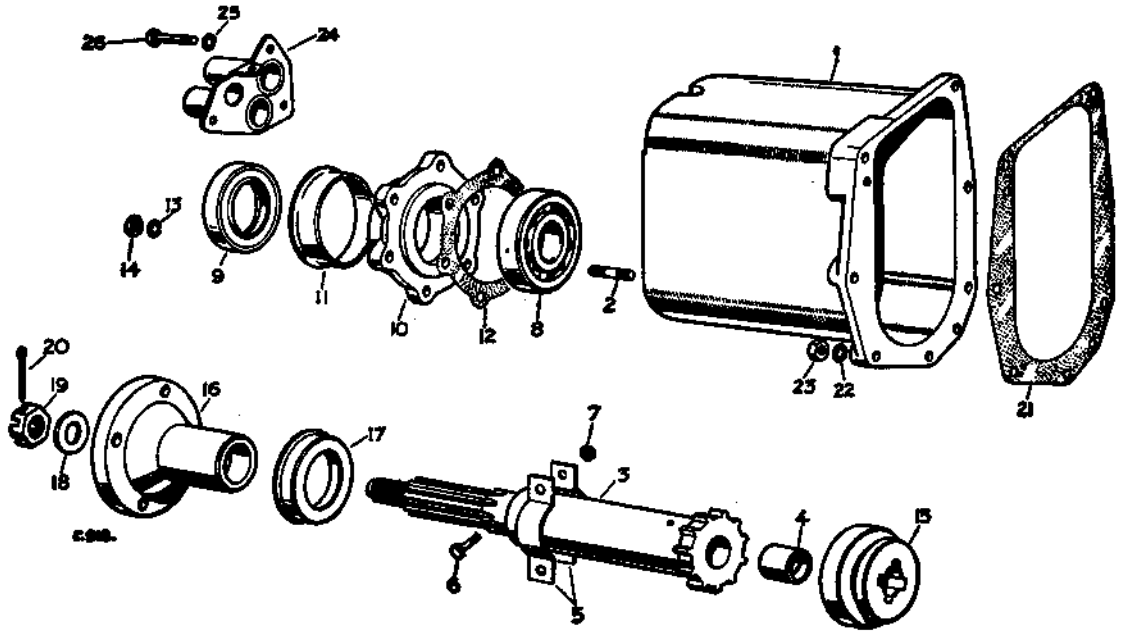

Fig. C1-5. Layout of the gearbox unit: four wheel drive, front output shaft and housing

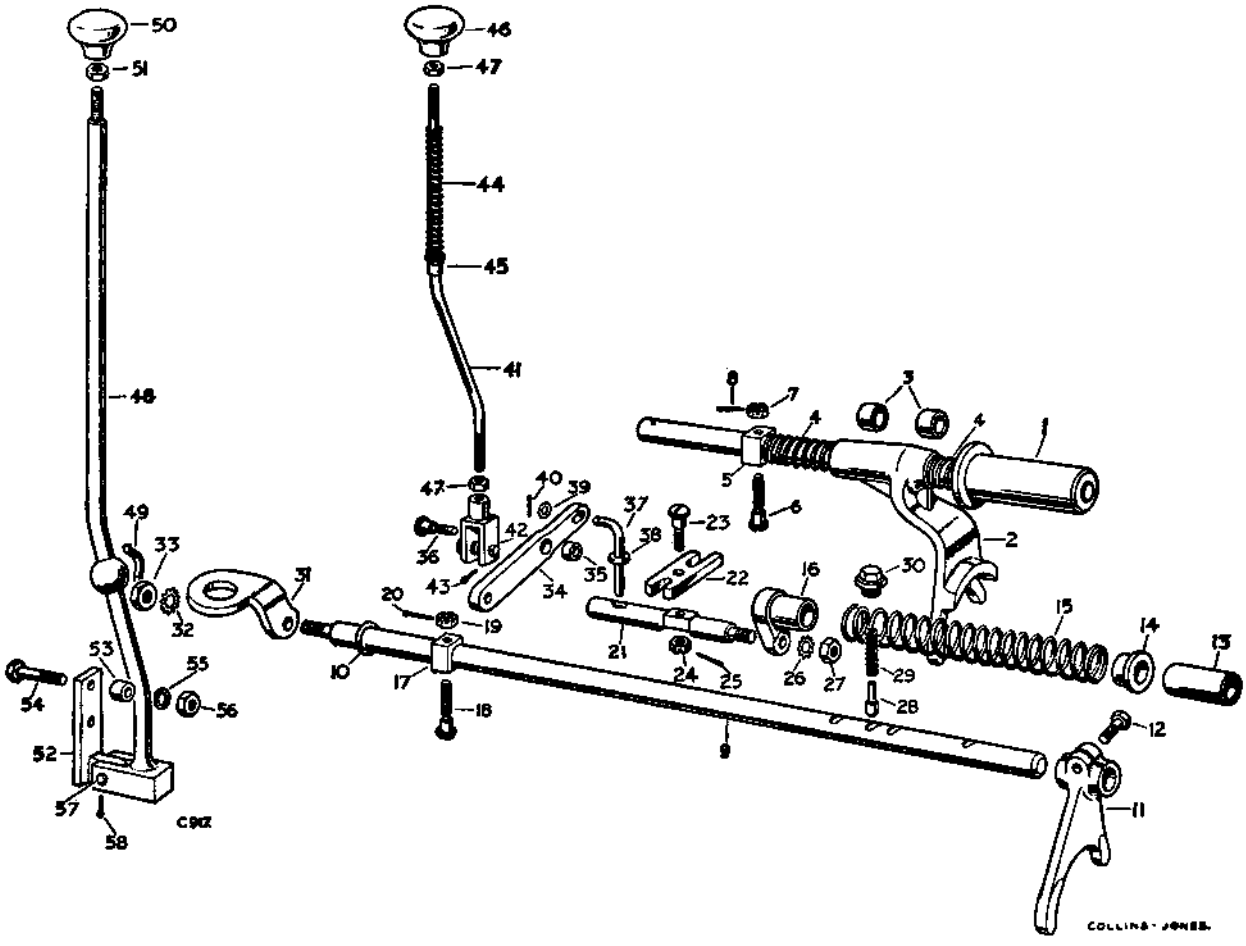

Fig. C1-6. Layout of the gearbox unit: four wheel drive and transfer gear controls

**Key to illustration of four wheel drive, transfer gear controls and front output shaft housing**

1 Output shaft housing assembly
2 Stud for oil seal retainer
3 Front output shaft assembly
4 Bush for shaft
5 Oil thrower for output shaft
6–7 Fixings for oil thrower
8 Bearing for front output shaft
9 Oil seal for shaft
10 Retainer for oil seal
11 Mudshield for retainer
12 Joint washer for retainer
13–14 Fixings for retainer
15 Locking dog, four wheel drive
16 Flange for transfer shaft
17 Mudshield for flange
18–20 Fixings for flange
21 Joint washer for transfer housing
22–23 Fixings for housing
24 Dust cover plate for selector shafts
25–26 Fixings for dust cover

1 Selector shaft, four wheel drive
2 Selector fork complete, four wheel drive
3 Bush for selector fork
4 Spring for selector fork
5 Block for selector shaft
6–8 Fixings for block
9 Selector shaft, transfer gear change
10 Sealing ring for transfer gear change shaft
11 Selector fork, transfer gear change
12 Set bolt fixing fork
13 Distance tube for transfer selector shaft
14 Locating bush for selector shaft spring
15 Spring for gear change selector shaft
16 Connector, gear change to pivot shaft
17 Block for selector shaft
18–20 Fixings for block
21 Pivot shaft for selector shafts
22 Coupling, selector shafts to pivot
23–25 Fixings for coupling
26–27 Fixings for pivot shaft
28 Plunger for transfer selector shaft
29 Spring for plunger
30 Plug
31 Link for selector shaft
32–33 Fixings for link
34 Lever assembly, four wheel drive
35 Bush for lever
36 Special bolt, lever to housing
37 Locking pin, four wheel drive lever
38 Sealing ring, four wheel drive locking pin
39–40 Fixings for locking pin
41 Selector rod, four wheel drive
42 Clevis complete for rod
43 Split pin for clevis
44 Spring for selector rod
45 Special bush for spring
46 Control knob for rod
47 Locknut for knob and clevis
48 Transfer gear change lever complete
49 Spring for transfer gear change lever
50 Knob for gear change lever
51 Locknut for knob
52 Bracket for gear change lever
53 Distance piece for bracket
54–56 Fixings for bracket
57–58 Fixings for gear lever

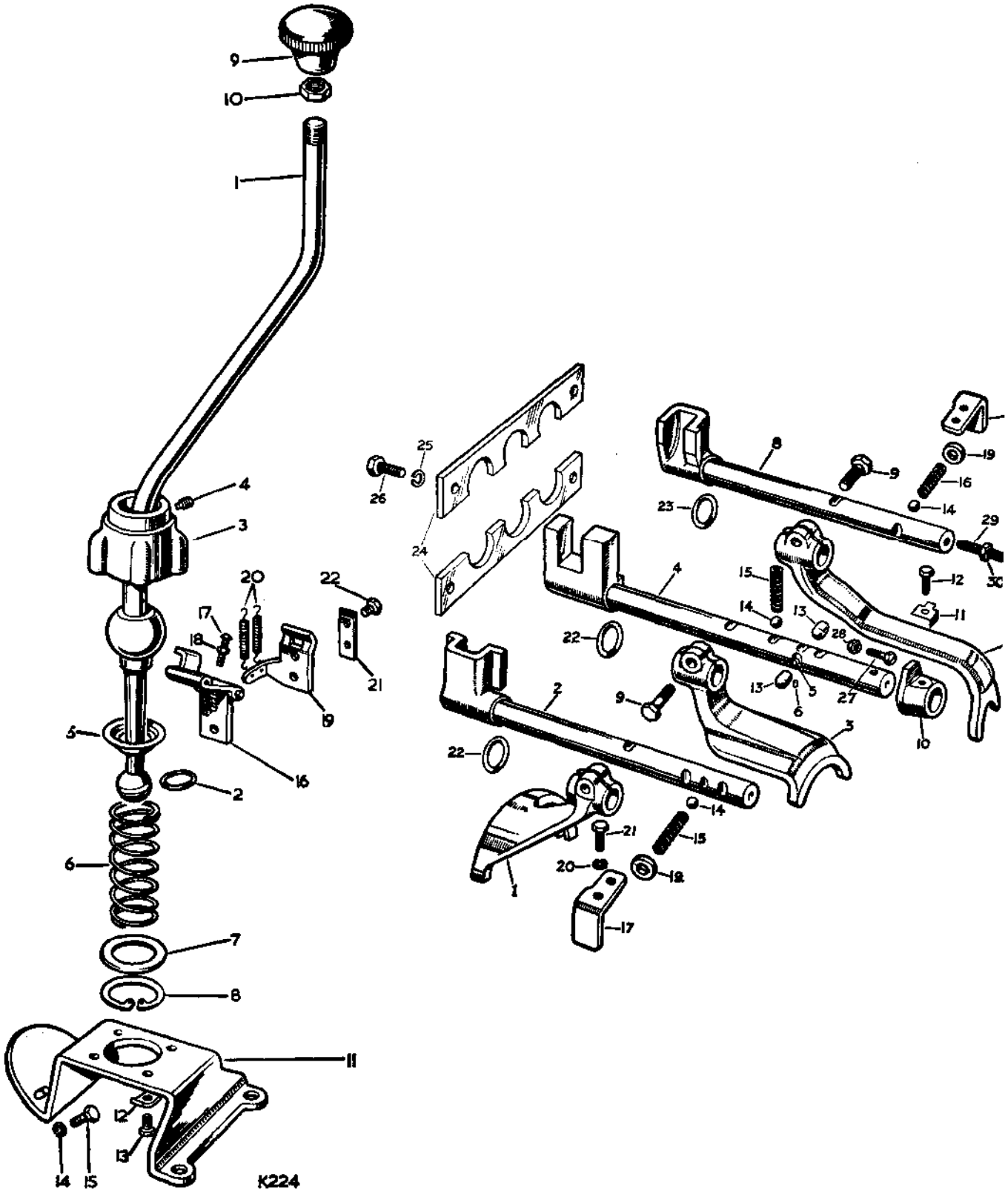


**Fig. C1-7. Layout of the gearbox unit: main gear change lever and selectors**

## Key to illustration of the main gear change lever and selectors

**Main gear change lever:**

1 Gear change lever
2 O-ring for lever
3 Housing for lever
4 Locating pin for lever ball
5 Spherical seat for gear lever
6 Retaining spring for lever
7 Retaining plate for spring
8 Circlip fixing retaining plate
9 Knob for lever
10 Locknut for knob
11 Mounting plate for gear change
12–13 Fixings for housing
14–15 Fixings for mounting plate
16 Reverse stop hinge complete
17 Adjusting screw } For hinge
18 Locknut }
19 Bracket for reverse stop spring
20 Spring for reverse stop
21–22 Fixtngs for hinge and bracket

**Gear selectors:**

1 Selector fork, 3rd and 4th speed
2 Shaft for fork, 3rd and 4th speed
3 Selector fork, 1st and 2nd speed
4 Shaft assembly for fork, 1st and 2nd speed
5 Interlocking pin
6 Peg fixing interlocking pin
7 Selector fork, reverse
8 Shaft for fork, reverse
9 Set bolt fixing forks to shafts
10 Stop for 2nd speed
11–12 Fixings for stop
13 Interlocking plunger
14 Steel ball for selectors
15 Selector spring, forward
16 Selector spring, reverse
17 Retaining plate LH } For selector springs, side
18 Retaining plate RH }
19 Rubber grommet }
20–21 Fixings for retaining plates
22 Seal for selector shafts
23 Seal for reverse shaft
24 Retaining plate for sealing ring
25–26 Fixings for retaining plate
27 Set bolt } In cover for 2nd gear stop
28 Locknut }
29 Adjustable stop for reverse selector shaft
30 Locknut for stop

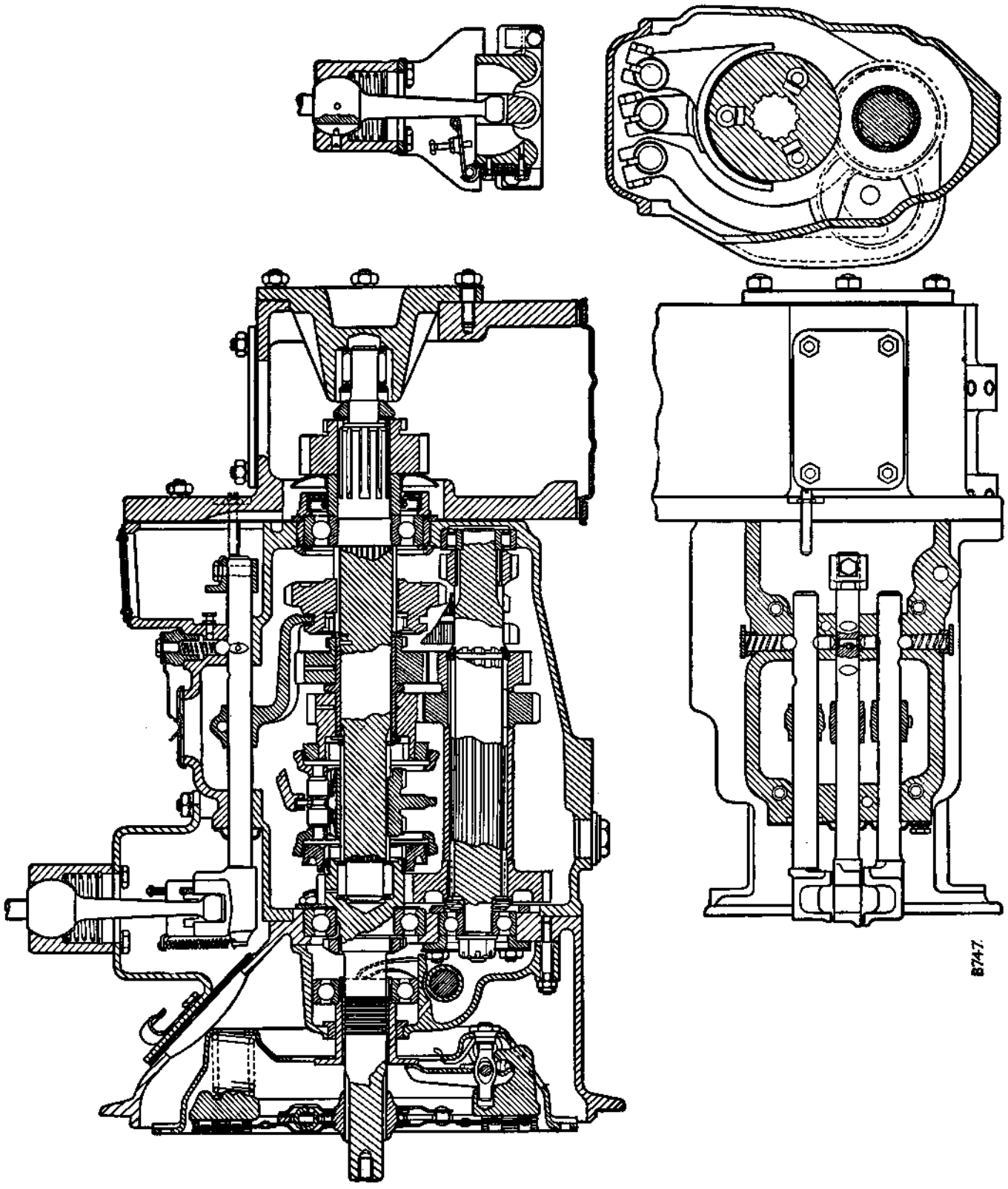


**Fig. C1-8. Cross-section of gearbox unit: elevation**

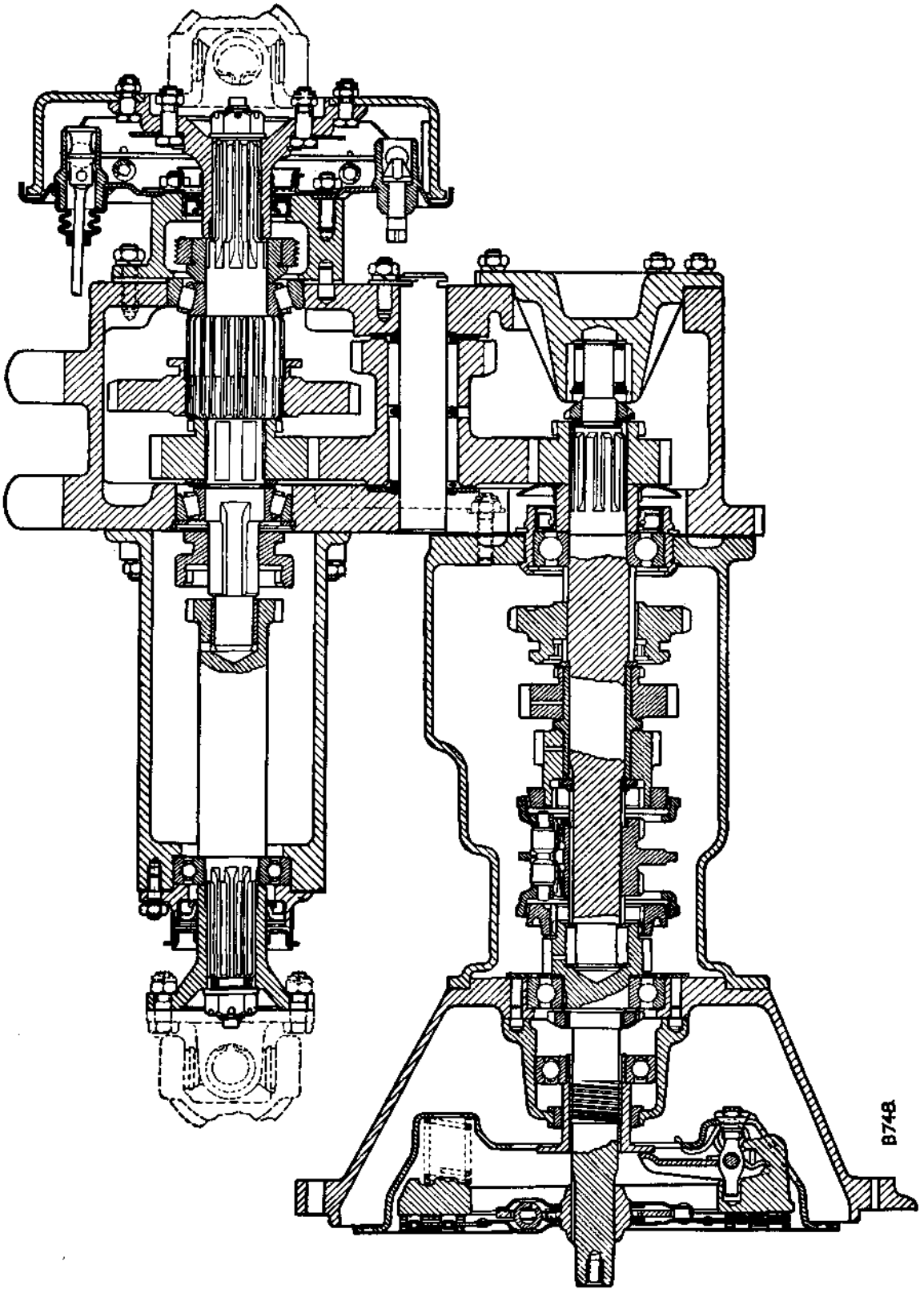


**Fig. C1-9. Cross-section of gear box unit: plan**

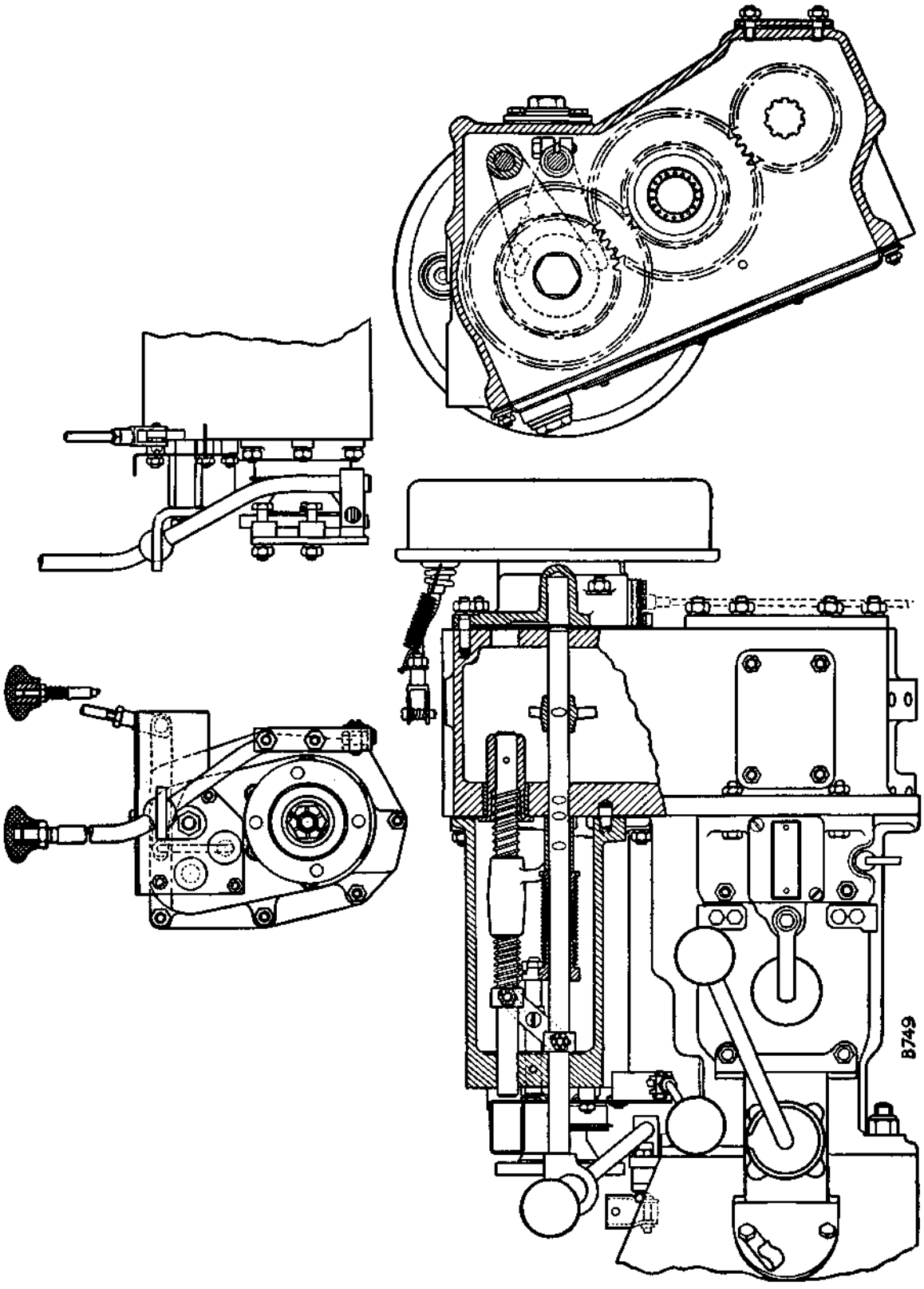


**Fig. C1-10. Cross-section of gearbox unit: controls**

# GEARBOX DESCRIPTION AND OPERATION

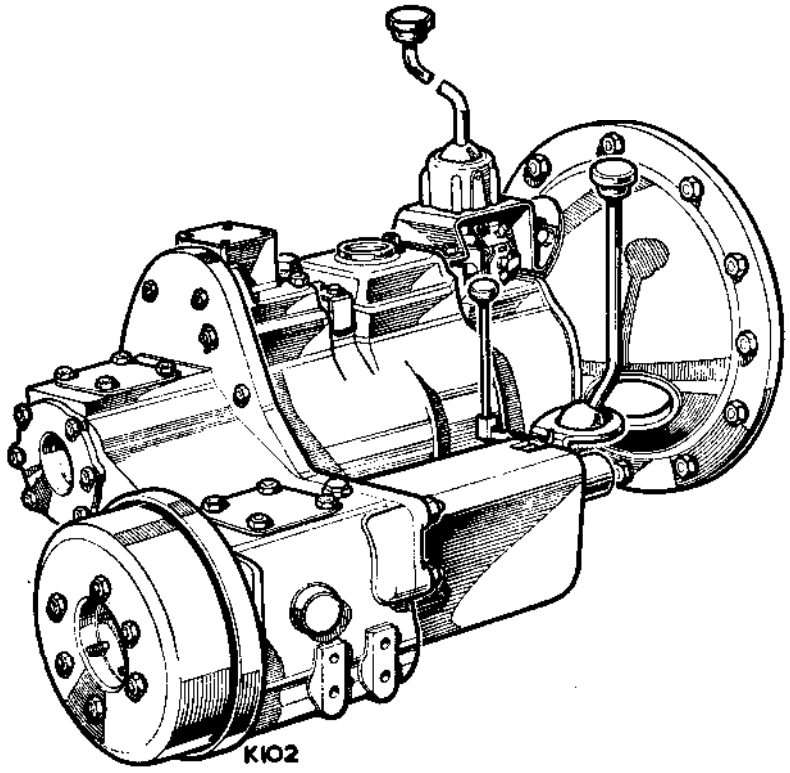


**Fig. C1-11. Gearbox assembly complete**

## 1. Description

The Land-Rover gearbox comprises three units. One, a main gearbox, which has four forward speeds and one reverse.

The gears are selected by the main lever which has a black knob.

To the rear end of the main gearbox is attached the second unit, a two speed transfer box; high or low range can be selected by the transfer gear lever which has a red knob. Use of these two ratios give a total of eight forward gears and two reverse.

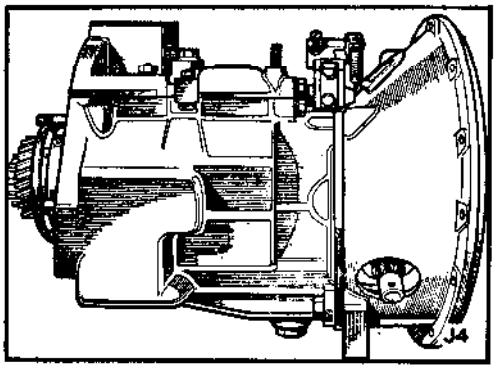


**Fig. C1-12. Main gearbox unit**

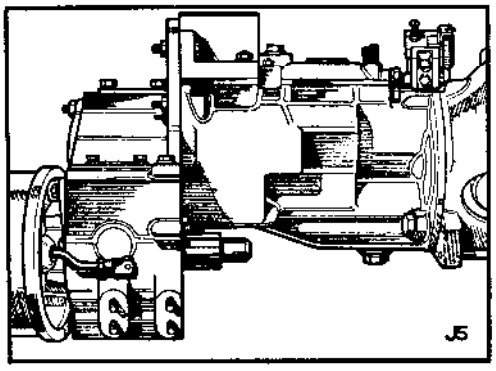


**Fig. C1-13. Transfer box, secured to rear of main gearbox**

The third unit is the four wheel drive selection mechanism attached to the front of the transfer box. Use of the lever with the yellow knob enables four wheel drive to be selected in high range. When low range is engaged by means of the transfer gear lever (red knob), four wheel drive is automatically selected through the same mechanism.

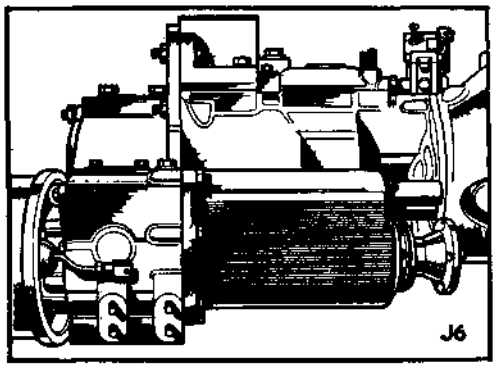


**Fig. C1-14. Four wheel drive output housing secured to the front of the transfer box**

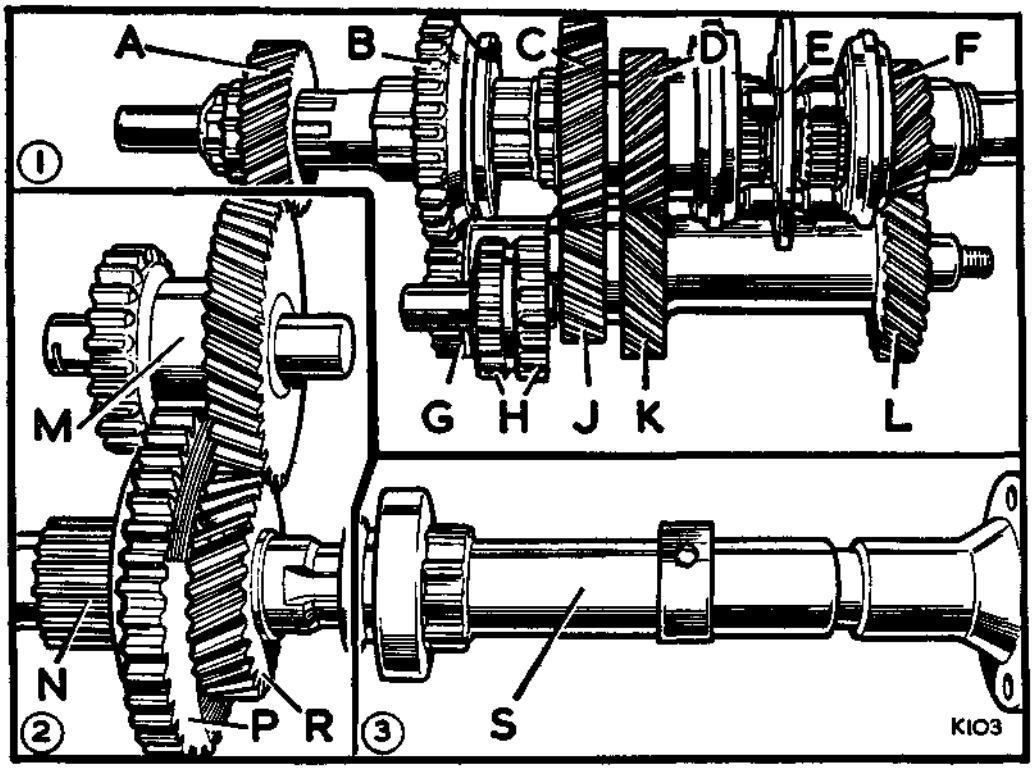


**Fig. C1-15. Arrangement of gears**

1—Main gear box 2—Transfer box 3—Four wheel drive output shaft

A—Mainshaft gear for transfer box
B—First speed mainshaft gear
C—Second speed mainshaft gear
D—Third speed mainshaft gear
E—Synchronising clutch
F—Primary pinion
G—First speed layshaft gear
H—Reverse gear
J—Second speed layshaft gear
K—Third speed layshaft gear
L—Constant gear
M—Intermediate gear
N—Output shaft, two wheel drive
P—Low gear wheel
R—High gear wheel
S—Output shaft, four wheel drive

2. **Operation**

**Power flow 1st, 2nd and 3rd gear, high range two wheel drive.** Input from the engine is via the primary pinion and constant gear to the layshaft, through layshaft to main shaft gears depending on gear selected, to main shaft gear in transfer box. Then through the intermediate gear to high gear wheel and output to rear axle only. The power flow in 2nd and 3rd follows the same general pattern, except that the 2nd and 3rd main shaft gears will be selected.

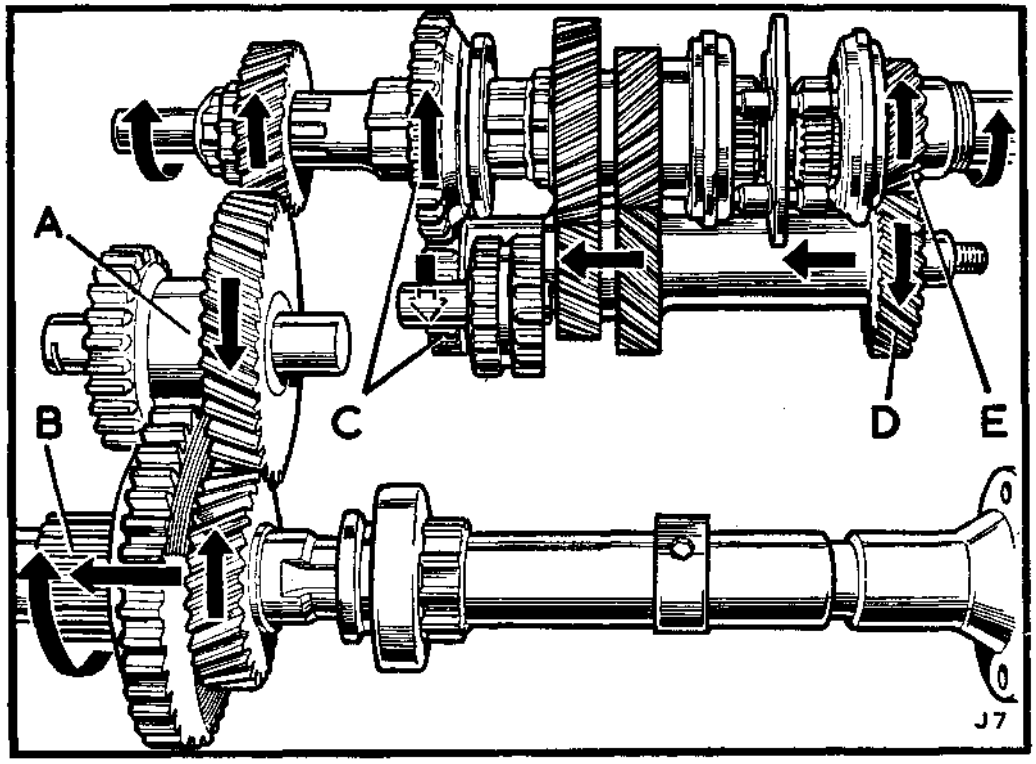


**Fig. C1-16. Power flow with first gear engaged, high ratio, two wheel drive**

A—Intermediate gear B—Output to rear axle C—Layshaft and mainshaft first gears D—Constant gear E—Primary pinion

**Power flow, top gear, high range, two wheel drive.** In this case input is direct from primary pinion to main shaft gear for transfer box. Then through the intermediate gear to high gear wheel and output to rear axle only.

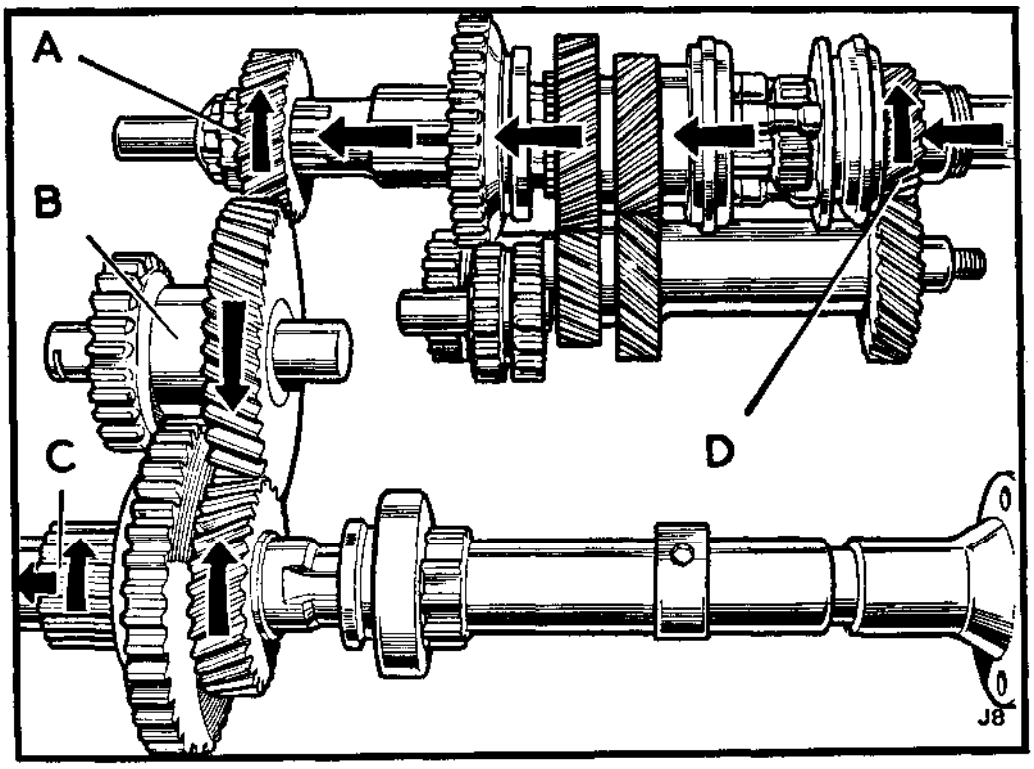


**Fig. C1-17. Power flow with top gear engaged, high ratio, two wheel drive**

A—Mainshaft gear B—Intermediate gear C—Output to rear axle D—Primary pinion

**Power flow reverse gear, high range, two wheel drive.**
Input from the engine is via the primary pinion and constant gear to the layshaft, through the layshaft to reverse idler, from reverse idler to mainshaft, this reverses direction of rotation of gears through transfer box. High or low range, two or four wheel drive can be selected as described previously.

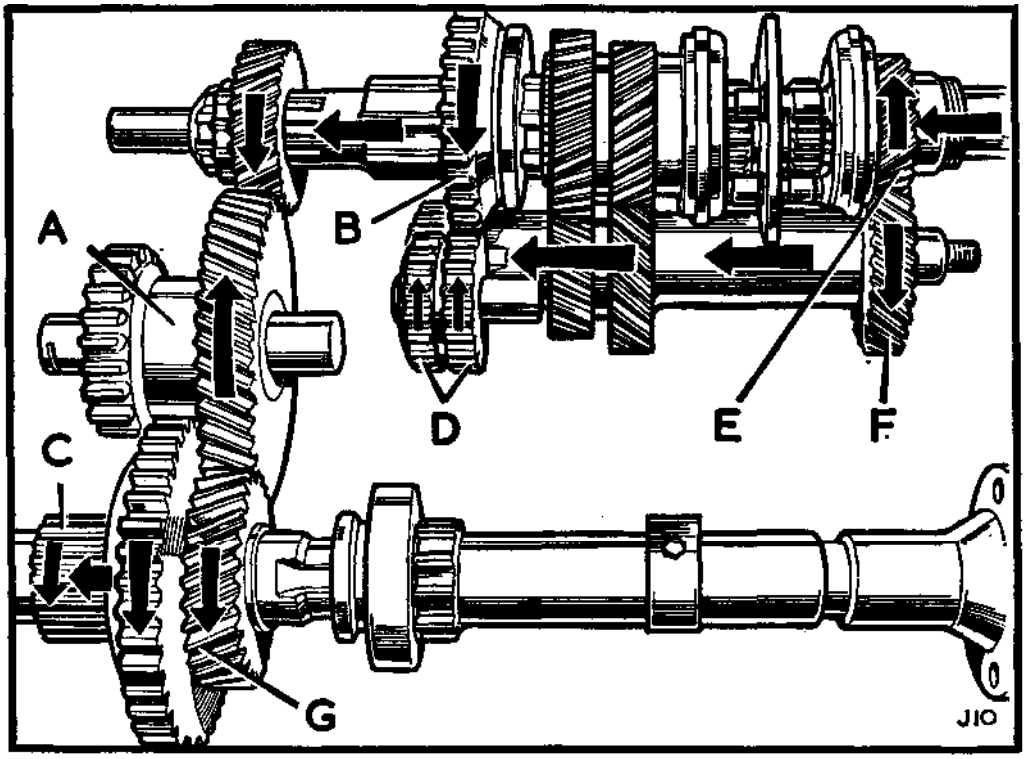


**Fig. C1-19. Power flow with reverse gear engaged, high ratio, two wheel drive**

A—Intermediate gear
B—Mainshaft first gear
C—Output to rear axle
D—Reverse idler
E—Primary pinion
F—Layshaft constant gear
G—High gear wheel

**Power flow, low range, four wheel drive.** Input from the engine is via the primary pinion and constant gear to the layshaft, through layshaft to mainshaft gears depending on gear selected to main shaft gear for transfer box. Then through the intermediate gear to low gear wheel and with locking dog for four wheel drive engaged, output to both front and rear axles.

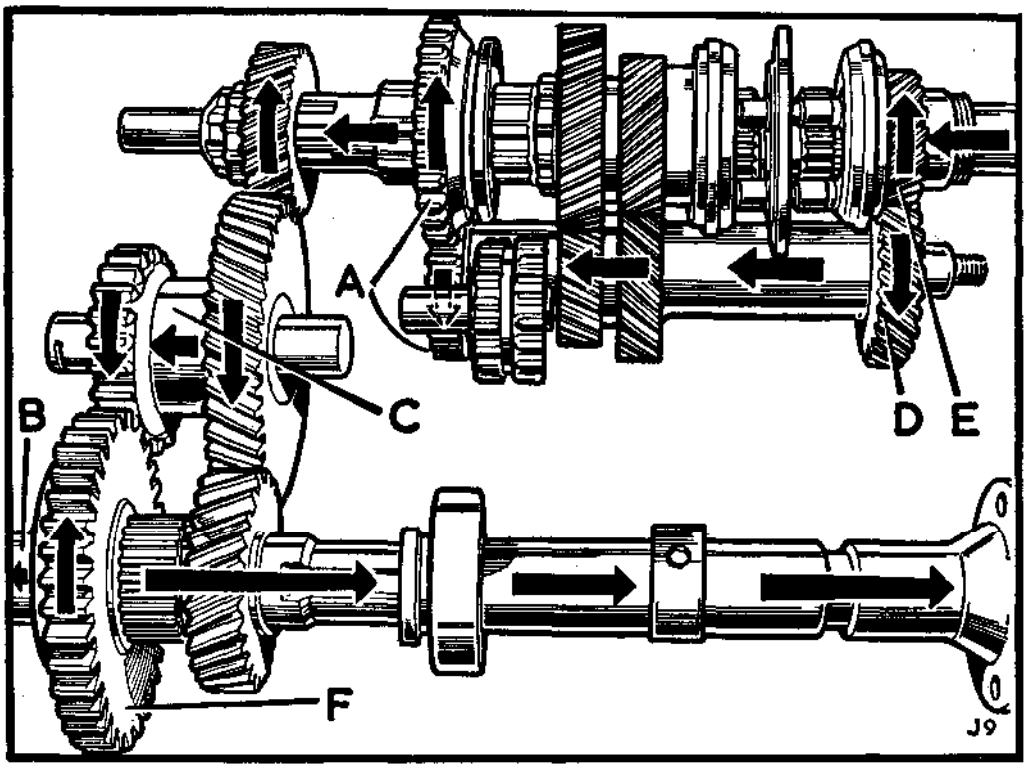


**Fig. C1-18. Power flow with first gear engaged, low ratio, four wheel drive**

A—Layshaft and mainshaft first gears
B—Output to rear axle
C—Intermediate gear
D—Constant gear
E—Primary pinion
F—Low gear wheel

## Seat base, remove and refit—Operation C1-1

Workshop hand tools:
Spanner sizes: $\frac{7}{16}$ in. AF, $\frac{9}{16}$ in. AF open end

### To remove

1. Remove the front floor. Operation A1-4.
2. Lift out the seat cushions.
3. Release the seat squab retaining straps from the support rail.

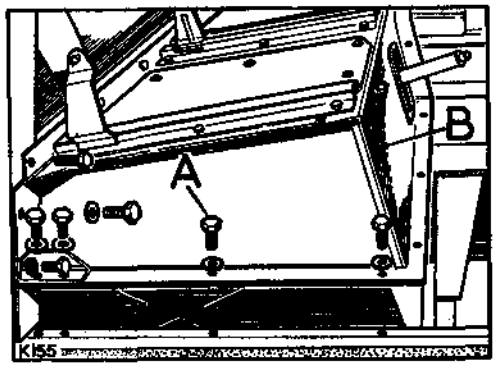


**Fig. C1-20. Seat base**

A—Fixings (23 off) B—Seat base

4. From under the vehicle, remove the two nuts and spring washers securing the hand brake lever to the chassis.

**Note:** The foregoing operation facilitates seat base removal by allowing the hand brake lever to be manoeuvred, but is not necessary on early models fitted with a short horizontal hand brake lever.

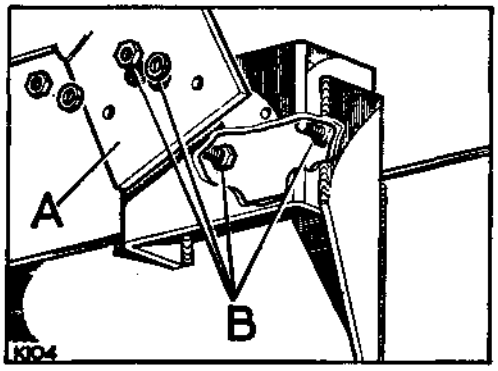


**Fig. C1-21. Hand brake lever fixings**

A—Mounting bracket for hand brake lever
B—Fixings, hand brake lever to chassis

5. Remove the seat base fixings.
6. Lift out the seat base complete, manoeuvring the hand brake lever through the aperture in the base front.

### To refit

Reverse the removal procedure, using waterproof sealant between the joint flanges of the seat base and body. A suitable sealant is 'Sealastrip' manufactured by Expandite Ltd, Chase Road, London, NW 10.

Adjust the four wheel drive control lever. Operation A1-4.

## *Gearbox lubrication, draining and refilling—Operation C1-2

Workshop hand tools:
Spanner sizes: $\frac{1}{2}$ in. AF, $\frac{13}{16}$ in. AF open end

For the purpose of lubrication, the gearbox assembly is divided into two units. The main gearbox and clutch withdrawal mechanism are lubricated as one unit, and the transfer box and four wheel drive output shaft housing are lubricated as a separate unit.

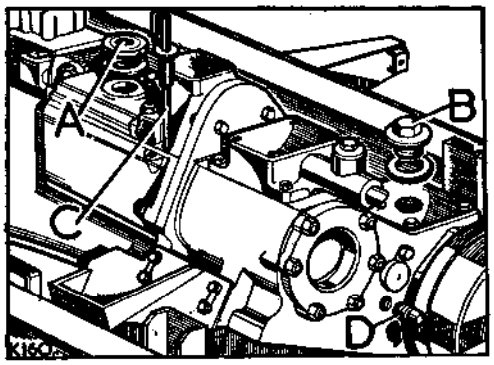


**Fig. C1-22. Oil filler and level plugs (early gearboxes)**

A—Filler cap, main gearbox section
B—Filler plug, transfer box section
C—Oil level dipstick, main gearbox
D—Oil level plug, transfer box

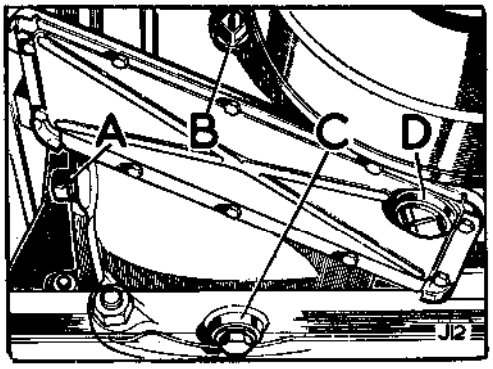


**Fig. C1-23. Oil filler/level plugs (latest gearboxes), and drain plugs for all gearboxes**

A—Filler level/plug main gearbox section
B—Filler level/plug, transfer box section
C—Drain plug, main gearbox section
D—Drain plug, transfer gearbox section

### To drain

1. Place a suitable container beneath the gearbox.
2. Remove the drain plugs from the main gearbox and the transfer box.
3. Allow all the oil to drain, then replace both plugs together with joint washers.

### To top up or refill

1. Remove the filler cap and/or plugs, as applicable.
2. Using the correct grade of lubricating oil, see Section X, fill the main gearbox to the 'H' mark on the dipstick or to the level plug hole, as applicable. Fill the transfer box to the level plug hole. Replace the dipstick and the filler and level plugs.

### Capacities

Main gearbox: $2\frac{1}{2}$ imperial pints, 3 U.S. pints, 1,5 litres.
Transfer box: $4\frac{1}{2}$ imperial pints, $5\frac{1}{2}$ U.S. pints 2,5 litres.

### Gearbox breather

A breather hole is incorporated in the inspection cover for the selector shaft stops. The one breather hole provides for the complete gearbox assembly through internal communicating passages.

Ensure that the breather hole is clear, a blocked breather could cause failure of the gearbox oil seals.

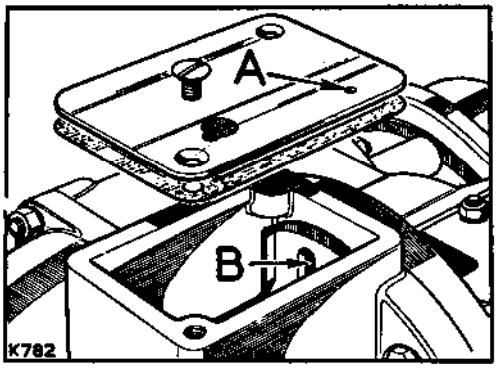


**Fig. C1-24. Gearbox breather**

A—Breather hole
B—Passage to transfer box

*Operations marked with an asterisk (*) can be carried out with the gearbox installed in the vehicle*

## Gearbox assembly complete, remove and refit—Operation C1-3

Workshop hand tools:
Spanner sizes:
2 BA, $\frac{1}{4}$ in. BSF, $\frac{5}{16}$ in. BSF, $\frac{3}{8}$ in. BSF, $\frac{3}{16}$ in. AF sockets, $\frac{1}{4}$ in. AF, $\frac{5}{16}$ in. AF open end Pliers

### To remove

1. Remove the front floor. Operation A1-4.
2. Remove the seat base. Operation C1-1.
3. Drain the gearbox lubricating oil. Operation C1-2.

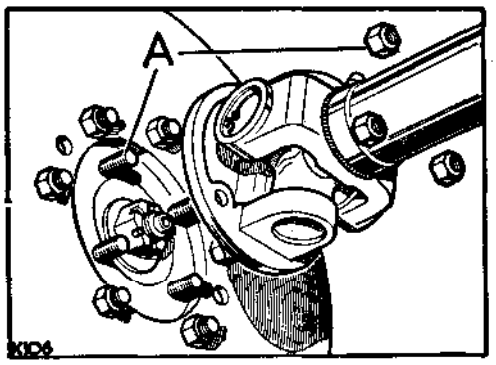


**Fig. C1-25. Propeller shaft for rear axle**

A—Fixings at coupling flanges

4. Disconnect the rear propeller shaft and move it clear of the gearbox.
5. Disconnect the front propeller shaft from the gearbox.

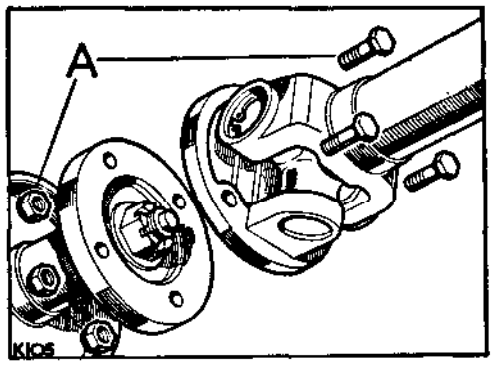


**Fig. C1-26. Propeller shaft for front axle**

A—Fixings at gearbox coupling flange

**Note:** If the vehicle is fitted with any optional equipment driven from the gearbox, it must be disconnected at the gearbox. Refer to separate publication for details of optional equipment.

6. Disconnect the hand brake expander rod from the relay lever.

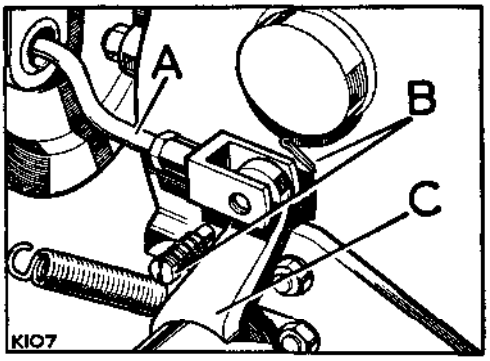


**Fig. C1-27. Transmission brake**

A—Expander rod
B—Fixings, expander rod to relay lever
C—Relay lever

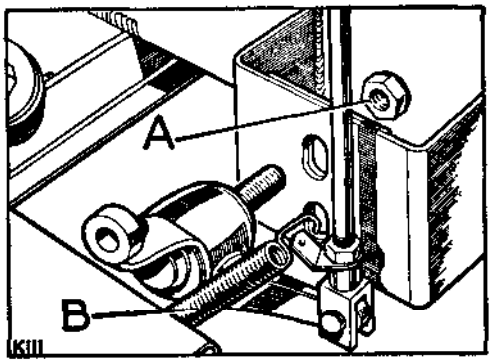


**Fig. C1-28. Transmission brake lever and relay lever fixings**

A—Fixings, relay mechanism to chassis
B—Return spring, transmission brake

7. Remove the transmission brake lever and relay mechanism.
8. LHStg models only. Remove the brake lever cross-shaft.
9. Disconnect the speedometer cable from the gearbox.

## Operation C1-3—*continued*

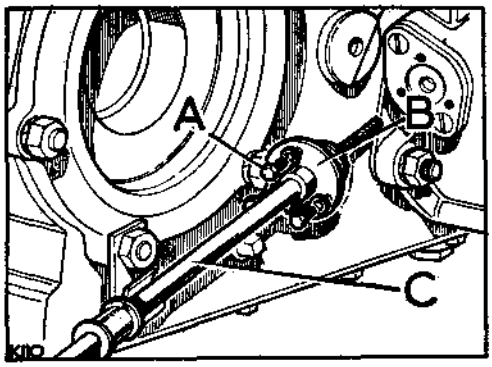


**Fig. C1-29. Speedometer cable connection at gearbox**

A—Fixings, speedometer cable to gearbox
B—Retaining plate for cable
C—Speedometer cable

**Note:** On certain models, the engine exhaust pipe is located above the gearbox left hand rear mounting, and where applicable, the exhaust pipe must be moved clear. Also check the location of the engine earth strap, on certain models it is fitted between the gearbox and chassis and must therefore be disconnected.

10. Remove the fixings from two rear mountings for the gearbox.

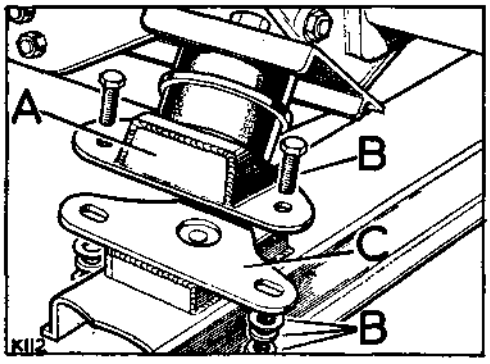


**Fig. C1-30. Gearbox rear mountings**

A—Rear mounting
B—Fixings, rear mounting to chassis
C—Chassis

**Note:** On certain models, a tie rod is fitted between the gearbox and chassis, and where applicable, release the bracket at the bell housing and move the tie rod clear.

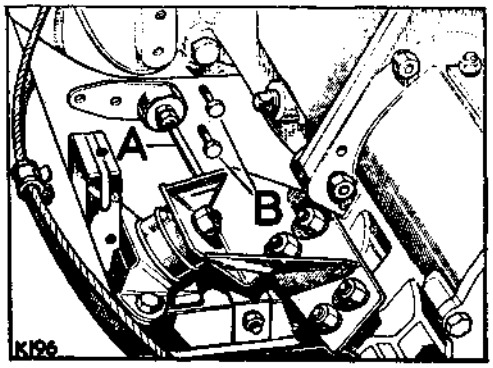


**Fig. C1-31. Gearbox tie rod**

A—Tie rod assembly
B—Fixings tie rod to bell housing

11. Disconnect the clutch cross-shaft.
12. Release the bracket for the clutch slave cylinder from the bell housing. Withdraw the slave cylinder, bracket and cross-shaft assembly, and retain at the side of the engine without straining the flexible pipe.

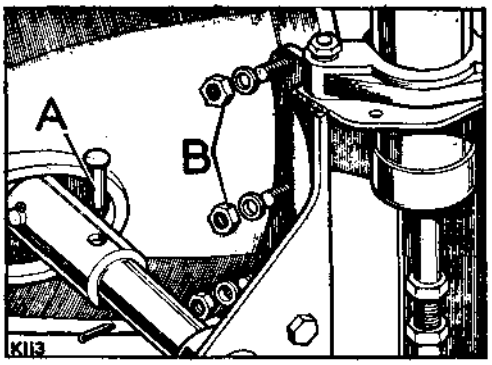


**Fig. C1-32. Clutch cross-shaft and slave cylinder**

A—Fixings, cross-shaft to connecting tube
B—Fixings, slave cylinder to bell housing

## Operation C1-3—*continued*

13. Jack up the rear of the engine sufficient to insert a 1 inch (25 mm) thick block of wood between the flywheel housing and chassis, to retain the engine position when the gearbox is removed.
14. Place a suitable sling around the gearbox and tension it sufficient to take the weight.

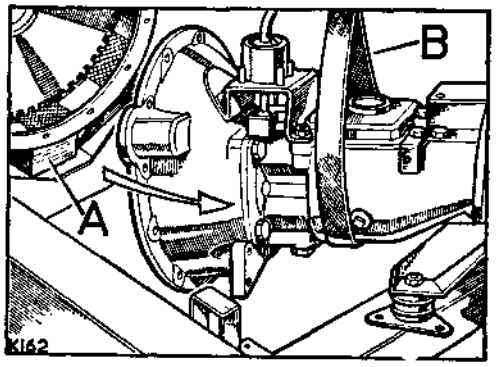


**Fig. C1-33. Removing the gearbox**

A—Wood block supporting engine
B—Sling

15. Remove the remaining nine nuts and plain washers securing the bell housing to the flywheel housing.
16. Carefully withdraw the gearbox rearwards clear of the clutch and lift from the vehicle.

### To refit

1. Engage 4th gear and check that the primary pinion can be rotated by turning the transmission brake drum.
2. Place a suitable sling around the gearbox and lower it into position, carefully aligning the spline location between the primary pinion and clutch.
3. Secure the gearbox to the engine using nine of the bell housing fixings, leaving the three for the clutch slave cylinder mounting till later.
4. Locate the clutch slave cylinder, bracket and cross-shaft assembly in position and attach the cross-shaft to the connecting tube, then secure the slave cylinder bracket to the bell housing.

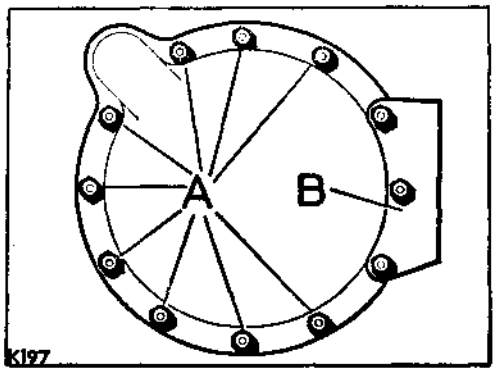


**Fig. C1-34. Bell housing fixings**

A—Fixings, bell housing to engine
B—Fixings, clutch slave cylinder mounting

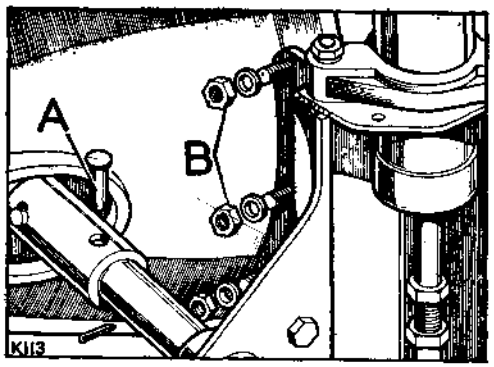


**Fig. C1-35. Clutch cross-shaft and slave cylinder**

A—Fixings, cross-shaft to connecting tube
B—Fixings, slave cylinder to bell housing

5. Jack up the rear end of the engine sufficient to remove the block of wood previously fitted between the flywheel housing and chassis.
6. Secure the gearbox rear mountings.

## Operation C1-3—*continued*

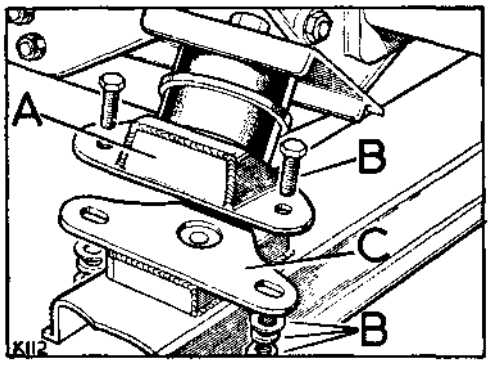


**Fig. C1-36. Gearbox rear mountings**

A—Rear mounting
B—Fixings, rear mountings to chassis
C—Chassis

7. If removed, fit the tie rod between the bell housing and chassis, see Fig. C1-31.
8. If removed, refit the exhaust pipe.
9. Connect the speedometer cable to the gearbox, see Fig. C1-29.
10. LHStg models only. Fit the hand brake cross-shaft.
11. Fit the hand brake lever and relay mechanism, see Fig. C1-28.
12. Connect the hand brake expander rod to the relay lever, see Fig. C1-27.
13. Reconnect the front propeller shaft, see Fig. C1-26.
14. Fit the rear propeller shaft.
15. Complete the reassembly by reversing the removal procedure.
16. Check and replenish the gearbox lubricating oil. Also ensure that the gearbox breather is clear, Operation C1-2.
17. Check and adjust the transmission brake. See Section H.
18. If necessary bleed the clutch system and adjust the pedal movement. See Section B.
19. Adjust the four wheel drive control lever. Operation A1-4.

## *Transmission brake, remove and refit—Operation C1-4

*(For overhaul instructions, refer to section H)*

Workshop hand tools:
Spanner sizes: $\frac{3}{8}$ in. BSF, $\frac{5}{8}$ in. BSF sockets, $\frac{9}{16}$ in. AF open end
Pliers

### To remove

1. Drain the lubricating oil from the transfer box. Operation C1-2.
2. Disconnect the rear propeller shaft, and move it clear of the transmission brake.

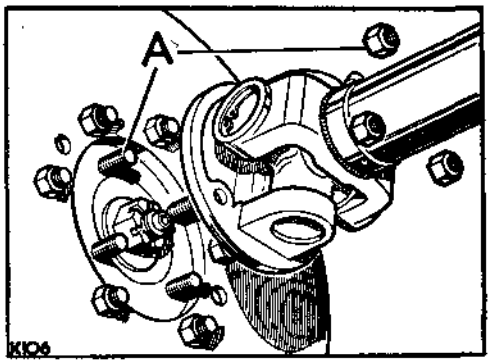


**Fig. C1-37. Propeller shaft for rear axle**

A—Fixings at coupling flanges

3. Disconnect the hand brake expander rod from the relay lever, and slacken the brake adjuster.

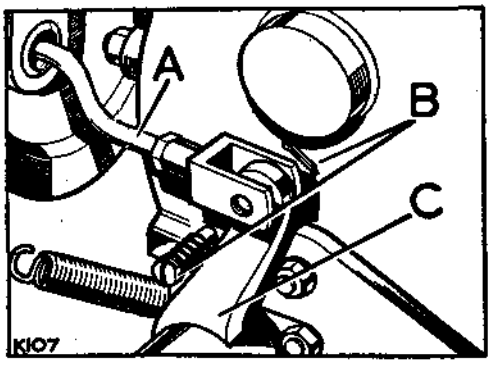


**Fig. C1-38. Coupling, relay lever to expander rod**

A—Expander rod
B—Fixings, expander rod to relay lever
C—Relay lever

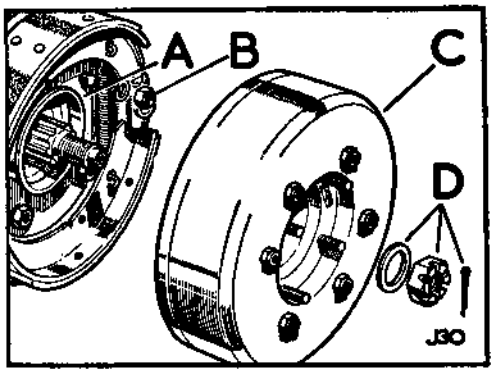


**Fig. C1-39. Output drive flange and brake drum**

A—Brake anchor plate
B—Fixings, brake anchor plate
C—Output flange and brake drum assembly
D—Fixings, output flange and brake drum

4. Remove the output flange and brake drum assembly.
5. Remove the brake anchor plate together with the oil catcher, or mud shield, as applicable.

**Note:** The oil catcher and joint washer prevent any oil leakage from the speedometer drive housing reaching the transmission brake, and can be fitted to earlier gearboxes in place of the mud shield inner member.

### To refit

1. If an oil catcher is fitted, apply jointing compound to both sides of the joint washer.

*Operations marked with an asterisk (*) can be carried out with the gearbox installed in the vehicle*

## Operation C1-4—*continued*

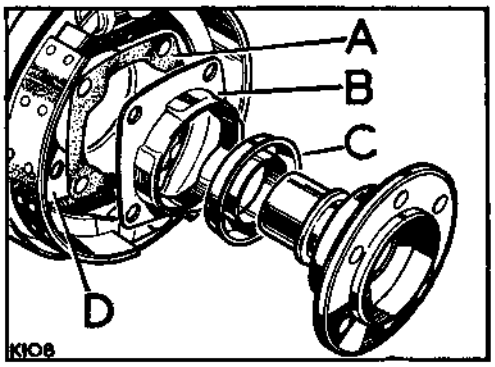


**Fig. C1-40. Oil catcher for transmission brake**

A—Joint washer for oil catcher
B—Oil catcher
C—Mud shield for flange
D—Brake anchor plate

2. Fit the brake anchor plate and connect the expander rod to the relay lever.
3. Fit the output flange and brake drum. The output flange securing nut is tightened to a torque figure of 85 lb/ft (11,75 mkg).
4. Adjust the transmission brake, see Section H.
5. Fit the propeller shaft.
6. Replenish the transfer box lubricating oil. Operation C1-2.

## *Speedometer drive housing, remove and refit—Operation C1-5

*(For overhaul Instructions, Operation C1-6 refers)*

Workshop hand tools:
Spanner sizes: 2 BA, $\frac{3}{8}$ in. BSF sockets

### To remove

1. Remove the transmission brake. Operation C1-4.
2. Disconnect the speedometer cable from the gearbox.

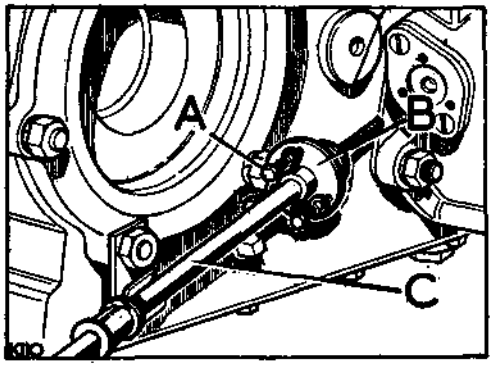


**Fig. C1-41. Speedometer cable connection at gearbox**

A—Fixings, speedometer cable to gearbox
B—Retaining plate for cable
C—Speedometer cable

3. Remove the speedometer drive housing complete with shims.
4. Withdraw the speedometer drive worm.

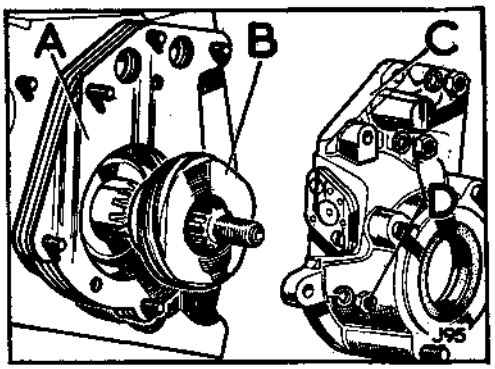


**Fig. C1-42. Speedometer drive assembly**

A—Shims
B—Drive worm
C—Speedometer drive housing
D—Fixings, speedometer housing to transfer box

### To refit

Reverse the removal procedure.

Check and if necessary, replenish the gearbox lubricating oil. Operation C1-2.

*Operations marked with an asterisk (*) can be carried out with the gearbox installed in the vehicle*

## *Speedometer drive housing, overhaul—Operation C1-6

*(For removal and refitting instructions, Operation C1-5 refers)*

Workshop hand tools
Screwdriver (medium)

### To dismantle

1. Remove the speedometer pinion.

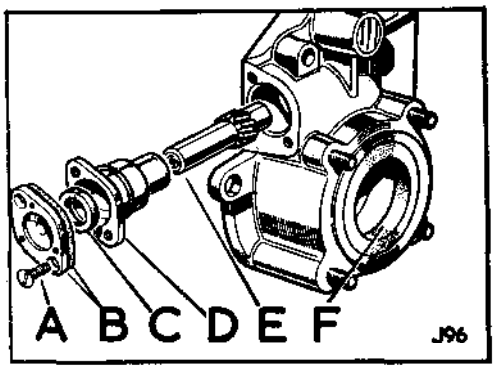


**Fig. C1-43. Speedometer drive and housing**

A—Fixings, pinion retaining plate
B—Retaining plate and gasket
C—Oil seal for pinion
D—Sleeve for pinion
E—Speedometer pinion
F—Oil seal for output shaft

2. Remove the oil seal and rubber 'O' ring from the sleeve.
3. Remove the output shaft oil seal from the speedometer housing.

### Inspection

Examine the pinion teeth and the speedometer drive worm for wear.

Check the sleeve which should be a slide fit on the pinion.

### To assemble

1. Fit the oil seal, lipped side inwards, and 'O' ring to the sleeve.
2. Fit the pinion and sleeve, ensuring that the relieved face on the sleeve will be towards the speedometer drive worm when assembled.

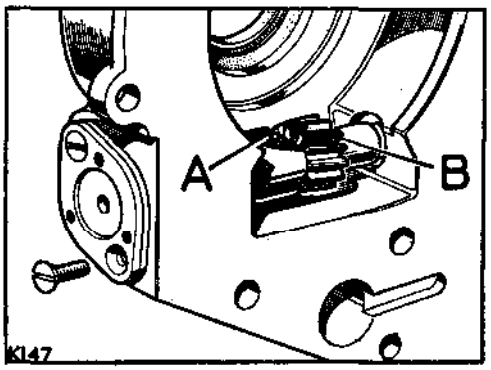


**Fig. C1-44. Alignment of sleeve for pinion**

A—Relieved face on sleeve
B—Drive worm

3. Fit the output shaft oil seal, lipped side inward, using jointing compound on the seal outer diameter. The housing may be warmed to facilitate assembly.

*Operations marked with an asterisk (*) can be carried out with the gearbox installed in the vehicle*

## *Transfer box, remove and refit—Operation C1-7

*(For overhaul instructions, Operation C1-8 refers)*

Workshop hand tools:
Spanner sizes: $\frac{1}{2}$ in. AF, $\frac{9}{16}$ in AF, $\frac{13}{16}$ in. AF open end
2 BA, $\frac{1}{4}$ in. BSF, $\frac{5}{16}$ in. BSF, $\frac{3}{8}$ in BSF sockets
Pliers

Special tools:
Tool for withdrawing intermediate shaft, Part Number 605862

### To remove

1. Remove the front floor. Operation A1-4.
2. Remove the seat base. Operation C1-1.
3. Drain the gearbox lubricating oil. Operation C1-2.
4. Remove the transmission brake. Operation C1-4.

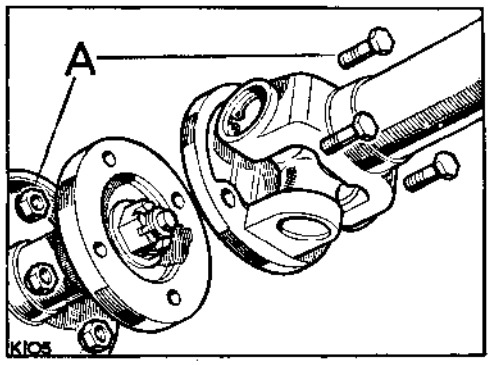


**Fig. C1-45. Propeller shaft for front axle**
A—Fixings at gearbox coupling flange

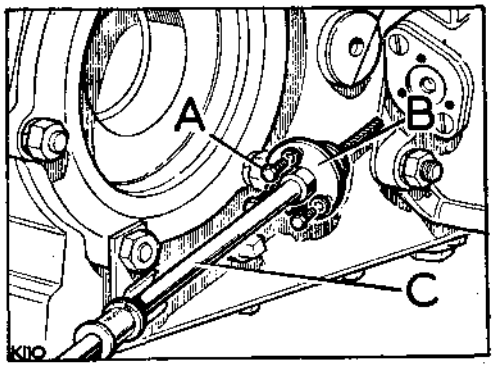


**Fig. C1-46. Speedometer cable connection at gearbox**
A—Fixings, speedometer cable to gearbox
B—Retaining plate for cable
C—Speedometer cable

5. Disconnect the front propeller shaft from the gearbox.

**Note:** If the vehicle is fitted with any optional equipment driven from the transfer box, it must be disconnected at the transfer box. Refer to separate publication for details of optional equipment.

6. Disconnect the speedometer cable from the gearbox.
7. Disconnect the transfer gear lever from the bracket at the bell housing, withdraw the lever, taking care to retain the spring strip, located between the lever ball and link.

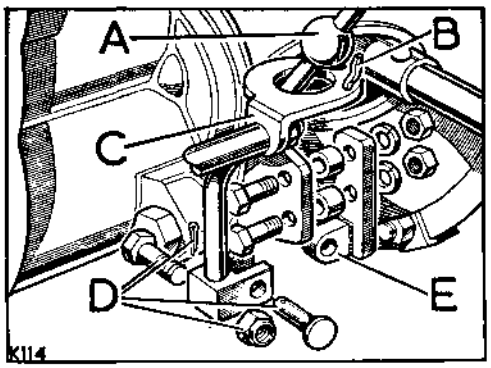


**Fig. C1-47. Transfer gear lever**
A—Transfer gear lever
B—Spring, lever ball to gearbox link
C—Link, for lever
D—Alternative fixings, lever to bell housing
E—Bracket, lever to bell housing

8. Remove the hand brake lever and relay mechanism.
9. LHStg models only. Remove the hand brake cross-shaft.

**Note:** On certain models, the engine exhaust pipe is located above the gearbox left hand rear mounting, and where applicable, the exhaust pipe must be moved clear. Also check the location of the engine earth strap, on certain models it is fitted between the gearbox and chassis and must therefore be disconnected.

*Operations marked with an asterisk (*) can be carried out with the gearbox installed in the vehicle*

## Operation C1-7—*continued*

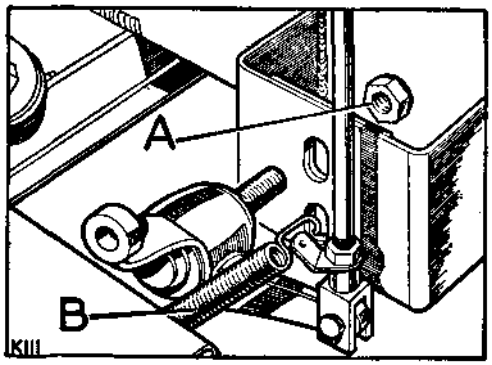


**Fig. C1-48. Hand brake lever and relay lever fixings**

A—Fixings, relay mechanism to chassis
B—Return spring, hand brake

10. Remove the fixings from the two rear mountings for the gearbox.

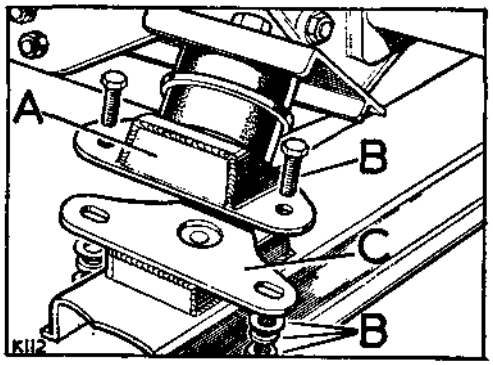


**Fig. C1-49. Gearbox rear mountings**

A—Rear mounting
B—Fixings, rear mountings to chassis
C—Chassis

11. Jack-up the rear of the engine sufficient to insert a 1 in. (25 mm) thick block of wood between the flywheel housing and the chassis to support the gearbox.
12. Remove the bottom cover plate and gasket from the transfer box.
13. Remove the mainshaft rear bearing housing, or if fitted, the power take off drive unit.

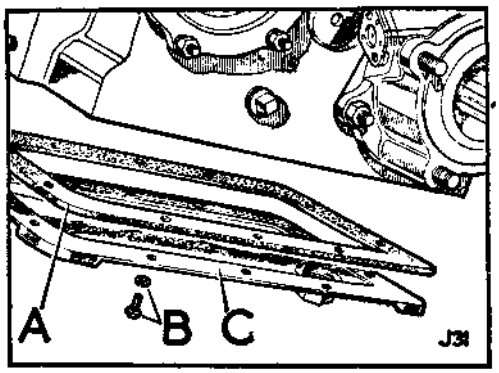


**Fig. C1-50. Transfer box bottom cover plate**

A—Gasket for cover plate
B—Fixings (10 off) bottom cover plate to transfer box
C—Bottom cover plate

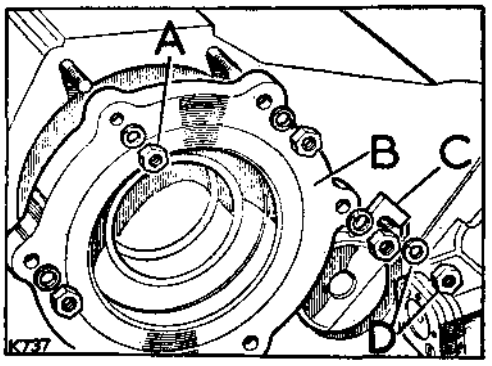


**Fig. C1-51. Mainshaft rear bearing housing**

A—Fixings for housing
B—Housing
C—Retaining plate, intermediate shaft
D—Fixings, retaining plate

14. Remove the fixings from the retaining plate for the intermediate shaft.
15. Support the intermediate gear by hand while using special tool Part No. 605862, to withdraw the intermediate shaft complete with retaining plate and oil seal 'O' ring. Withdraw the intermediate gear through the bottom of the casing, taking care not to let the roller bearings fall from the gear.

## Operation C1-7—*continued*

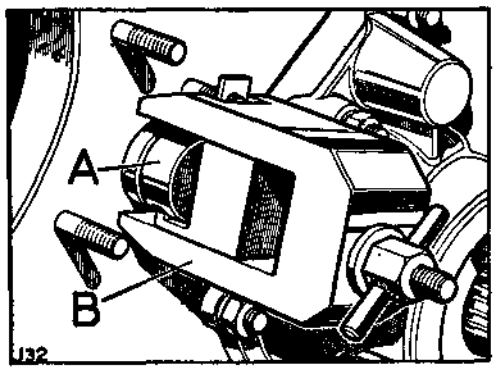


**Fig. C1-52. Removing intermediate gear**

A—Intermediate shaft
B—Special tool Part No. 605862

16. Remove the thrust washers and if fitted, shims, located between each end of the intermediate gear and casing.

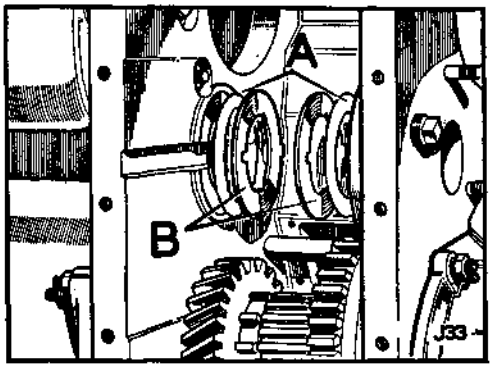


**Fig. C1-53. Thrust washers and shims, intermediate gear**

A—Shims B—Thrust washers

17. Release the fixings and withdraw the transfer box and joint washer from the main gearbox, retained by dowel locations.

### To refit

1. Smear both sides of the joint washer with general purpose grease and place it in position on the main gearbox.

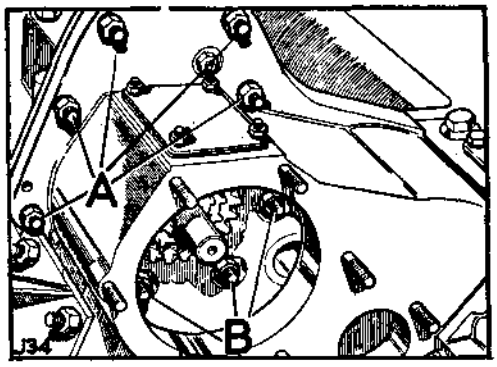


**Fig. C1-54. Fixings, transfer box to main gearbox**

A—External fixings (5 off)
B—Internal fixings (3 off)

2. Fit the transfer box to the main gearbox, engaging the dowel locations.
3. Fit any shims for the intermediate gear, between the thrust washers and the casing, ensuring that the thrust washer bronze faces are towards the intermediate gear. Use a little general purpose grease to retain in position, see Fig. C1-53.

**Note:** If the intermediate gear, bearings or thrust washers have been renewed, the gear end-float must be checked and adjusted, as described under 'Transfer box overhaul'.

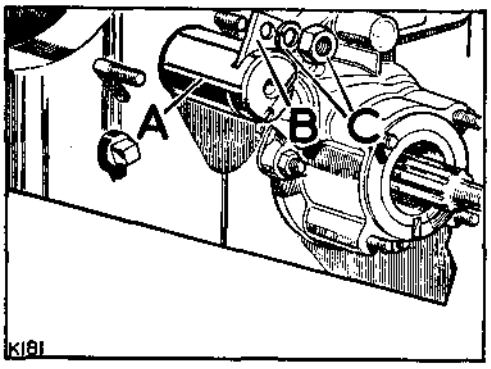


**Fig. C1-55. Fitting intermediate shaft**

A—Intermediate shaft
B—Retaining plate
C—Fixings for retaining plate

## Operation C1-7—*continued*

4. Locate the intermediate gear, complete with roller bearings, in position in mesh with the high and low gear wheels.
5. Fit the intermediate shaft, together with its oil seal 'O' ring and retaining plate, through the casing, shims, thrust washers and intermediate gear, tapping it lightly home when the spigotted end of the shaft engages its location in the front of the casing. The shaft **must** be a light tap fit.
6. Secure the retaining plate in position.
7. Fit the mainshaft rear bearing housing, see Fig. C1-51.
8. Fit the bottom cover plate and gasket, using jointing compound on both sides of the gasket, see Fig. C1-50.
9. Remove the support block from between the flywheel housing and the chassis, and secure the gearbox rear mountings, see Fig. C1-49.
10. If removed, refit the exhaust pipe.
11. LHStg models only. Fit the hand brake cross-shaft.
12. Fit the hand brake lever and relay mechanism, see Fig. C1-48.
13. Fit the transfer gear lever, and ensure that the link securing nut is tight.
14. Connect the speedometer cable to the gearbox, see Fig. C1-46.
15. Connect the front propeller shaft to the gearbox, see Fig. C1-45.
16. Fit the transmission brake. Operation C1-4.
17. Fit the rear propeller shaft.
18. Check and replenish the gearbox lubricating oil. Operation C1-2.
19. If the transfer box is of the all helical type, see Operation C1-8A, check and, if necessary, adjust the transfer travel stop, see Operation C1-9.
20. Fit the seat base. Operation C1-1.
21. Fit the front floor. Operation A1-4.

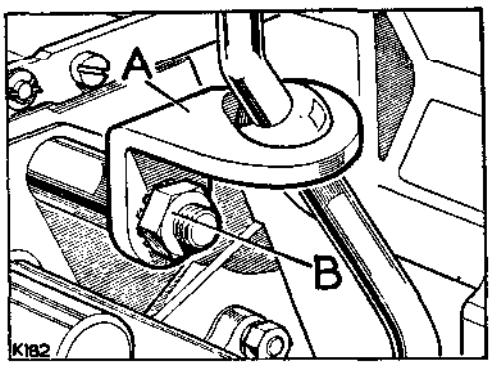


**Fig. C1-56. Link for transfer selector shaft**

A—Link B—Fixings

## *Transfer box, helical and spur gear type, overhaul—Operation C1-8

*(For removal and refitting instructions, Operation C1-7 refers)*

Workshop hand tools:

Spanner sizes: $\frac{3}{8}$ in. BSF open end

Mallet, Circlip pliers, Feeler gauges, Spring balance

Special tools:

Tool for protecting output shaft, Part No. 243241

### General

There are two types of transfer box in use, one utilises a helical and spur gear arrangement, while the other is of all helical design. The only visible external difference is a selector shaft adjuster, fitted to the front output shaft housing on the all helical box only. For overhaul instructions for the all helical type transfer box, Operation C1-8A refers.

### To dismantle

1. Remove the front output shaft housing, Operation C1-9, and the speedometer drive housing, Operation C1-5. Refer to separate instructions for overhaul details of these two items.
2. Remove the circlip retaining the front bearing outer race.

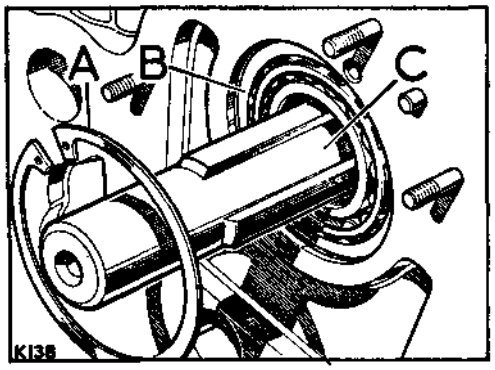


**Fig. C1-57. Circlip for front bearing**

A—Circlip
B—Front bearing
C—Output shaft

3. Using a mallet, drive the output shaft rearwards to remove the rear bearing outer race. Ensure that the output shaft splines do not contact the casing and cause damage.
4. Fit protection cap Part No. 243241, over the threaded end of the output shaft, and drive the shaft forward as far as possible, then slide the shaft to the rear and insert a suitable packing piece between the rollers of the front bearing and the outer race.

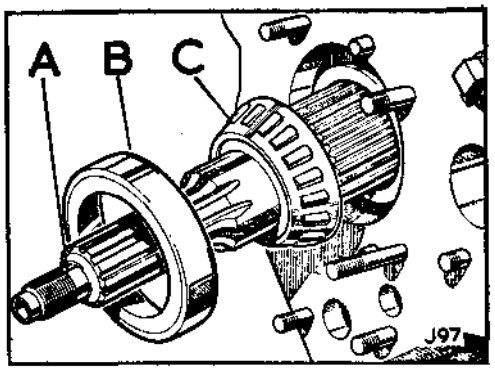


**Fig. C1-58. Rear bearing for output shaft**

A—Output shaft
B—Rear bearing outer race
C—Rear bearing

**Note:** A packing piece can be made from a scrap bearing outer race, with the outer diameter reduced to give clearance in the transfer box and suitably slotted to fit over the shaft.

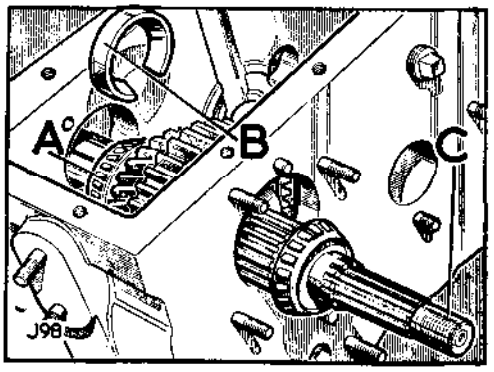


**Fig. C1-59. Packing piece for bearing outer race**

A—Front bearing
B—Packing piece
C—Protection cap

*Operations marked with an asterisk (*) can be carried out with the gearbox installed in the vehicle*

## Operation C1-8—*continued*

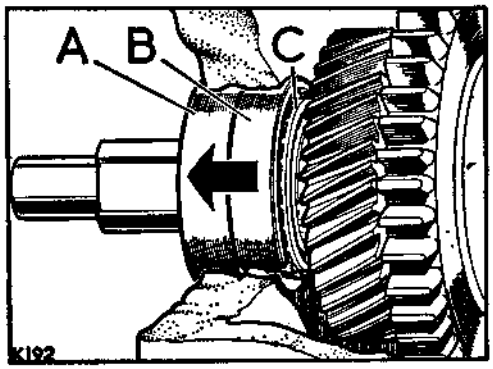


**Fig. C1-60. Removing bearing outer race**

A—Outer race
B—Packing piece
C—Front bearing

5. With the packing piece in position, drive the shaft forward to remove the front bearing outer race.

6. Place pads of rag in position to protect the transfer box bearing bores during the following operations.

7. Using a suitable mild steel bar with a chisel end, drive the front bearing from the output shaft.

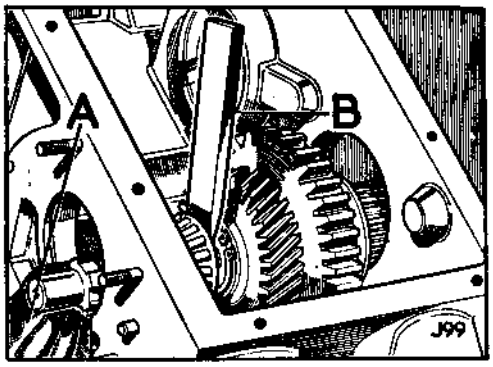


**Fig. C1-61. Removing front bearing**

A—Soft rag to protect casing
B—Mild steel, chisel edged drift

8. Remove the circlip and thrust washer from the output shaft, withdraw the shaft through the gears and remove the gears through the bottom of the casing.

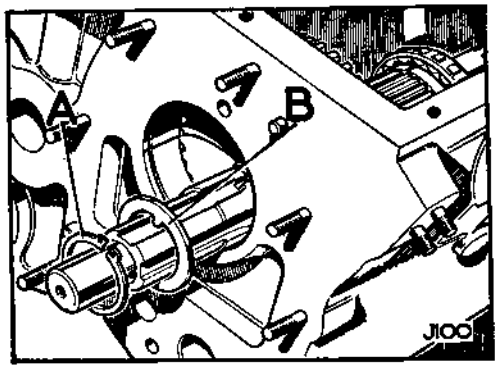


**Fig. C1-62. Fixings, output shaft gears**

A—Circlip, retaining thrust washer
B—Thrust washer for high speed gear

9. Extract or press the rear bearing from the output shaft.

**Note:** The low speed gear is strong enough to be used as a press block for the removal of the rear bearing.

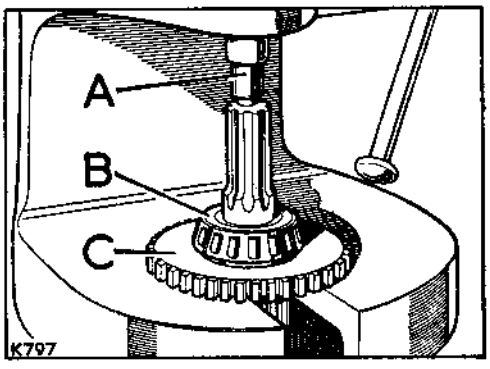


**Fig. C1-63. Pressing off rear bearing**

A—Protection cap
B—Rear bearing
C—Low speed gear

## Operation C1-8—*continued*

10. Remove the circlip, retaining plate and roller bearing from the mainshaft rear bearing housing.

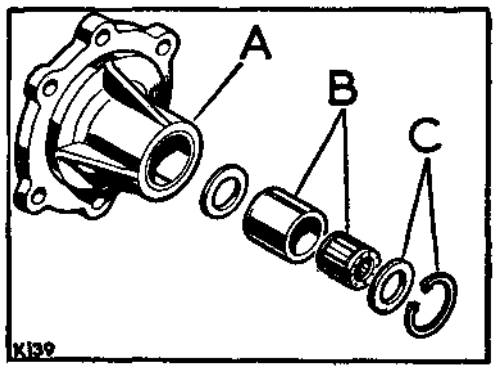


**Fig. C1-64. Rear bearing housing for gearbox mainshaft**

A—Bearing housing
B—Roller bearing
C—Fixings, bearing to housing

11. Remove the rear drive output flange from the transmission brake drum. Prise off the mud shield and remove the flange fixings.

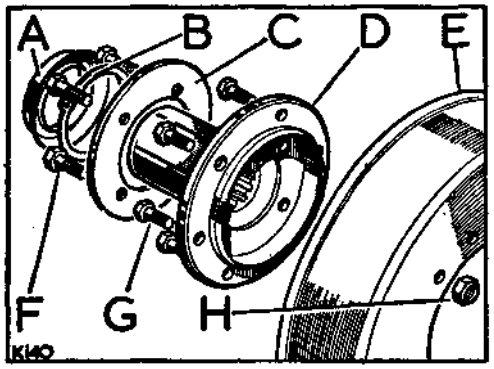


**Fig. C1-65. Rear drive output flange**

A—Mud shield
B—Circlip, retainer propeller shaft bolts
C—Retaining plate, drum bolts
D—Output flange
E—Drum, transmission brake
F—Fitting bolts, propeller shaft
G—Fitting bolt for brake drum
H—Nuts for brake drum bolts

### Inspection

Renew any components which show obvious wear or damage. Check the condition of the shaft splines for the low gear wheel, it is important that the spline corners are not worn.

Note that the low gear wheel is a loose fit on the shaft, this allows the gear to tilt in operation, causing the spline edges at the annular groove to bite on the splines of the low speed gear, locking it in position.

Early transfer boxes are fitted with a bush for the selector shaft guide, the bush is pressed in and reamed to 1.148 in. (29,17 mm).

Examine the sleeve of the output flange for damage which could cause failure of the oil seal.

### Pre-assembly check

1. Fit the high gear wheel on to the output shaft, followed by the thrust washer and circlip.
2. Place a suitable piece of tube over the shaft and push the circlip towards the gear to produce minimum gear end float. Maintaining this condition, check the end float between the gear and the shaft, this must be .006 in. to .008 in. (0,15 mm to 0,20 mm), under these conditions.

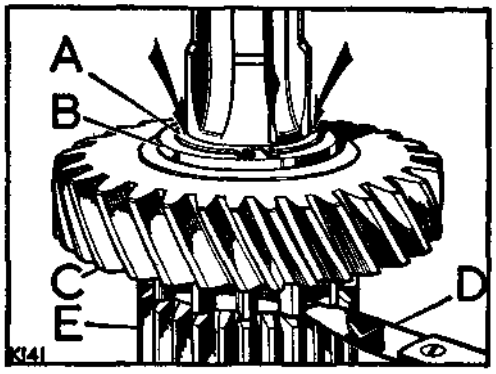


**Fig. C1-66. End-float check, high gear wheel**

A—Circlip
B—Thrust washer
C—High gear wheel
D—Feeler gauges
E—Output shaft

3. Adjustment of the high gear wheel end float is made by reducing the thickness of the thrust washer, or fitting a new thrust washer, as required. If fitting a new thrust washer fails to reduce the end float to the required limits, replace the shaft and/or gear.

### To assemble

1. Assemble the high and low gear wheels and the output shaft into the transfer box.

## Operation C1-8—*continued*

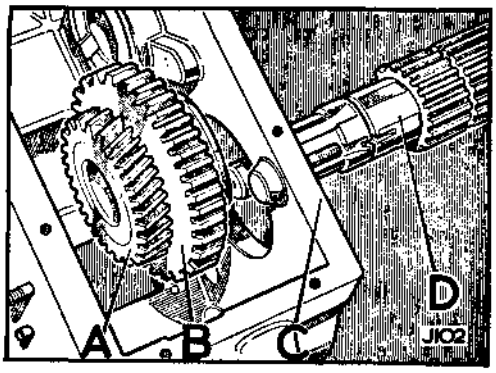


**Fig. C1-67. Fitting output shaft and gears**

A—High gear wheel
B—Low gear wheel
C—Rear face of transfer box
D—Output shaft

2. Fit the thrust washer, determined during the pre-assembly check, to the output shaft and secure, using a new circlip.

3. Use pads of rag to protect the transfer box bearing bores, and drive the two roller bearings on to the output shaft. Fit the front bearing outer race and secure with a circlip.

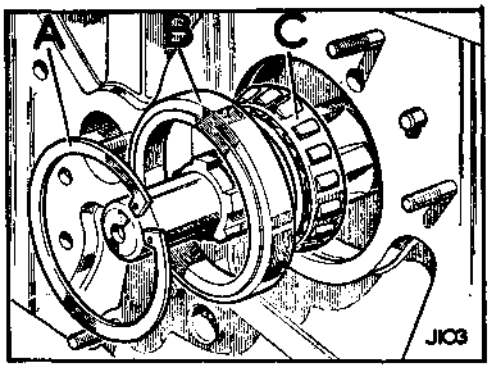


**Fig. C1-68. Front bearing for output shaft**

A—Circlip
B—Bearing outer race
C—Roller bearing

4. Fit the rear bearing outer race.

5. Using the protection cap, Part No. 243241, over the threaded end of the output shaft, drive the shaft forward until the front bearing is hard against the circlip. Then lightly tap the rear bearing outer race further in to remove all end float from the output shaft without introducing pre-load.

6. Set the output shaft bearing pre-load as follows:—

   (a) Fit the speedometer housing, without any shims, and loosely retain with nuts and spring washers.

   (b) Measure the rolling resistance of the output shaft, using a nylon cord attached to a spring balance. Coil the cord around the low gear wheel selector groove and note the measurement recorded on the spring balance required to rotate the output shaft after having overcome inertia. Ensure that the cord does not slip, giving a false reading.

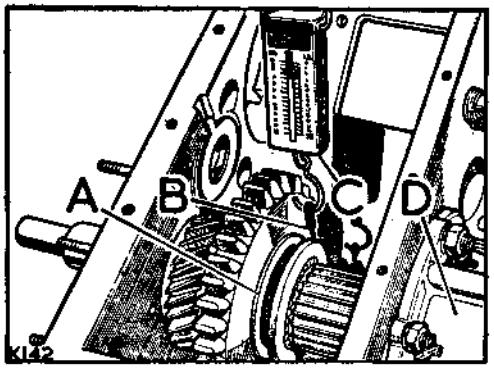


**Fig. C1-69. Checking output shaft bearing pre-load**

A—Low gear wheel selector groove
B—Nylon cord
C—Spring balance
D—Speedometer housing

   (c) Bearing pre-load is correct when a figure of 2 to 4 lbs (0,9 to 1,8 kg) is recorded on the spring balance. Adjustment is made by tightening the speedometer housing securing nuts, progressively and evenly.

## Operation C1-8—*continued*

(d) When the bearing pre-load is correct, ensure that the clearance gap between the speedometer housing and the transfer box is evenly disposed, using feeler gauges. The measured clearance obtained, is equal to the thickness of shims required for subsequent assembly between the speedometer housing and transfer box to maintain correct bearing pre-load.

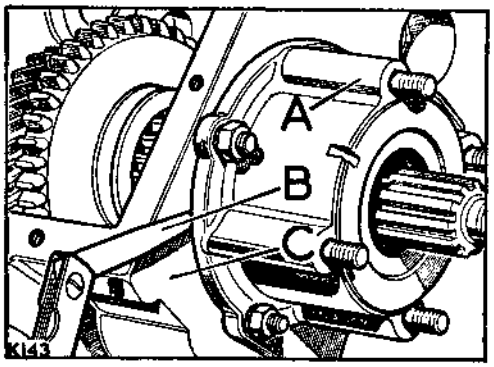


**Fig. C1-70. Determining shims for speedometer housing**

A—Speedometer housing
B—Feeler gauge
C—Transfer box

(e) Withdraw the spring balance and nylon cord from the low gear wheel, and remove the speedometer housing from the transfer box.

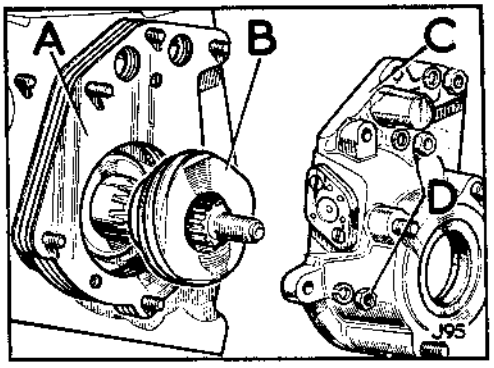


**Fig. C1-71. Speedometer drive assembly**

A—Shims
B—Drive worm
C—Speedometer drive housing
D—Fixings, speedometer housing

7. Using the determined thickness of shims, fit the speedometer drive worm and housing.
8. Determine the Intermediate gear end float as follows:—
   (a) Place the two thrust washers for the intermediate gear in position in the transfer box and retain with a film of grease. The washers must be fitted with the bronze faces inward and located in the casing by their tabs.

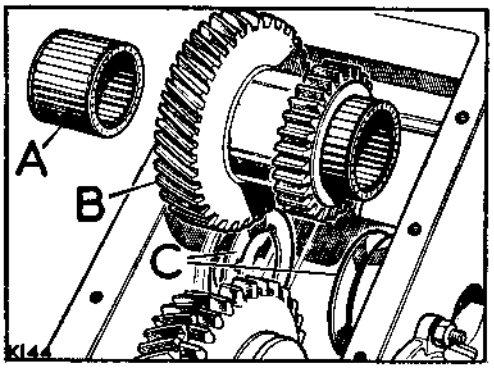


**Fig. C1-72. Intermediate gear assembly**

A—Roller bearings
B—Intermediate gear
C—Thrust washers

(b) Locate the intermediate gear, complete with roller bearings, in position in mesh with the high and low gear wheels.

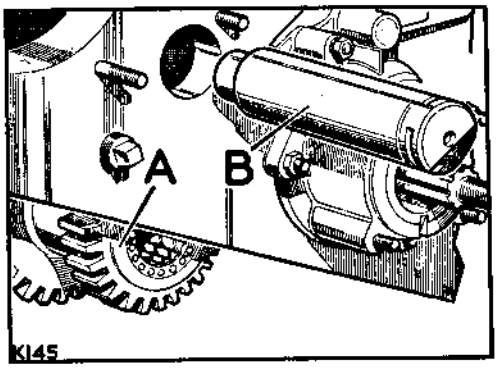


**Fig. C1-73. Intermediate shaft assembly**

A—Intermediate gear B—Intermediate shaft

## Operation C1-8—*continued*

(c) Fit the intermediate shaft through the casing, thrust washers and intermediate gear, tapping it lightly home when the spigotted end of the shaft engages its location in the front of the casing. The shaft must be a light tap fit.

(d) Using feeler gauges, check the end float of the intermediate gear, this must be .004 in. to .008 in. (0,10 mm to 0,20 mm). Adjustment is made by grinding the steel face of the thrust washers to increase end float, or by fitting shims, available in .010 in (0,25 mm) thickness, between the thrust washers and the casing to reduce end float.

(e) When the intermediate gear end float is correct, remove the intermediate shaft and gear, and place aside for subsequent assembly after the transfer box has been fitted to the main gearbox.

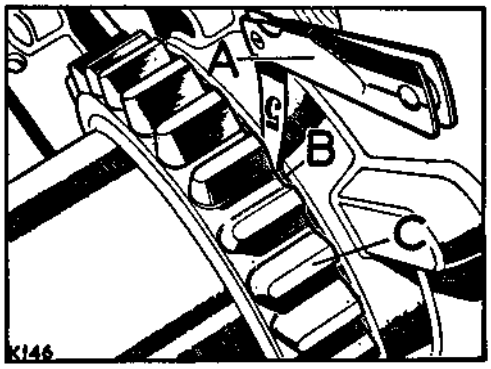


**Fig. C1-74. Checking intermediate gear end-float**

A—Feeler gauge
B—Thrust washer
C—Intermediate gear

9. Re-assemble the rear bearing housing and the output drive flange by reversing the removal procedure.

## *Transfer box (all helical gear type), overhaul—Operation C1-8A

*(For removal and refitting instructions, Operation C1-7 refers)*

Workshop hand tools:
Spanner sizes: $\frac{3}{8}$ in. BSF open end
Mallet, Circlip pliers, Feeler gauges, Spring balance

Special tools:
Tool for protecting output shaft, Part No. 243241

### General

There are two types of transfer box in use, one utilises a helical and spur gear arrangement, while the other is of all helical design. The only visible external difference is a selector shaft adjuster, fitted to the front output shaft housing on the all helical box only. For overhaul instructions of the helical and spur gear type transfer box, Operation C1-8 refers.

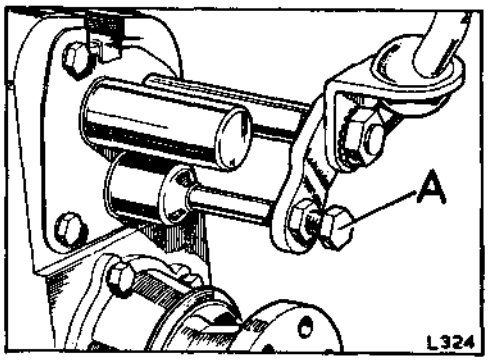


**Fig. C1-75. Identification of all helical type transfer box**

A—Adjuster for selector shaft stop

### To dismantle

1. Remove the front output shaft housing, Operation C1-9, and the speedometer drive housing, Operation C1-5. Refer to separate instructions for overhaul details of these two items.

2. Remove the circlip retaining the front bearing outer race.

3. Place two $\frac{3}{8}$ in. (16 mm) diameter distance pieces between the rear face of the low gear wheel and the transfer box.

4. Retaining the distance pieces in position, use a soft mallet to drive the shaft rearwards until the low gear wheel just abuts the distance pieces.

5. Insert a mild steel chisel between the bush for the high gear wheel and the front bearing and prize the bearing outward approximately $\frac{1}{4}$ in. (6 mm).

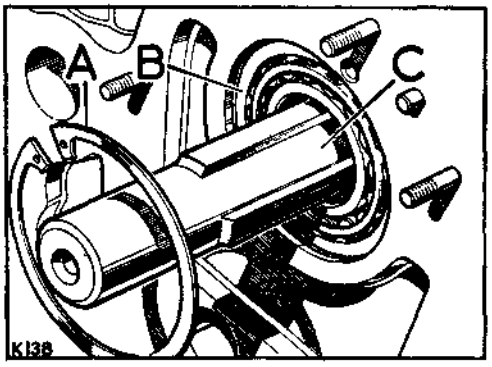


**Fig. C1-76. Circlip for front bearing**

A—Circlip
B—Front bearing
C—Output shaft

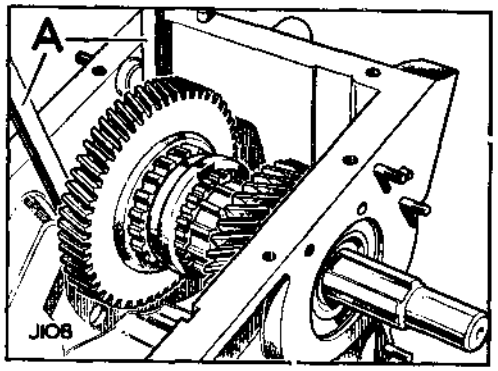


**Fig. C1-77. Location of distance pieces**

A—Distance pieces

6. Part the change speed inner member and high gear wheel by hand and rotate the output shaft to locate the position of the shaft peg.

*Operations marked with an asterisk (*) can be carried out with the gearbox installed in the vehicle*

## Operation C1-8A—*continued*

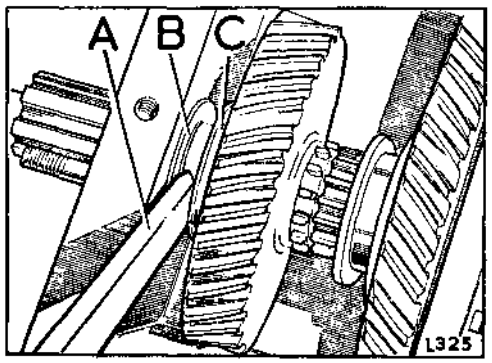


**Fig. C1-78. Moving front bearing**

A—Mild steel chisel
B—Front bearing
C—Bush for high gear wheel

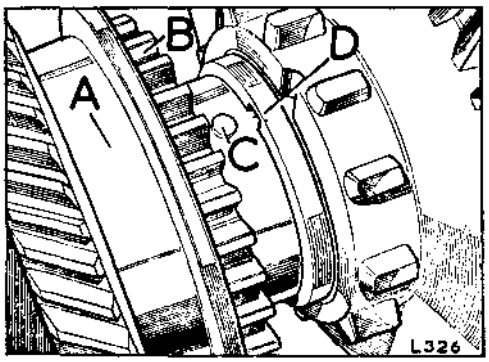


**Fig. C1-79. Locating the output shaft peg**

A—Outer member for transfer change speed
B—Inner member for transfer change speed
C—Peg for output shaft
D—Thrust washer for high gear wheel

**Note:** The space shown between the change speed outer member and the high gear wheel has been exaggerated for clarity.

7. Using a suitable piece of wire, locate the slot in the high gear wheel thrust washer over the peg in the output shaft.

**Note:** If difficulty is experienced in carrying out items 4 to 7, it is permissible to ignore these items and proceed directly with item 8, but this will almost certainly sheer the locating pegs fitted in the output shaft, the sheered pegs must then be removed and new replacements fitted before assembly.

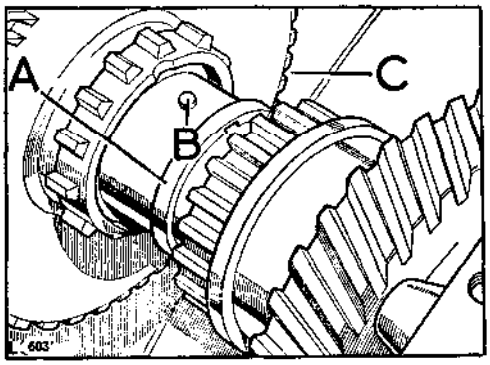


**Fig. C1-80. Positioning thrust washer**

A—Thrust washer for high gear wheel
B—Peg for output shaft
C—High gear wheel

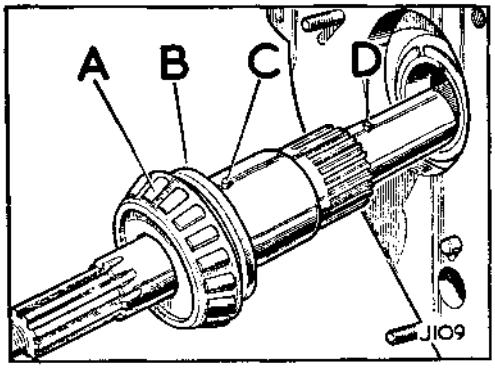


**Fig. C1-81. Removing output shaft**

A—Rear roller bearing
B—Thrust washer for low gear
C—Peg, outer, for output shaft
D—Peg, inner, for output shaft

## Operation C1-8A—*continued*

8. Retaining the distance pieces in position, use a soft-face mallet to drive the shaft rearwards until it can be withdrawn by hand complete with roller bearing, thrust washer and two locating pegs.

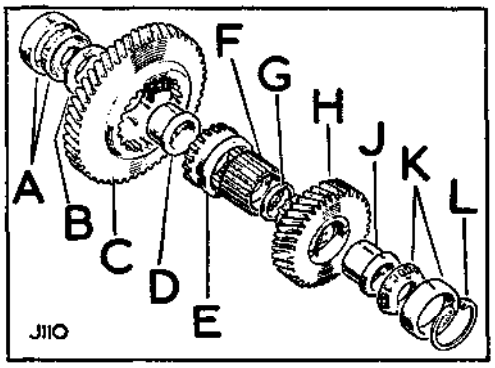


**Fig. C1-82. High and low speed gear assembly**

A—Bearing for output shaft, rear
B—Thrust washer for low gear wheel
C—Low gear wheel
D—Bush for low gear wheel
E—Outer member for transfer change speed
F—Inner member for transfer change speed
G—Thrust washer for high gear wheel
H—High gear wheel
J—Bush for high gear wheel
K—Bearing for output shaft, front
L—Circlip fixing bearing

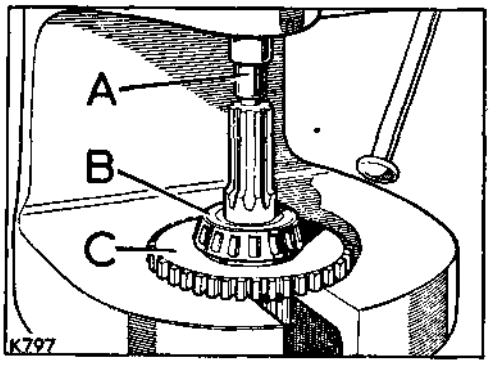


**Fig. C1-83. Pressing off rear bearing**

A—Protection cap
B—Rear bearing
C—Low gear wheel

9. Withdraw the high and low speed gear assembly together with the front bearing from the transfer box.
10. Press the rear bearing and thrust washer from the output shaft.

    **Note:** The low speed gear is strong enough to be used as a press block for removal of the rear bearing.
11. Press the front bearing outer race from the transfer box.
12. Remove the circlip, retaining plate and roller bearing from the mainshaft rear bearing housing.

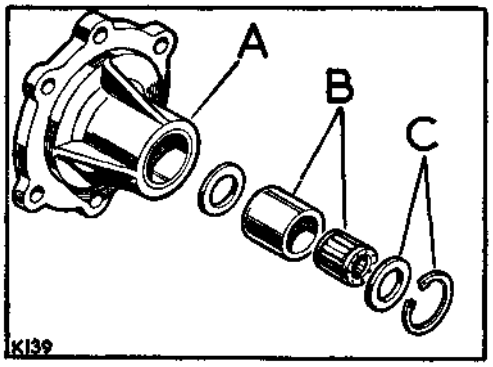


**Fig. C1-84. Rear bearing housing for gearbox mainshaft**

A—Bearing housing
B—Roller bearing
C—Fixings, bearing to housing

### Inspection

Renew any components which show obvious wear or damage.

The steel thrust washer for the high gear wheel and the two locating pegs in the output shaft must be in good condition. New locating pegs are $\frac{5}{32}$ in. (3,96 mm) diameter by .656 in. (16,66 mm) long.

If necessary renew the oilite bush in the transfer casing, which carries the transfer selector shaft. This bush is an interference fit in the casing, and must be reamed to 1.148 in. (29,17 mm) after fitting.

## Operation C1-8A—*continued*

### Pre-assembly check

1. Fit the steel thrust washer and the rear bearing on to the rear of the output shaft.
2. Fit the low gear wheel complete with bush on to the output shaft to abut with the steel thrust washer.

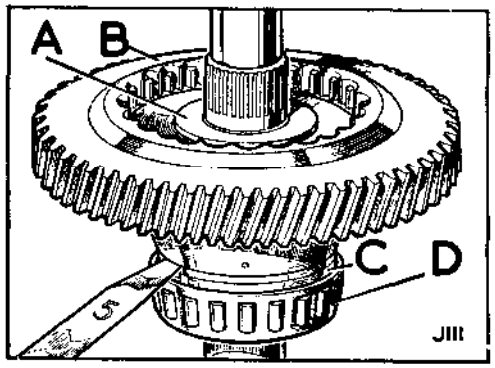


**Fig. C1-85. Checking low gear end-float**

A—Bush for low gear wheel
B—Low gear wheel
C—Steel thrust washer
D—Rear bearing for output shaft

3. Hold the bush in firm contact with the steel thrust washer and check the end-float of the low gear wheel, which must be .002 in. to .009 in. (0,05 mm to 0,22 mm).
4. Remove the low gear wheel from the shaft, and replace the centre bush. Fit the change speed inner member, the thrust washer for the high gear wheel and the high gear wheel complete with bush.
5. Hold the bush for the high gear wheel in firm contact with the thrust washer and check the end-float of the high gear wheel, which must be .005 in. to .022 in. (0,12 mm to 0,55 mm).
6. Excessive end-float on either gear wheel may be rectified by carefully rubbing down the end of the respective bush, using fine emery cloth and a face plate. Insufficient end-float can be rectified by fitting a new bush, followed by a further end-float check and rubbing down as necessary.

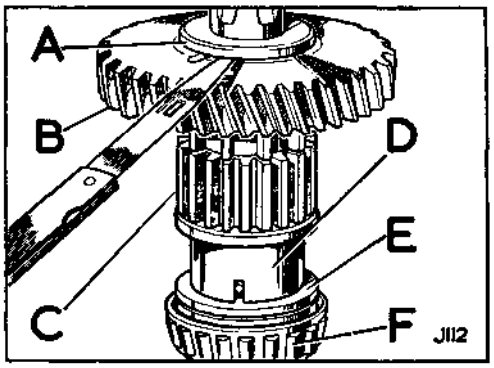


**Fig. C1-86. Checking high gear end-float**

A—Bush for high gear wheel
B—High gear wheel
C—Change speed inner member
D—Bush for low gear wheel
E—Steel thrust washer
F—Rear bearing for output shaft

7. Remove all the components from the shaft except the steel thrust washer and rear bearing inner member, ready to proceed with final assembly of the transfer box.

### To assemble

1. The steel thrust washer, and the inner member of the rear roller bearing, should be in position on the output shaft. Ensure that the two steel location pegs are fitted to the shaft.
2. Fit the bush to the low speed gear wheel, in the correct direction.
3. Place the change speed inner and outer members against the thrust side of the bush. The recessed side of the inner member should be towards the bush, and the teeth on the outer member should be in mesh with the internal teeth of the gear wheel.
4. Place the high gear wheel, minus its centre bush, in position on the assembly with the dog teeth abutting the change speed outer member.
5. Lower the complete assembly into position in the transfer box, with the low speed gear wheel to the rear.

## Operation C1-8A—*continued*

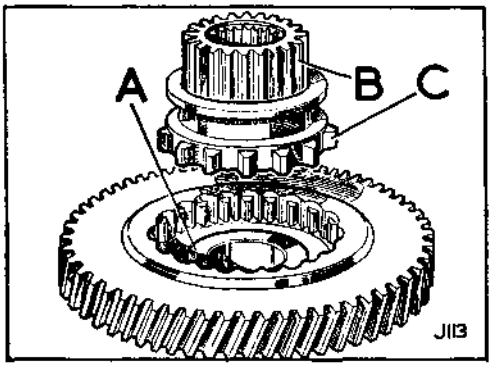


**Fig. C1-87. Assembly of gear prior to fitting in box**

A—Bush for low gear wheel
B—Change speed inner member
C—Change speed outer member

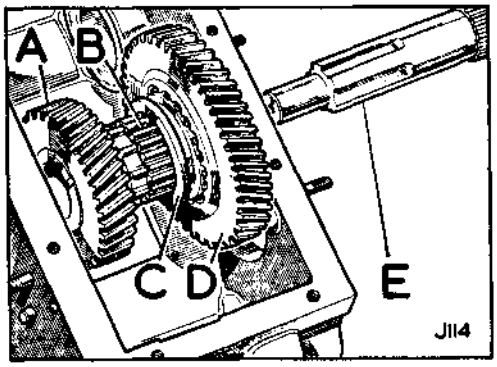


**Fig. C1-88. Fitting output shaft to high and low gear assembly**

A—High gear wheel
B—Change speed inner member
C—Change speed outer member
D—Low gear wheel
E—Output shaft

6. Carefully push the output shaft through the assembly and into position, from the rear, ensuring that the low speed gear wheel bush locates on the peg in the shaft, and that the splines of the change speed inner member are located on the shaft splines.
7. Slide the thrust washer for the high gear wheel over the front of the shaft and through the centre of the high speed gear, taking care to ensure that the washer slides over the peg and is located in the recess on the gear change inner member. Fit the bush through the high speed gear wheel and locate it also on the peg.
8. Turn the casing on its side with the rear face downwards and with the output shaft threaded end, resting on the bench, drift the front taper roller bearing on to the shaft. Take precautions to protect the thread against damage and make sure that the gears do not separate while the roller bearing is being fitted otherwise the bushes may become dislodged from the pegs on the shaft.

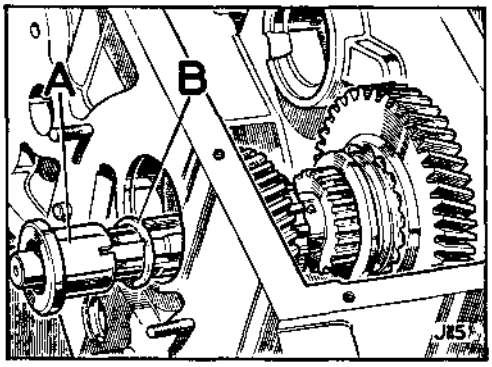


**Fig. C1-89. Fitting thrust washer and bush to high gear wheel**

A—Bush for high gear wheel
B—Thrust washer for high gear wheel

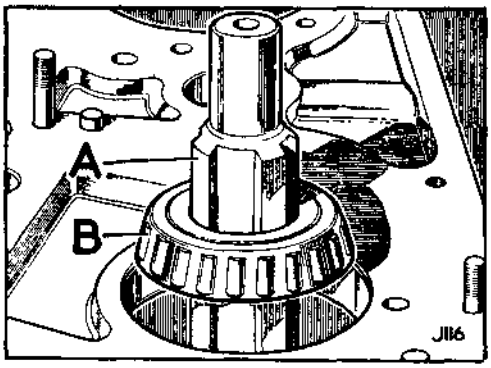


**Fig. C1-90. Fitting front bearing**

A—Output shaft
B—Front roller bearing

## Operation C1-8A—*continued*

9. With the assembly held in the same position, drive the front bearing outer race into the housing and fit the circlip.

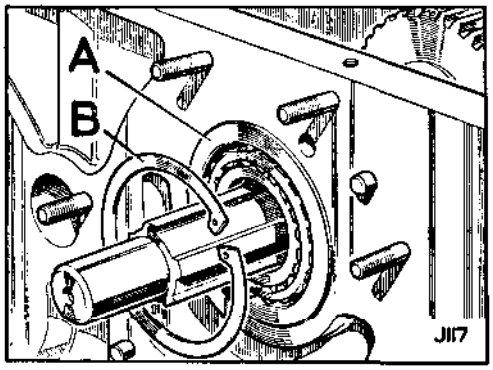


**Fig. C1-91. Fitting front bearing outer race**

A—Outer race for front bearing
B—Circlip for outer race

10. Fit the rear bearing outer race.

11. Using the protection cap, Part No. 243241, over the threaded end of the output shaft, drive the shaft forward until the front bearing is hard against the circlip. Then lightly tap the rear bearing outer race further in to remove all end-float from the output shaft without introducing pre-load.

12. Set the output shaft bearing pre-load as follows:

    (a) Fit the speedometer housing, without any shims, and loosely retain with nuts and spring washers.

    (b) Measure the rolling resistance of the output shaft, using a nylon cord attached to a spring balance. Coil the cord around the low gear wheel selector groove and note the measurement recorded on the spring balance required to rotate the output shaft after having overcome inertia. Ensure that the cord does not slip, giving a false reading.

    (c) Bearing pre-load is correct when a figure of 2 lbs to 4 lbs (0,9 kg to 1,8 kg) is recorded on the spring balance. Adjustment is made by tightening the speedometer housing securing nuts, progressively and evenly.

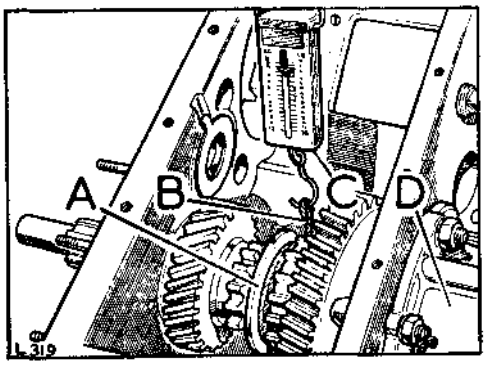


**Fig. C1-92. Checking output shaft bearing pre-load**

A—Low gear wheel selector groove
B—Nylon cord
C—Spring balance
D—Speedometer housing

    (d) When the bearing pre-load is correct, ensure that the clearance gap between the speedometer housing and the transfer box is evenly disposed, using feeler gauges. The measured clearance obtained, is equal to the thickness of shims required for subsequent assembly between the speedometer housing and transfer box to maintain correct bearing pre-load.

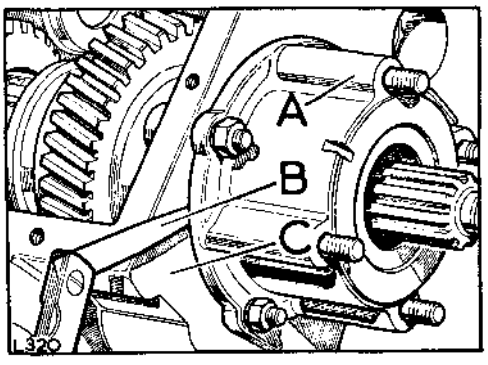


**Fig. C1-93. Determining shims for speedometer housing**

A—Speedometer housing
B—Feeler gauge
C—Transfer box

## Operation C1-8A—*continued*

(e) Withdraw the spring balance and nylon cord from the low gear wheel, and remove the speedometer housing from the transfer box.

13. Using the determined thickness of shims, fit the speedometer drive worm and housing.

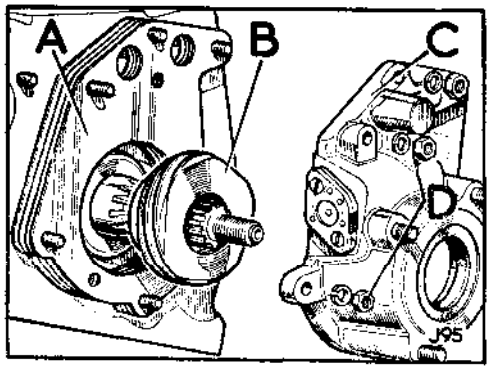


**Fig. C1-94. Speedometer drive assembly**

A—Shims
B—Drive worm
C—Speedometer drive housing
D—Fixings, speedometer housing

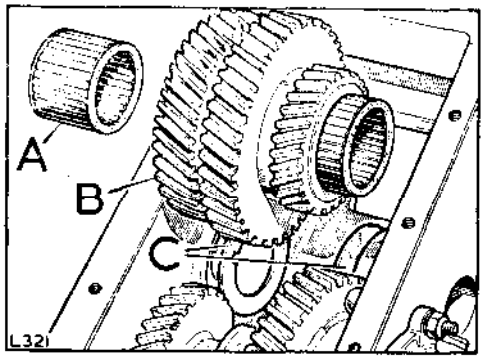


**Fig. C1-95. Intermediate gear assembly**

A—Roller bearings
B—Intermediate gear
C—Thrust washers

14. Determine the intermediate gear end-float as follows:

(a) Place the two thrust washers for the intermediate gear in position in the transfer box and retain with a film of grease. The washers must be fitted with the bronze faces inward and located in the casing by their tabs.

(b) Locate the intermediate gear, complete with roller bearings, in position in mesh with the high and low gear wheels.

(c) Fit the intermediate shaft through the casing, thrust washers and intermediate gear, tapping it lightly home when the spigotted end of the shaft engages its location in the front of the casing. The shaft must be a light tap fit.

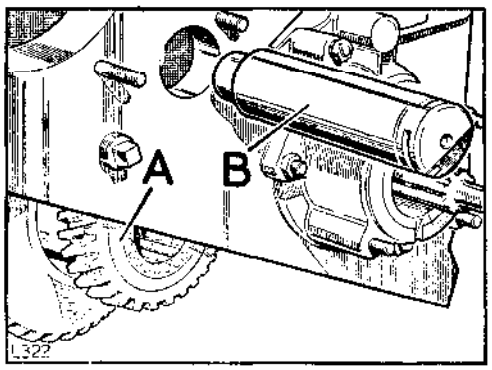


**Fig. C1-96. Intermediate shaft assembly**

A—Intermediate gear
B—Intermediate shaft

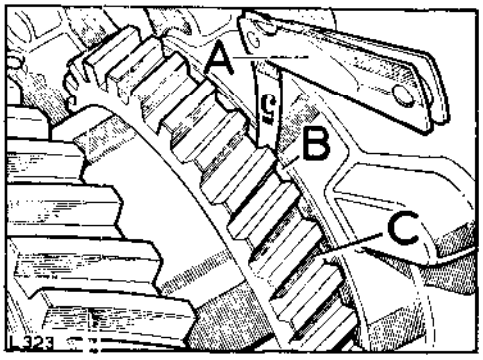


**Fig. C1-97. Checking intermediate gear end-float**

A—Feeler gauge
B—Thrust washer
C—Intermediate gear

## Operation C1-8A—*continued*

(d) Using feeler gauges, check the end-float of the intermediate gear, this must be .004 in. to .008 in. (0,10 mm to 0,20 mm). Adjustment is made by grinding the steel face of the thrust washers to increase end-float, or by fitting shims, available in .010 in. (0,25 mm) thickness, between the thrust washers and the casing to reduce end-float.

(e) When the intermediate gear end-float correct, remove the intermediate shaft and gear, and place aside for subsequent assembly after the transfer box has been fitted to the main gearbox.

15. Reassemble the rear bearing housing and the output drive flange by reversing the removal procedure.

16. Adjust the transfer travel stop after fitting the front output shaft housing to the transfer box, see Operation C1-9.

## *Front output shaft housing, remove and refit—Operation C1-9

*(For overhaul instructions, Operation C1-10 refers)*

Workshop hand tools:
Spanner sizes: $\frac{5}{16}$ in. open end, $\frac{1}{2}$ in. BSF, $\frac{5}{16}$ in. BSF, $\frac{3}{8}$ in. BSF socket

### To remove

1. Remove the front floor. Operation A1-4.
2. Remove the seat base. Operation C1-1.
3. Drain the gearbox lubricating oil. Operation C1-2

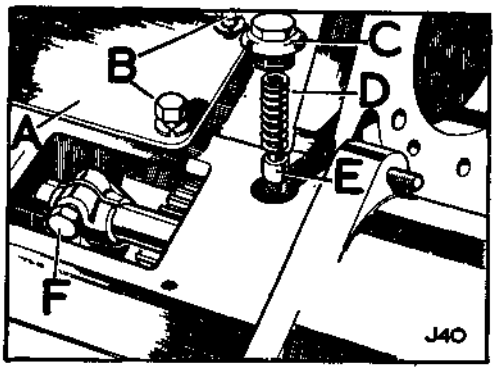


**Fig. C1-98. Transfer gear selector**

A—Top cover, transfer box
B—Fixings, top cover
C—Plug for plunger
D—Spring for plunger
E—Plunger, transfer selector shaft
F—Pinch bolt securing selector fork

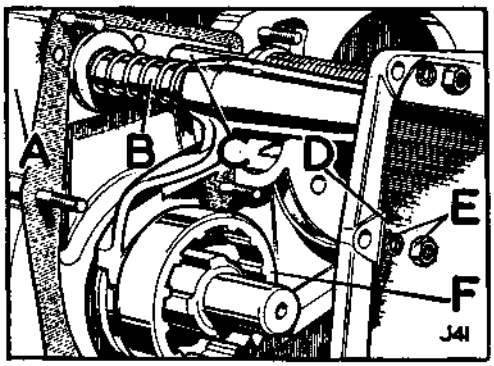


**Fig. C1-99. Fixings for front output shaft housing**

A—Transfer box
B—Selector shaft and fork, four wheel drive
C—Selector shaft and fork, transfer gear
D—Front output shaft housing
E—Fixings (7 off), front output shaft housing to transfer box
F—Locking dog, four wheel drive

4. Remove the transmission brake. Operation C1-4.
5. Remove the transfer box. Operation C1-7.
6. Remove the transfer gear selector shaft plunger.
7. Remove the top cover from the transfer box.
8. Remove the pinch bolt from the transfer selector fork.
9. Remove the front output shaft housing from the transfer box, taking care to catch the four wheel drive locking dog which will be released.
10. Withdraw the loose selector fork from the transfer box.

### To refit

If the selector shafts have been removed, refer to Operation C1-10 for refitting procedure.

1. Place the transfer gear selector fork in position, with the threaded side of the pinch bolt hole towards the centre of the transfer box.
2. Smear both sides of the joint washer with a general purpose grease and place in position on the transfer box.
3. Offer the output shaft housing to the transfer box, carefully locating the transfer gear selector shaft through the selector fork.

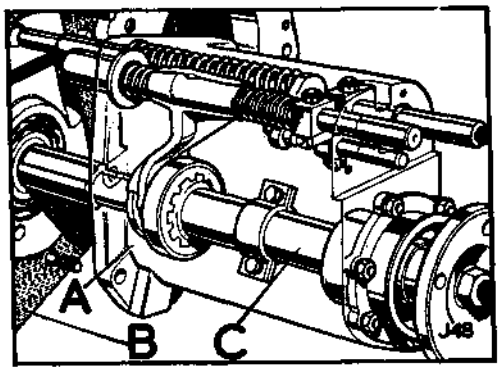


**Fig. C1-100. Offering front output shaft housing to transfer box**

A—Transfer box
B—Joint washer
C—Front output shaft housing assembly

*Operations marked with an asterisk (*) can be carried out with the gearbox installed in the vehicle*

## Operation C1-9—*continued*

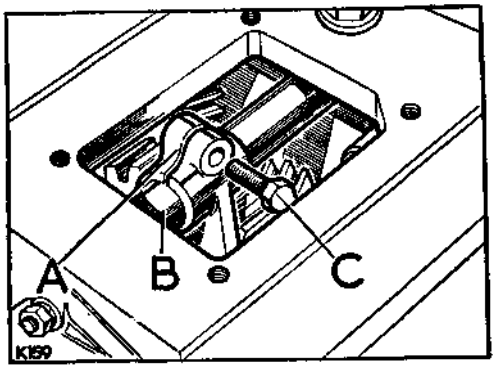


**Fig. C1-101. Transfer gear selector fork assembly**

A—Selector fork
B—Selector shaft
C—Pinch bolt

4. Complete the refitting by reversing the removal procedure. Ensure that the selector fork pinch bolt engages the groove in the selector shaft.

5. If the transfer box is of the all helical type, see Operation C1-8A, adjust the transfer travel stop as follows:

   Engage four wheel drive, low ratio, and check the fit of the four wheel drive locking pin in the pivot shaft. The pin must be an easy slide fit, if necessary, adjust the stop bolt to obtain this condition, then tighten the locknut to secure the stop bolt.

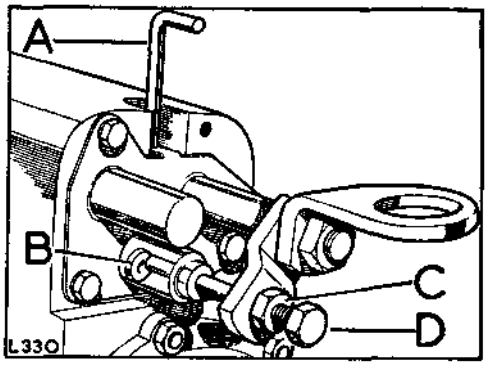


**Fig. C1-102. Adjusting the transfer travel stop**

A—Four wheel drive locking pin
B—Pivot shaft
C—Locknut
D—Adjuster bolt

6. Check and replenish the gearbox lubricating oil. Operation C1-2.

7. Adjust the four wheel drive control lever. Operation A1-4

## *Front output shaft housing, overhaul—Operation C1-10

*(For removal and refitting instructions, Operation C1-9 refers)*

Workshop hand tools:
Spanner sizes: $\frac{5}{16}$ in. BSF, $\frac{3}{8}$ in. BSF open end, $\frac{5}{8}$ in. BSF socket
Screwdriver (medium), Mallet

### To dismantle

### To dismantle housing

1. Remove the link from the transfer gear selector shaft.
2. Remove the four wheel drive control lever.

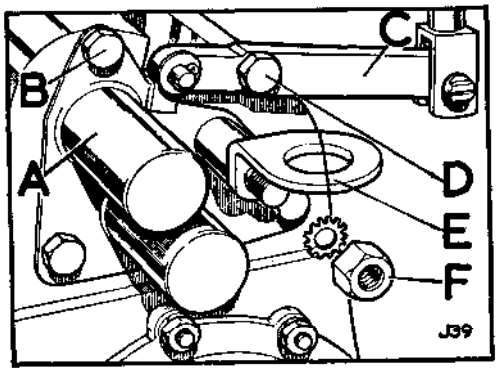


**Fig. C1-103. Gear selector controls**

A—Dust cover, selector shafts
B—Cover fixings
C—Selector lever, four wheel drive
D—Lever fixings
E—Link, transfer gear lever
F—Link fixings

3. Remove the selector shaft dust cover.
4. Withdraw the selector shaft assemblies and the four wheel drive locking dog from the housing.

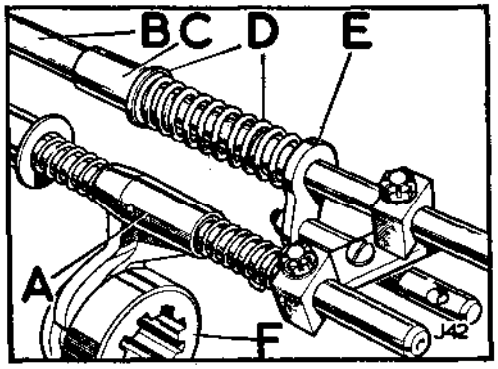


**Fig. C1-104. Selector shaft assembly**

A—Selector shaft, four wheel drive
B—Selector shaft, transfer gear
C—Distance tube
D—Locating bush and spring for selector fork
E—Gearchange pivot shaft assembly
F—Locking dog, four wheel drive

5. Remove the flange from the front output shaft.
6. Remove the oil seal retainer and gasket and press out the oil seal.

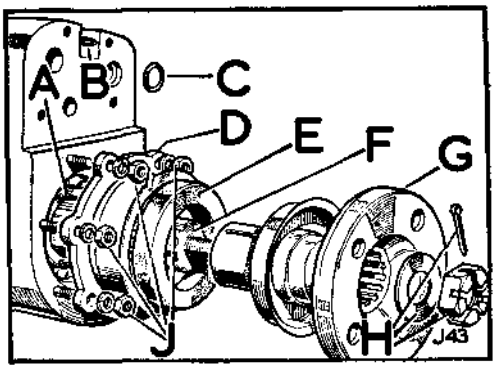


**Fig. C1-105. Oil seal and flange for front output shaft**

A—Bearing for output shaft
B—Sealing ring for four wheel drive locking pin
C—Sealing ring for transfer gear selector shaft
D—Retainer for oil seal
E—Oil seal
F—Output shaft
G—Flange for output shaft
H—Fixings, output flange
J—Fixings, oil seal retainer

7. Remove the front output shaft from the housing then press out the bearing.
8. Remove the sealing rings for the four wheel drive locking pin and the transfer gear shaft.

### To dismantle four wheel drive selector shaft

9. Remove block from the selector shaft and withdraw the fork and springs.

*Operations marked with an asterisk (*) can be carried out with the gearbox installed in the vehicle*

## Operation C1-10—*continued*

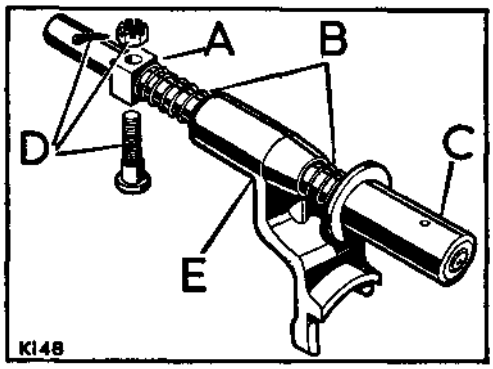


**Fig. C1-106. Four wheel drive selector shaft**

A—Block
B—Springs
C—Selector shaft
D—Fixings for block
E—Selector fork

### To dismantle transfer gear selector shaft

10. Slide the distance tube, bush, spring and pivot shaft assembly from the selector shaft.
11. Remove the block.
12. Remove the connector from the pivot shaft.

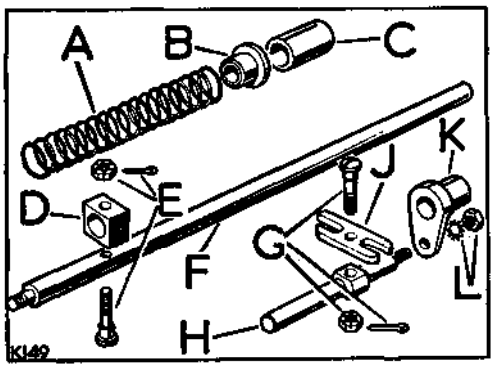


**Fig. C1-107. Transfer gear selector shaft**

A—Spring
B—Bush, spring location
C—Distance tube
D—Block
E—Fixings for block
F—Selector shaft
G—Fixings for coupling
H—Pivot shaft
J—Coupling, selector shafts
K—Connector, pivot shaft to selector shaft
L—Fixings, connector to pivot shaft

13. Remove the coupling from the pivot shaft.

### To dismantle front output shaft

14. Remove the two self-locking nuts and lift the two halves of the oil thrower from the shaft.

### Inspection

Renew any components which show obvious wear or damage. Examine the bush in the four wheel drive control lever and replace if necessary.

Examine the four wheel drive selector fork and bushes, and renew as necessary. New bushes must be pressed flush with the end faces of the fork boss, and reamed in position to .6255 in. +.0005 in. (15,887 mm + 0,012 mm) diameter, and must be a sliding fit on the selector shaft.

Check the four wheel drive selector shaft springs, the free length should be 2.75 in. (69,8 mm).

Check the transfer selector shaft spring, the free length should be 7.156 in. (181,76 mm).

Examine the bush in the rear end of the front output shaft. The bush must be a sliding fit on the front end of the transfer box output shaft and must be firmly retained in its bore. If bush replacement is necessary, press the new bush flush with the end of the shaft and ream in position to .8755 in. ±.0005 in (22,2 mm ±0,013 mm) diameter.

### To assemble front output shaft

1. Fit the oil thrower to the front output shaft.

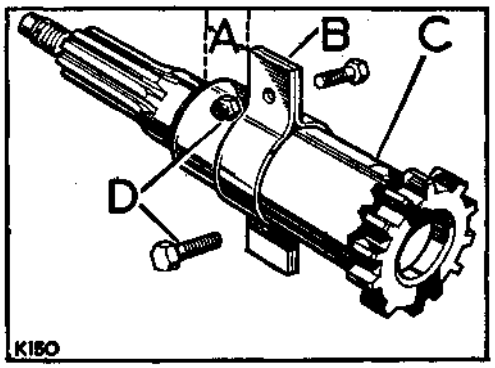


**Fig. C1-108. Oil thrower location**

A—1 inch ± 1/32 in. (25,4 mm ± 0,75 mm)
B—Oil thrower
C—Front output shaft
D—Fixings oil thrower

## Operation C1-10—*continued*

### To assemble transfer gear selector shaft

2. Fit the connector to the pivot shaft noting the relationship of the countersink in the hole at the other end of the shaft. Do not fully tighten the fixings at this stage.
3. Fit the coupling to the pivot shaft locating the extended arm correctly, as illustrated.

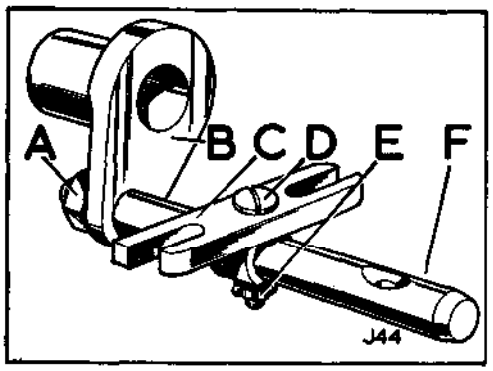


**Fig. C1-109. Pivot shaft assembly**
A—Nut and shakeproof washer
B—Connector
C—Extended arm of coupling
D—Special screw
E—Castle nut and split pin
F—Pivot shaft

4. Fit the block to the transfer gear selector shaft locating the fixings so that the nut and split pin are on the same side of the shaft as the plunger grooves.

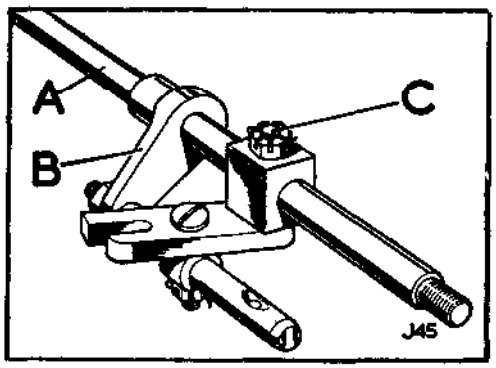


**Fig. C1-110. Assembly of selector and pivot shafts**
A—Transfer selector shaft
B—Connector
C—Special screw, securing block

5. Locate the pivot shaft assembly in position on the transfer gear selector shaft engaging the coupling with the special screw.
6. Fit the spring, locating bush and distance tube on to the selector shaft.

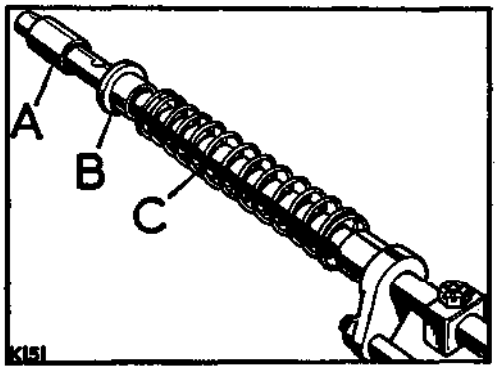


**Fig. C1-111. Transfer gear selector shaft assembly**
A—Distance tube
B—Bush, spring location
C—Spring

### To assemble four wheel drive selector shaft

7. Fit the springs and selector fork to the shaft. Note that the two springs are identical and are interchangeable.

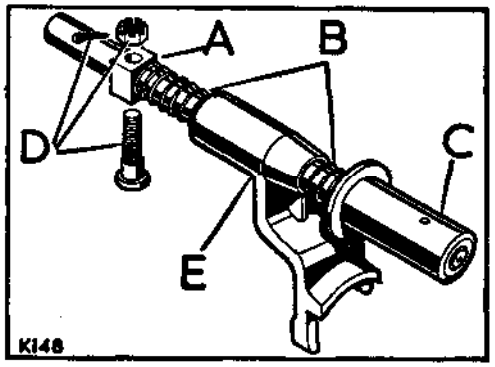


**Fig. C1-112. Four wheel drive selector shaft assembly**
A—Block
B—Springs
C—Selector shaft
D—Fixings for block
E—Selector fork

8. Fit the block to the selector shaft.

## Operation C1-10—*continued*

### To assemble housing

9. Fit the oil seal for the front output shaft, lipped side inward, into the retainer, with a smear of sealant on the seal outside diameter.

10. Press the bearing into the housing.

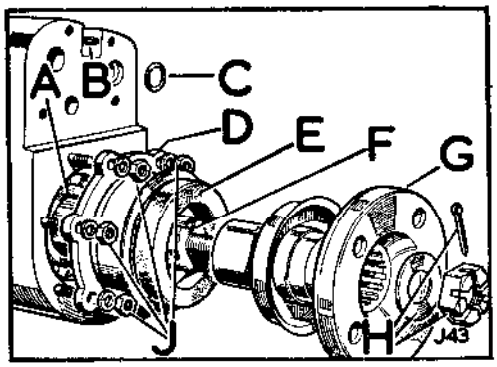


**Fig. C1-113. Oil seal and flange for front output shaft**

A—Bearing for output shaft
B—Sealing ring, four wheel drive locking pin
C—Sealing ring, transfer gear selector shaft
D—Retainer for oil seal
E—Oil seal
F—Output shaft
G—Flange for output shaft
H—Fixings, output flange
J—Fixings, oil seal retainer

11. Smear both sides of the joint washer with general purpose grease, and fit the oil seal retainer and joint washer to the housing.

12. Fit the front output shaft.

13. If the mud shield has been removed, refit it, dished side first, to the output flange. Fit the flange to the output shaft and tighten the securing nut to a torque figure of 85 lb ft (11,75 mkg).

### Pre-alignment of selector shafts

14. Locate the two selector shafts together by engaging the coupling with the special screws.

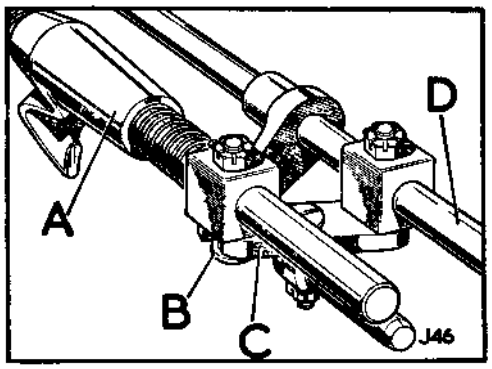


**Fig. C1-114. Assembly of selector shafts**

A—Four wheel drive selector shaft
B—Special screw
C—Coupling
D—Transfer gear selector shaft

15. Locate the selector shaft assembly into the front face of the output shaft housing, and fit the four wheel drive locking pin, engaging it in the countersunk hole in the pivot shaft. This will ensure correct radial alignment of the pivot shaft to the connector.

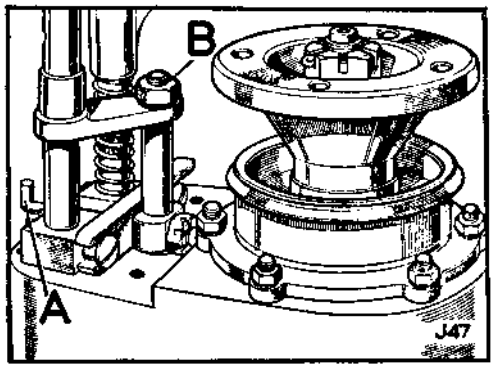


**Fig. C1-115. Pre-alignment of selector shafts**

A—Four wheel drive locking pin
B—Nut fixing connector to pivot shaft

16. Fully tighten the nut to secure the connector to the pivot shaft.

## Operation C1-10—*continued*

17. Remove the locking pin and withdraw the selector shafts as one unit, then without disturbing their alignment, engage them into their correct location in the output shaft housing, while at the same time fitting the four wheel drive locking dog over the output shaft and into the selector fork.

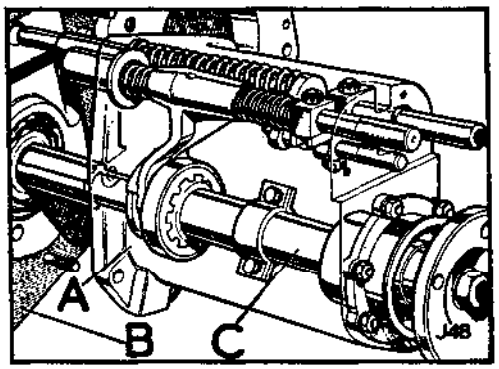


**Fig. C1-116. Front output shaft housing**

A—Transfer box
B—Joint washer
C—Front output shaft housing assembly

**Note:** If convenient, it will be advantageous at this stage to fit the front output shaft housing to the transfer box. Operation C1-9.

18. Fit the sealing rings for the transfer gear selector shaft and the four wheel drive locking pin.

19. Fit the selector shaft dust cover, using Bostik sealant on the joint face.

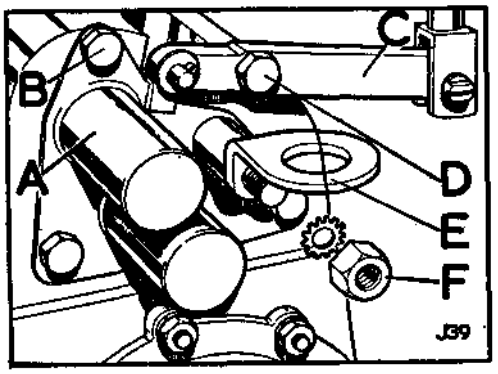


**Fig. C1-117. Gear selector controls**

A—Dust cover, selector shafts
B—Cover fixings
C—Selector lever, four wheel drive
D—Lever fixings
E—Link, transfer gear lever
F—Link fixings

20. Fit the link to the selector shaft, but do not fully tighten the fixing at this stage.

21. Fit the four wheel drive locking pin and control lever.

## *Main gear change lever, remove and refit—Operation C1-11

*(For overhaul instructions, Operation C1-12 refers)*

Workshop hand tools:
Spanner sizes: $\frac{3}{8}$ in. BSF, $\frac{7}{16}$ in. AF open end

### To remove

1. Remove the front floor complete. Operation A1-4.
2. Remove the main gear change lever complete.

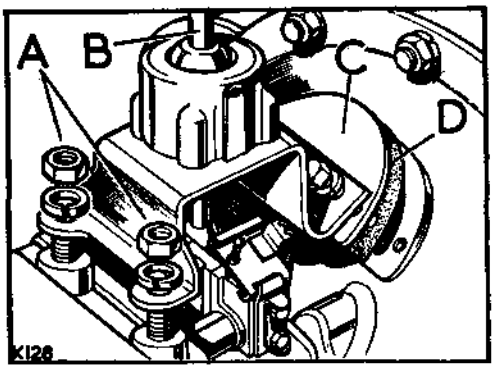


**Fig. C1-118. Main gear change lever mounting**

A—Fixings, main gear change lever
B—Main gear change lever
C—Top cover plate, bell housing
D—Rubber seal, top cover plate

3. To prevent loss, lift off the top cover plate and rubber seal from the bell housing.

### To refit

Reverse the removal procedure, noting that a retaining clip for the speedometer cable locates under the head of the front left hand gear change lever securing bolt.

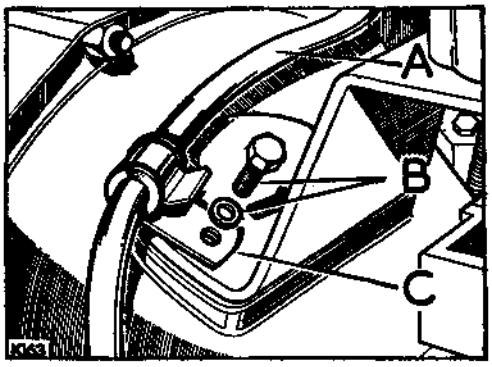


**Fig. C1-119. Clip for speedometer cable**

A—Speedometer cable
B—Fixing, cable clip
C—Clip for cable

Adjust the four wheel drive control lever. Operation A1-4.

## *Main gear change lever, overhaul—Operation C1-12

*(For removal and refitting instructions, Operation C1-11 refers)*

Workshop hand tools:
Spanner sizes: ¼ in. Whitworth socket, ½ in. BSF open end
Circlip pliers, Screwdriver (small), Mallet

### To dismantle

1. Remove the lever housing from the mounting plate.

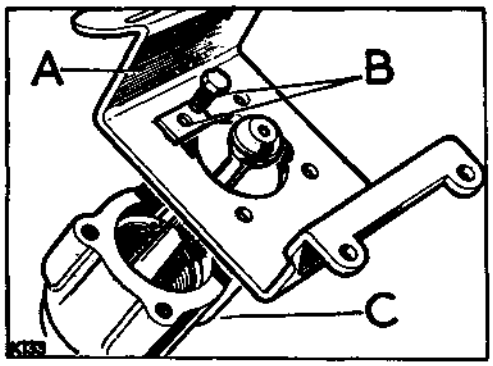


**Fig. C1-120. Mounting for gear change lever**

A—Mounting plate
B—Fixings, lever housing to mounting plate
C—Lever housing

2. Remove the circlip from the lever housing and withdraw the retaining plate, spring, spherical seat and gear change lever.
3. Remove the lever ball locating pin from the housing.

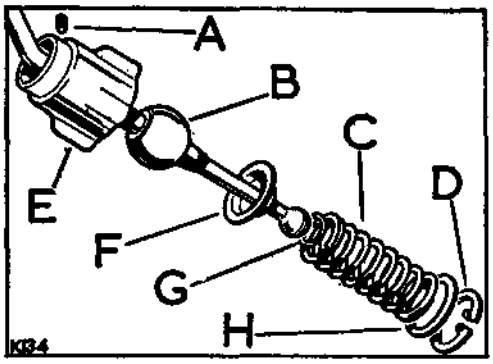


**Fig. C1-121. Housing for gear change lever**

A—Pin, locating lever ball
B—Gear change lever
C—Spring
D—Circlip
E—Housing for lever
F—Spherical seat
G—Rubber 'O' ring
H—Retaining plate

### Inspection

Examine the components visually and renew any that show obvious wear or damage.

### To assemble

Reverse the dismantling procedure.

When fitting the lever locating pin, ensure it engages the slot in the lever ball, then secure by peening.

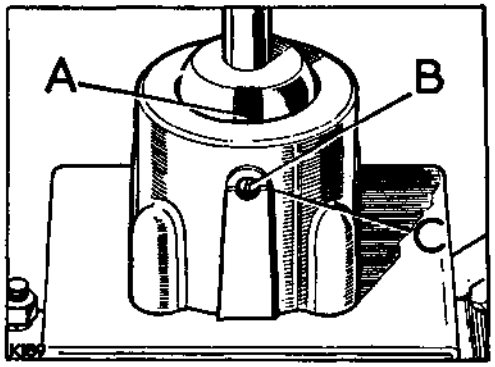


**Fig. C1-122. Locating lever in housing**

A—Slot in lever ball
B—Pin, lever location
C—Peen housing to secure pin

*Operations marked with an asterisk (*) can be carried out with the gearbox installed in the vehicle*

## *Reverse stop main gear change lever, remove, refit and adjust—Operation C1-13

Workshop hand tools:
Spanner size: 2 BA open end
Screwdriver (small)

### To remove

1. Remove the front floor. Operation A1-4.
2. Remove the hinge adjuster.

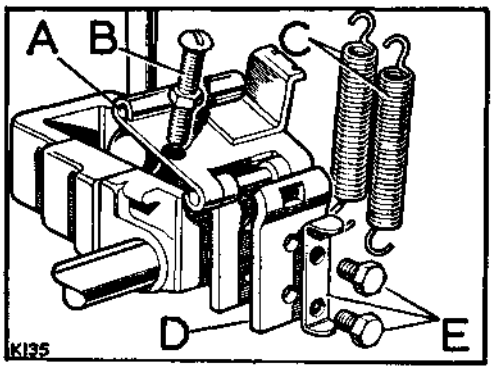


**Fig. C1-123. Reverse stop assembly**

A—Hinge, reverse stop
B—Adjuster, hinge
C—Springs, reverse stop
D—Bracket for springs
E—Fixings, hinge and bracket to selector shaft

3. Remove the hinge and bracket from the reverse selector shaft.
4. Detach the two springs.

### To refit

Reverse the removal procedure. Adjust the reverse stop before fitting the front floor.

Adjust the four wheel drive control lever. Operation A1-4.

### To adjust

1. Release the fixings and slide the reverse stop inspection cover up the four wheel drive selector lever.

**Note:** If the gear box cover does not incorporate an inspection cover, then the adjustment must be carried out before the gearbox cover is fitted.

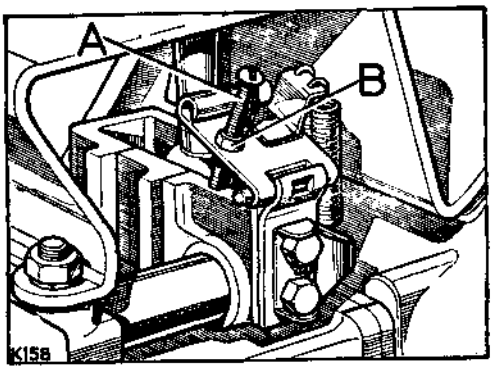


**Fig. C1-124. Adjusting the reserving stop**

A—Adjusting screw B—Locknut

2. Adjust the screw so that the hinge rides easily up the gear lever when reverse gear is selected, while at the same time appreciable resistance is felt on moving the gear lever to the reverse position.
3. Ensure that 1st gear engages correctly, if there is any tendency to simultaneously engage reverse gear, readjust the reverse stop.

## Clutch withdrawal unit, remove and refit—Operation C1-14

*(For overhaul instructions, Operation C1-15 refers)*

Workshop hand tools:
Spanner sizes: $\frac{1}{4}$ in. BSF, $\frac{5}{16}$ in. BSF sockets
Pliers

### To remove

1. Remove the front floor. Operation A1-4.
2. Remove the seat base. Operation C1-1.
3. Drain the gearbox lubricating oil. Operation C1-2.
4. Remove the gearbox assembly complete. Operation C1-3.
5. Remove the cross-shaft connecting tube from the clutch withdrawal unit.

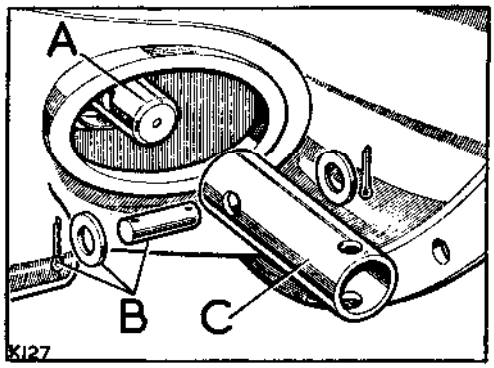


**Fig. C1-125. Connecting tube for clutch cross-shaft**

A—Clutch withdrawal unit
B—Fixings, connecting tube to clutch withdrawal unit
C—Connecting tube

6. Remove the clutch withdrawal unit.

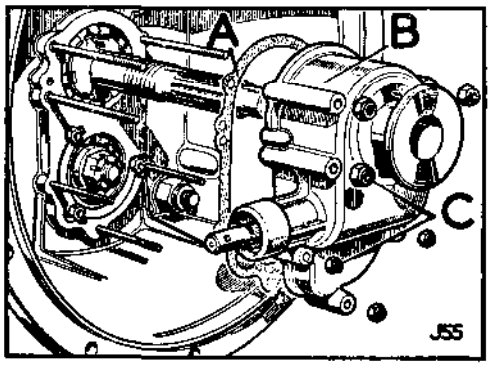


**Fig. C1-126. Clutch withdrawal unit**

A—Joint washer, clutch withdrawal unit to bell housing
B—Clutch withdrawal unit
C—Fixings, clutch withdrawal unit to bell housing

### To refit

1. Smear both sides of the joint washer with a general purpose grease and place in position on the bell housing.
2. Reverse the removal procedure, using 'Bostik' adhesive to attach the rubber grommet to the clutch withdrawal unit and the bell housing.
   Tighten the $\frac{1}{4}$ in. BSF nuts to a torque figure of 10 lb ft (1,4 mkg). Tighten the $\frac{5}{16}$ in. BSF nuts to a torque figure of 15 lb ft (2,0 mkg).

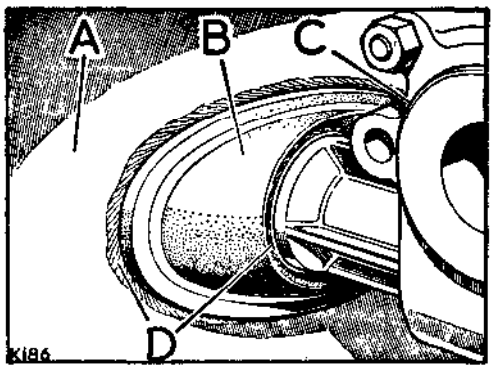


**Fig. C1-127. Grommet for clutch withdrawal unit**

A—Bell housing
B—Rubber grommet
C—Clutch withdrawal unit
D—Adhere in position

3. If necessary, bleed the clutch system and adjust the pedal movement. See Section B.
4. Check, and if necessary, replenish the gearbox lubricating oil. Operation C1-2.
5. Adjust the four wheel drive control lever. Operation A1-4.

## Clutch withdrawal unit, overhaul—Operation C1-15

*(For removal and refitting instructions, Operation C1-14 refers)*

Workshop hand tools:
Spanner sizes: $\frac{1}{4}$ in BSF open end
Mallet

### To dismantle

1. Remove the cross-shaft cover plate.
2. Drive out the cross-shaft from right to left, this will also release the operating fork, thrust washer and thrust spring.

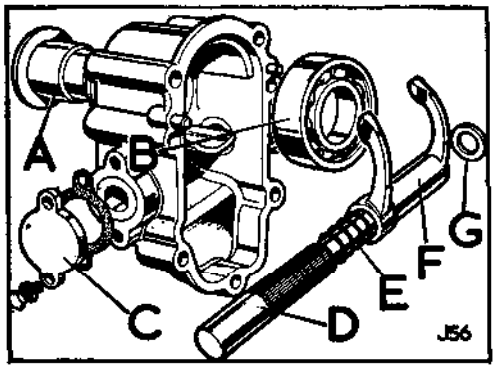


**Fig. C1-128. Clutch withdrawal unit**

A—Clutch withdrawal sleeve
B—Thrust bearing for withdrawal sleeve
C—Cover plate for cross-shaft
D—Cross-shaft
E—Spring for operating fork
F—Operating fork
G—Thrust washer for cross-shaft

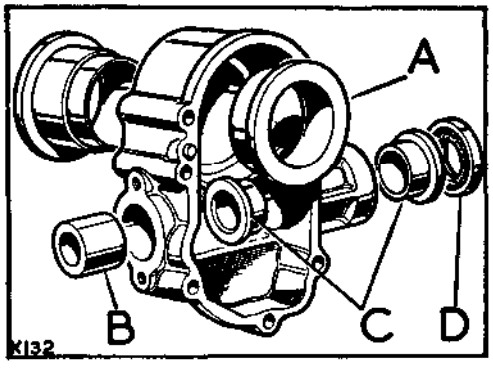


**Fig. C1-129. Bushes and oil seal for withdrawal housing**

A—Bush, clutch withdrawal sleeve
B—Bush, cross-shaft, right-hand side
C—Bush, cross-shaft, left-hand side
D—Oil seal

3. Press the withdrawal sleeve from the bearing.
4. Remove the cross-shaft oil seal.
5. Press out the cross-shaft bushes and the withdrawal sleeve bush.

### Inspection

Renew any components which show obvious wear or damage.

All bushes must be a press fit in the housing and a sliding fit on the cross-shaft or withdrawal sleeve.

Ensure that the oil scroll machined on the primary pinion is not damaged, a faulty scroll may result in oil reaching the clutch, causing slip.

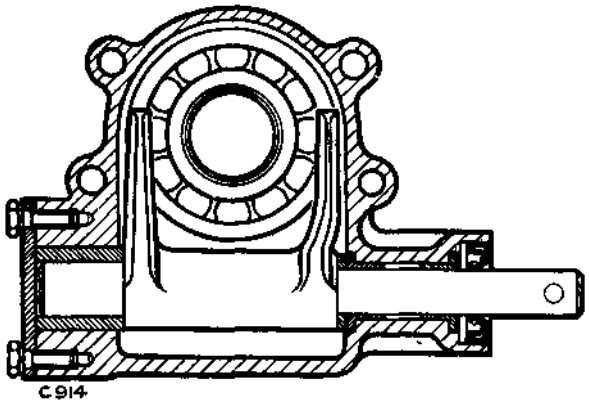


**Fig. C1-130. Cross-section of withdrawal mechanism**

### To assemble

1. Fit the bushes for the cross-shaft and withdrawal sleeve to the housing.

   The plain bush for the cross-shaft must be reamered to .751 in. + .001 in. (19,0754 mm + 0,0254 mm) after fitting.

   The flanged bushes for the cross-shaft must be reamered to .6257 in. + .001 in. (15,8928 mm + 0,0254 mm) after fitting.

   The bush for the withdrawal sleeve must be reamered to 1.625 in. + .002 in. (41,2650 mm + 0,0508 mm) after fitting.
2. Fit the withdrawal sleeve and thrust bearing.

## Operation C1-15—*continued*

3. Fit the oil seal, knife edge inwards.
4. Place the withdrawal fork, thrust washer and spring in position.
5. Place a $\frac{7}{16}$ in. (11 mm) diameter bar between the withdrawal sleeve and the housing, to give the required position of the withdrawal fork when the cross shaft is inserted.
6. Ensure the withdrawal fork is in contact with the bearing, and the $\frac{7}{16}$ in. (11 mm) diameter bar is trapped between the withdrawal sleeve and the housing, then insert the cross-shaft, with linkage connecting drilling in line with the withdrawal sleeve.
7. Fit the cover plate and joint washer.

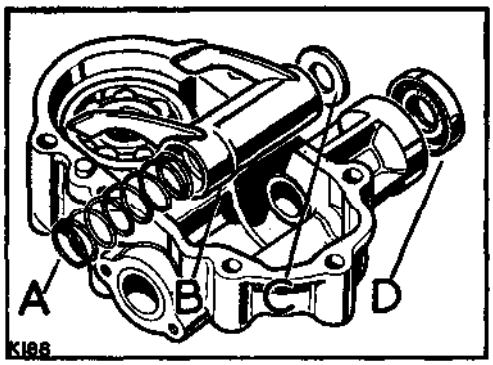


**Fig. C1-131. Fitting withdrawal fork**

A—Spring
B—Withdrawal fork
C—Thrust washe.
D—Oil seal

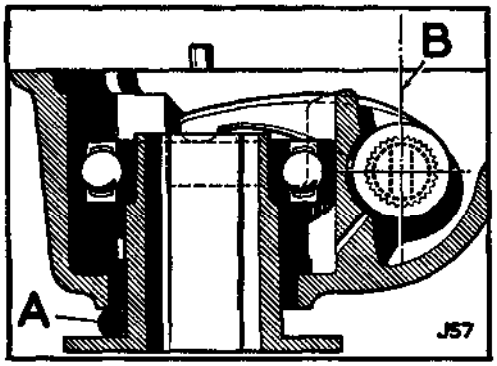


**Fig. C1-132. Setting clutch withdrawal mechanism**

A—$\frac{7}{16}$ in. (11 mm) diameter bar
B—Connecting drilling in line with withdrawal sleeve

## Bell housing, remove and refit—Operation C1-16

*(For overhaul instructions, Operation C1-17 refers)*

Workshop hand tools:
Spanner sizes: $\frac{1}{2}$ in. BSF, $\frac{11}{16}$ in. BSF sockets

**To remove**

1. Remove the front floor. Operation A1-4.
2. Remove the seat base. Operation C1-1.
3. Drain the gearbox lubricating oil. Operation C1-2.
4. Remove the gearbox assembly complete. Operation C1-3.
5. Remove the main gearchange lever. Operation C1-11.
6. Remove the clutch withdrawal unit. Operation C1-14.
7. Disconnect the transfer gear lever from the bracket at the bell housing, withdraw the lever, taking care to retain the spring strip located between the lever ball and link.

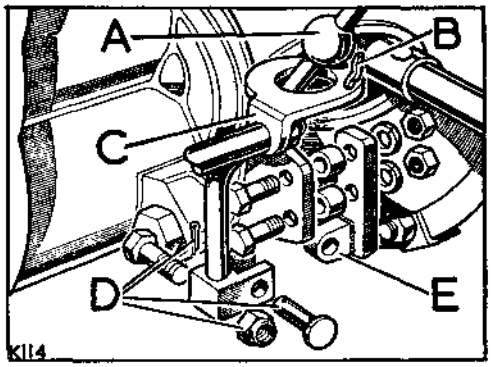


**Fig. C1-133. Transfer gear lever**

A—Transfer gear lever
B—Spring, lever ball to link
C—Link for lever
D—Alternative fixings, lever to bell housing
E—Bracket, lever to bell housing

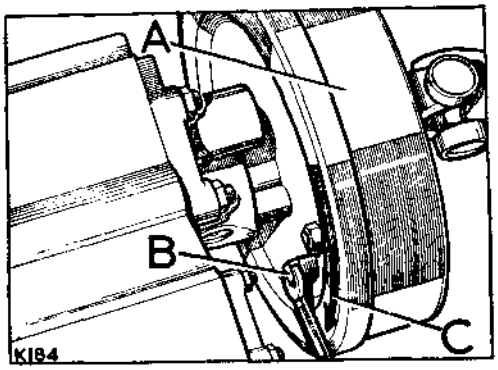


**Fig. C1-134. Locking transmission brake**

A—Transmission brake
B—Brake adjuster
C—Adjust as indicated to lock 'hard on'

8. Fully adjust the transmission brake to lock 'hard on'.
9. Select any gear and remove the split pin, nut and washer securing the gearbox layshaft. DO NOT remove the special nut from the primary pinion.

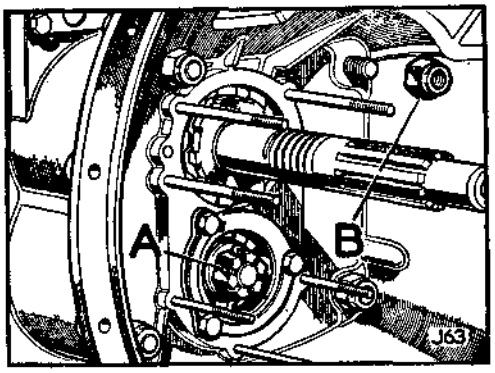


**Fig. C1-135. Bell housing fixings**

A—Fixings, gearbox layshaft
B—Fixings (4 off) bell housing to main gearbox

10. Remove the bell housing fixings. Hold the layshaft depressed fully rearwards and ease the housing from the gearbox, taking care to catch the constant gear and conical distance piece which will be released.

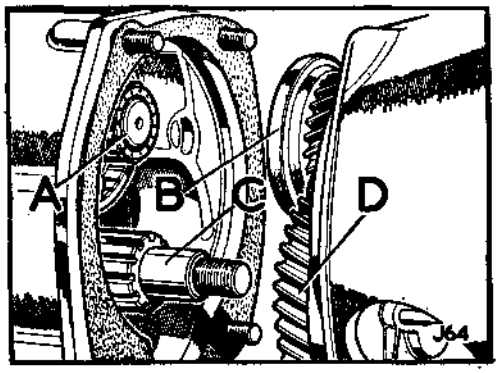


**Fig. C1-136. Bell housing location**

A—Gearbox mainshaft
B—Primary pinion
C—Gearbox layshaft
D—Constant gear

## Operation C1-16—*continued*

### To refit

**Note:** Two of the bell housing to gearbox securing bolts are special fitted bolts, and must be positioned diagonally opposite.

1. Smear both sides of the joint washer with a general purpose grease and place in position on the gearbox.
2. Ensure that the roller bearing for the primary pinion is in position, then locate the conical distance piece and constant gear in place, in mesh with the primary pinion, on the rear face of the bell housing.

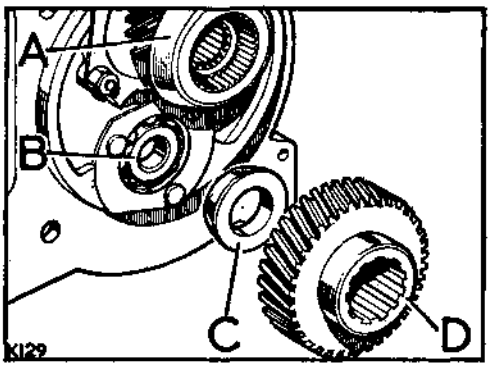


**Fig. C1-137. Location of conical distance piece**

A—Primary pinion
B—Bearing for layshaft
C—Conical distance piece
D—Constant gear

3. Retain the constant gear and conical distance piece in position, by holding through the layshaft bearing, from the inside of the bell housing, then offer the bell housing to the gearbox, using special care to align the constant gear with the splines on the layshaft.
4. Complete the reassembly by reversing the removal procedure. The layshaft securing nut must be tightened to a torque figure of 75 lb ft (10,0 mkg).
5. Check and replenish the gearbox lubricating oil. Operation C1-2.
6. Adjust the transmission brake.
7. Adjust the four wheel drive control lever. Operation A1-4.

## Bell housing, overhaul—Operation C1-17

*(For removal and refitting instructions, Operation C1-16 refers)*

Workshop hand tools:
Spanner sizes: $\frac{5}{16}$ in. BSF ring spanner, $\frac{1}{2}$ in. AF socket
Mallet, Punch

### To dismantle

1. Remove the retainer and bearing plate, then press the layshaft bearing from the bell housing.

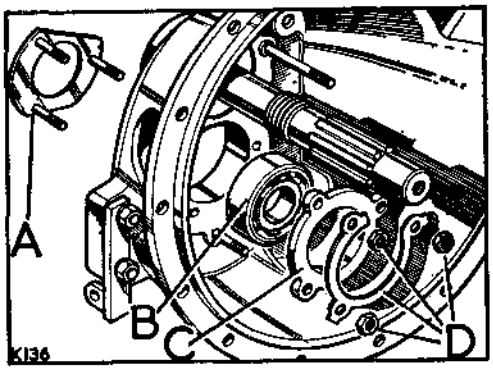


**Fig. C1-138. Layshaft bearing**

A—Retainer for bearing
B—Bearing for layshaft
C—Retaining plate for bearing
D—Fixings, bearing retainer

2. Remove the fixings and press the primary pinion and bearing assembly from the bell housing.

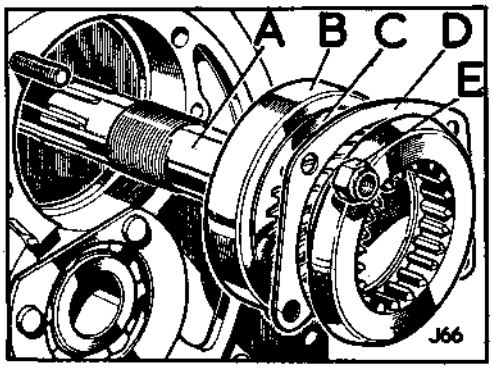


**Fig. C1-139. Primary pinion and bearing assembly**

A—Primary pinion
B—Bearing for pinion
C—Shield for pinion
D—Retaining plate for pinion
E—Fixings, retaining plate

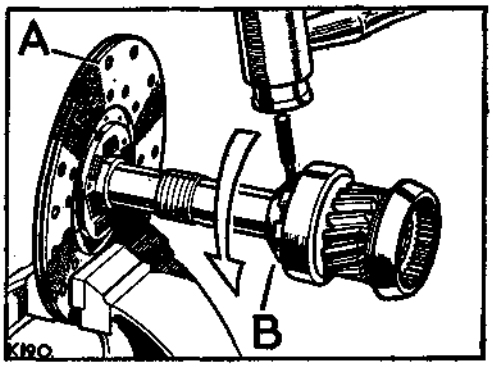


**Fig. C1-140. Removing nut from primary pinion**

A—Old clutch plate
B—Unscrew nut as indicated

3. Remove the special LEFT HAND THREAD nut from the primary pinion.

**Note:** An old clutch plate or gearbox output flange secured in a vice, can be used to hold the primary pinion while removing the nut.

4. Press the bearing and shield from the primary pinion.

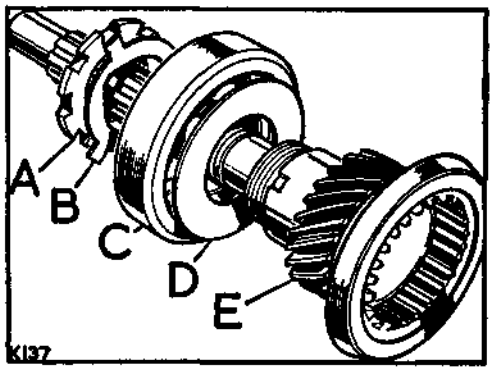


**Fig. C1-141. Primary pinion assembly**

A—Special nut, LEFT HAND THREAD
B—Lock washer
C—Bearing for primary pinion
D—Shield for primary pinion
E—Primary pinion

## Operation C1-17—*continued*

### Inspection

Renew any components which show obvious wear or damage. Renew the lockwasher for the special LH thread nut. Ensure that the oil scroll machined on the primary pinion is not damaged, a faulty scroll may result in oil reaching the clutch, causing slip, check that the clutch plate slides freely on the primary pinion splined shaft.

### To assemble

1. Fit the shield for the primary pinion in place, with the dished side towards the pinion.
2. Press the bearing on to the primary pinion.
3. Fit the lockwasher and special LEFT-HAND THREAD nut, tighten the nut and engage the lockwasher, see Figs. C1-141 and C1-140.
4. Press the primary pinion and bearing assembly into the bell housing, and secure the fixings, see Fig. C1-139.
5. Press the layshaft bearing into the bell housing, and secure the fixings, see Fig. C1-138.

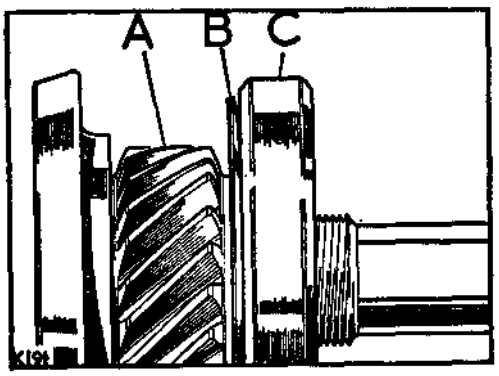


**Fig. C1-142. Correct location of dished shield**

A—Primary pinion
B—Dished edge of shield
C—Bearing

## *Gear selector shafts, remove, refit and adjust—Operation C1-18

*(For overhaul instructions, Operation C1-19 refers)*

Workshop hand tools:
Spanner sizes: 2 BA, $\frac{1}{4}$ in. BSF, $\frac{5}{16}$ in. BSF, $\frac{3}{8}$ in. BSF open end
Screwdriver (medium)

### To remove

1. Remove the front floor. Operation A1-4.
2. Remove the seat base. Operation C1-1.
3. Remove the main gear change lever. Operation C1-11.
4. Remove the three selector springs and pack the drillings in the top cover with grease, to prevent the selector balls from falling into the gearbox when the cover is removed.

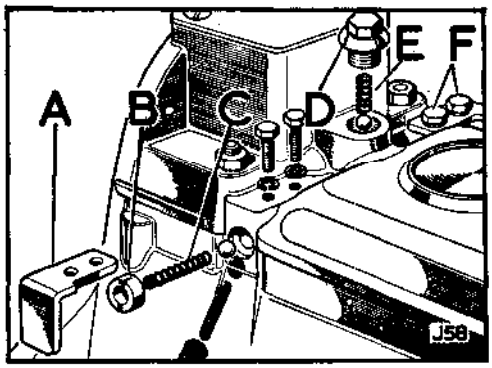


**Fig. C1-143. Selector springs and balls**

A—Retainer plate
B—Rubber sealing grommet
C—Spring reverse selector shaft
D—Plug
E—Spring, 1st-2nd selector shaft
F—Fixings, 3rd-4th selector spring

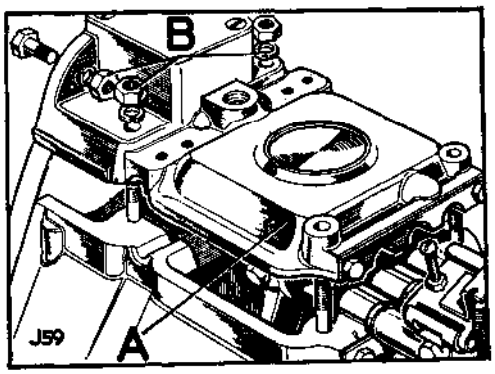


**Fig. C1-144. Gearbox top cover**

A—Top cover
B—Fixings, top cover to gearbox and transfer box

5. Remove the top cover from the gearbox and collect the three selector balls.
6. Select first gear. Remove the reverse gear selector shaft by lifting and turning the shaft through approximately a quarter of a turn to the left. Lift the interlocking plunger from the top of the gearbox.

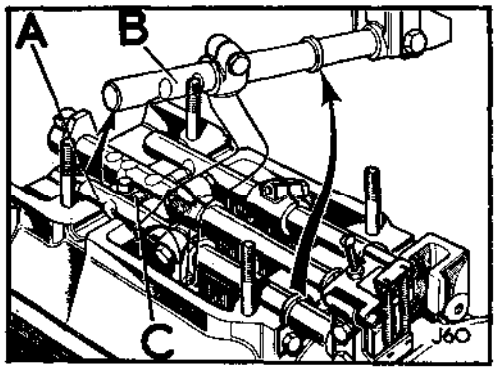


**Fig. C1-145. Removing reverse gear selector shaft**

A—Reverse selector shaft in position
B—Method of removal
C—Interlocking plunger

7. Move the 1st–2nd speed selector shaft into the 2nd gear position, that is to the front, then lift it clear. Lift the interlocking plunger from the top of the gearbox.

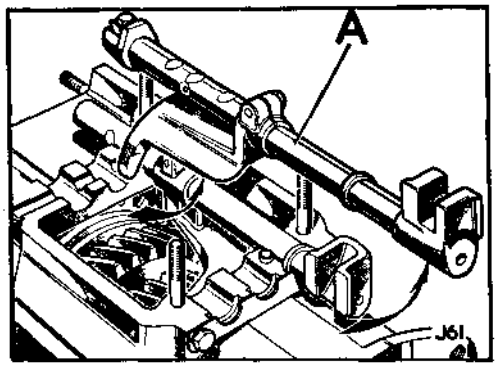


**Fig. C1-146. Removing 1st-2nd speed selector shaft**

A—Selector shaft, 1st-2nd speed

*Operations marked with an asterisk (*) can be carried out with the gearbox installed in the vehicle*

## Operation C1-18—*continued*

8. Move the 3rd–4th selector shaft into the 3rd gear position, that is to the rear, then lift it clear.

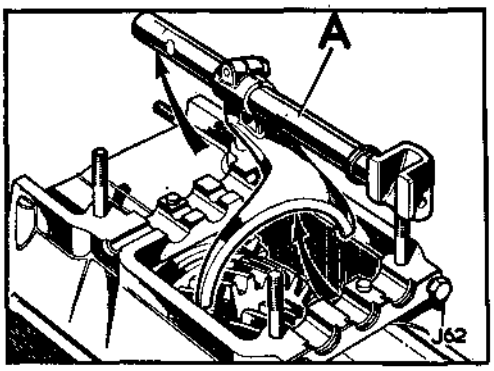


**Fig. C1-147. Removing 3rd-4th selector shaft**

A—Selector shaft, 3rd-4th speed

### To refit

1. Move the inner member of the synchromesh unit into the third gear position (fully rearwards), and fit the 3rd–4th selector shaft and fork. Ensure that the shaft seal is located in the groove casing.

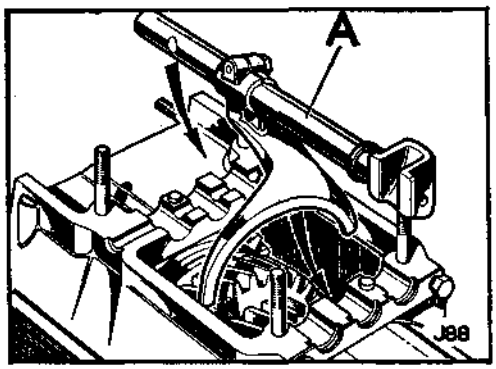


**Fig. C1-148. Fitting 3rd-4th selector shaft**

A—Selector shaft, 3rd-4th speed

2. Move the inner member of the 3rd–top synchromesh unit to the neutral position, and engage second gear, that is, move the 1st–2nd speed gear fully rearwards. Fit the 1st–2nd selector shaft and fork, locating the seal correctly.

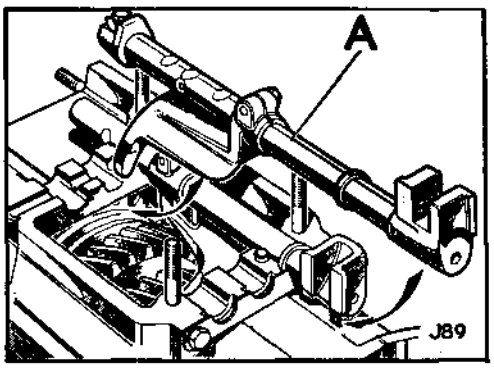


**Fig. C1-149. Fitting 1st-2nd selector shaft**

A—Selector shaft, 1st-2nd speed

3. Move the 1st–2nd selector shaft into the first gear position, that is, fully rearward, also move the reverse idler gear fully forward, then fit the reverse gear selector shaft by reversing the removal procedure.

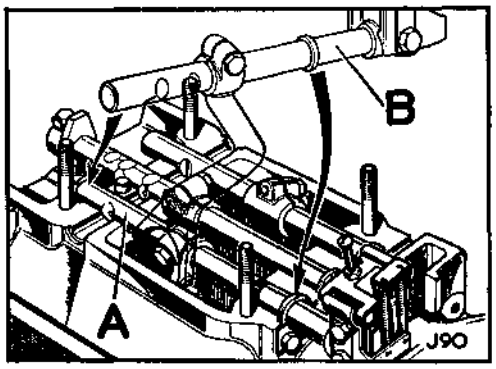


**Fig. C1-150. Fitting the reverse gear selector shaft**

A—Reverse selector shaft in position
B—Method of fitting

4. Place all selectors in the neutral position and fit the interlocking plungers.
5. Fit the gearbox top cover, selector balls, springs, rubber seals and retainers. Note that the reverse selector detent spring is stronger, being of slightly thicker material. Also the cut-away top edge of the retaining plates must face towards the front of the gearbox.

## Operation C1-18—*continued*

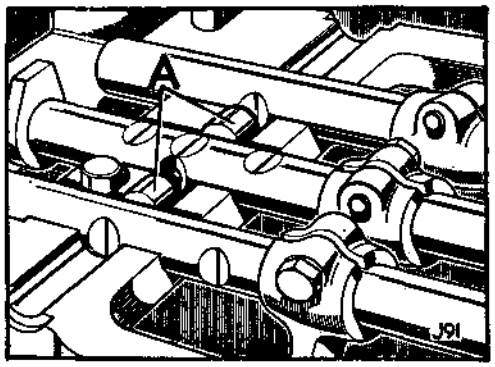


**Fig. C1-151. Selector shafts and plungers**

A—Interlocking plungers

6. Check the operation of all three selector shafts.

7. Select 2nd gear and adjust the second speed stop bolt so that there is .002 in. (0,05 mm) clearance between the bolt head and the stop on the selector shaft, tighten the locknut.

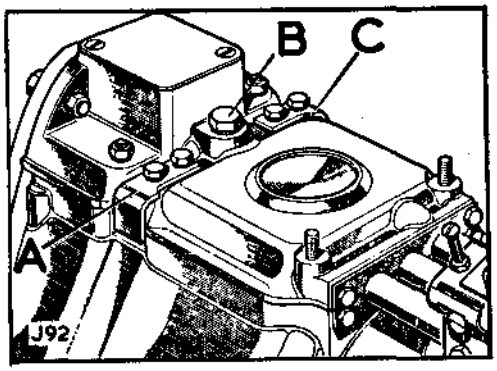


**Fig. C1-152. Gearbox top cover**

A—Retaining plate, reverse gear selector spring and ball
B—Retaining plug, 1st-2nd speed selector spring and ball
C—Retaining plate, 3rd-top speed selector spring and ball

8. Select reverse gear and adjust the reverse gear stop bolt so that there is .002 in. (0,05 mm) clearance between the selector shaft and the end of the bolt, tighten the locknut.

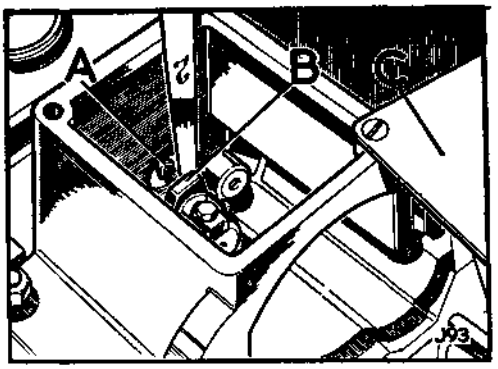


**Fig. C1-153. Adjusting 2nd speed stop bolt**

A—Set bolt and locknut for 2nd speed stop
B—Stop for 2nd gear
C—Inspection cover

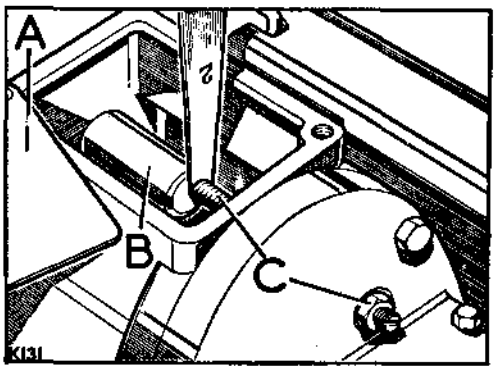


**Fig. C1-154. Adjusting reverse gear stop bolt**

A—Inspection cover
B—Reverse gear selector shaft
C—Set bolt and locknut for second speed stop

**Note:** If the transfer box has been removed from the main gearbox, the foregoing adjustment must be carried out after the transfer box has been refitted.

9. Complete the re-assembly by reversing the removal procedure.

10. Adjust the four wheel drive control lever. Operation A1-4.

## *Gear selector shafts, overhaul—Operation C1-19

*(For removal and refitting instructions, Operation* C1-18 *refers)*

Workshop hand tools:
Spanner sizes: $\frac{1}{4}$ in. BSF, $\frac{5}{16}$ in. BSF open end

### To dismantle

1. Remove the stop from the reverse selector shaft. Operation C1-13.
2. Remove the stop from the 1st–2nd gear selector shaft.
3. Remove the forks and seals from the selector shafts.

### Inspection

Examine the components visually and renew any that show obvious wear or damage.

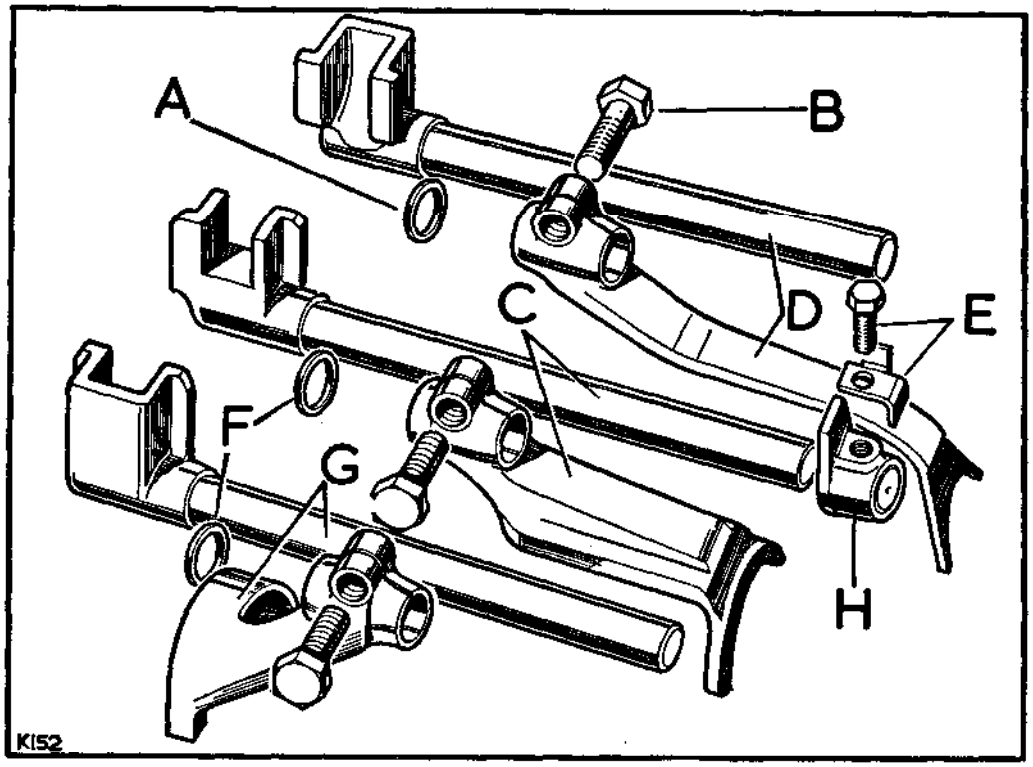


**Fig. C1-155. Selector Shafts**

A—Seal, reverse gear selector shaft
B—Fixing, selector fork
C—1st-2nd gear selector shaft and fork
D—Reverse gear selector shaft and fork
E—Fixings, 1st-2nd stop
F—Seal, forward selector shafts
G—3rd-4th gear selector shaft and fork
H—Stop, 1st-2nd gear selector shaft

*Operations marked with an asterisk (*) can be carried out with the gearbox installed in the vehicle*

## Operation C1-19—*continued*

### To re-assemble

1. Fit the sealing rings to the selector shafts, noting that the bore of the seal is tapered and the thinner edge must face towards the front of the gearbox. Also the seal for the reverse shaft differs in size from the other two.

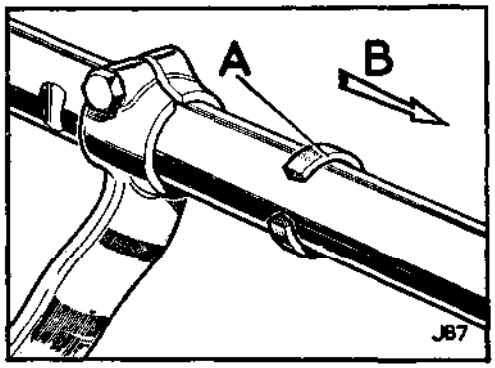


**Fig. C1-156. Selector shaft seal location**

A—Thin edge of seal
B—To front of gearbox

2. Fit the selector forks to their shafts. Align the selector fork pinch bolt holes with the groove in the top of the shaft, and in the case of the 1st–2nd gear selector shaft, the groove nearest the front.

**Note:** There is radial movement between the selector fork and shaft before the pinch bolt is tightened, and the fork should be secured in the mid-position.

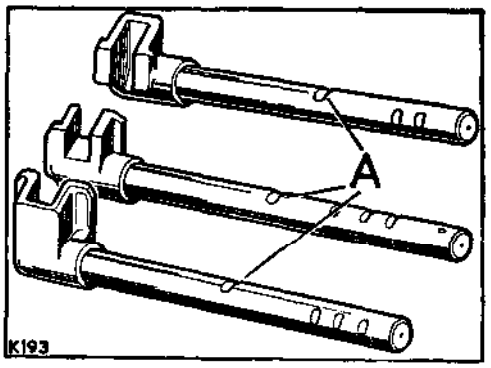


**Fig. C1-157. Location of selector forks on shafts**

A—Grooves for selector fork pinch bolts

3. Fit the stop to the 1st–2nd gear selector shaft.
4. Fit the stop to the reverse selector shaft. Operation C1-13.

## Gearbox layshaft, remove and refit—Operation C1-20

*(For overhaul instructions, Operation C1-21 refers)*

### To remove

1. Remove the front floor. Operation A1-4.
2. Remove the seat base. Operation C1-1.
3. Drain the gearbox lubricating oil. Operation C1-2.
4. Remove the gearbox assembly complete. Operation C1-3.
5. Remove the main gear change lever. Operation C1-11.
6. Remove the clutch withdrawal unit. Operation C1-14.
7. Remove the bell housing. Operation C1-16.
8. Withdraw the synchronising clutch unit from the mainshaft then withdraw the layshaft assembly from the gearbox.
   Refer to Operation C1-25 for removal of the layshaft rear bearing outer race.

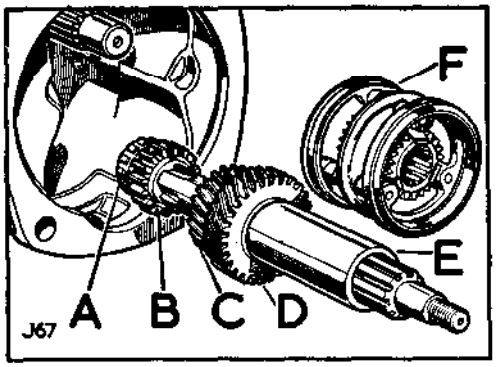


**Fig. C1-158. Layshaft and synchronising clutch**

A—Rear bearing for layshaft
B—1st speed layshaft gear
C—2nd speed layshaft gear
D—3rd speed layshaft gear
E—Sleeve for layshaft
F—Synchronising clutch

### To refit

**Note:** If any layshaft components have been renewed, the checks described under 'Gearbox layshaft overhaul', must be carried out.

1. Insert the assembled layshaft into the gearbox, locating the gear into its outer race.
2. Fit the synchronising clutch to the mainshaft with the recessed end of the inner member toward the third speed gear.
3. Place the bell housing joint washer in position.
4. Ensure that the roller bearing for the primary pinion is in position, then locate the conical distance piece and constant gear in place, in mesh with the primary pinion, on the rear face of the bell housing.

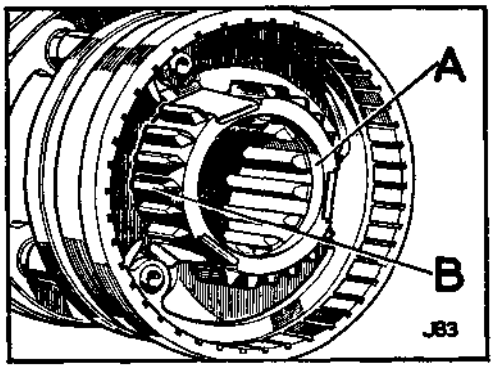


**Fig. C1-159. Synchronising clutch**

A—Recess on inner splines
B—Thicker teeth

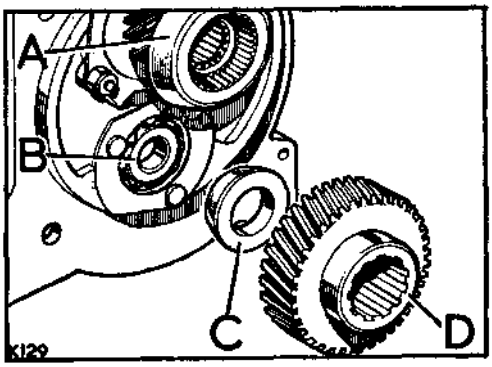


**Fig. C1-160. Location of conical distance piece**

A—Primary pinion
B—Bearing for layshaft
C—Conical distance piece
D—Constant gear

5. Retain the constant gear and conical distance piece in position, by holding through the layshaft bearing from inside the bell housing, then offer the bell housing to the gearbox, using special care to align the constant gear with the splines on the layshaft.
6. Complete the re-assembly by reversing the removal procedure.
   The layshaft securing nut must be tightened to a torque figure of 75 lb ft (10,0 mkg).
   Adjust the transmission brake.
   Check and replenish the gearbox lubricating oil. Operation C1-2.
   Adjust the four wheel drive control lever. Operation A1-4.

## Gearbox layshaft, overhaul—Operation C1-21

*(For removal and refitting instructions, Operation* C1-20 *refers)*

Workshop hand tools:
Spanner size: 1⅛ in. AF

1. Withdraw the sleeve and the 2nd and 3rd speed gears from the layshaft.

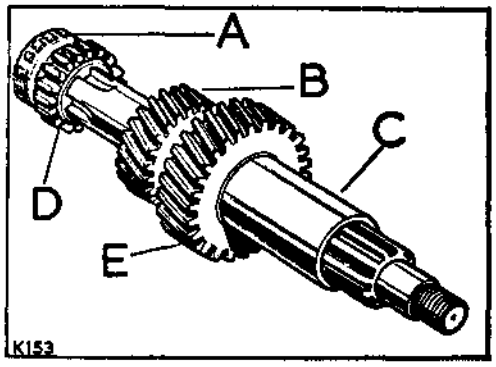


**Fig. C1-161. Layshaft assembly**

A—Rear bearing for layshaft
B—2nd speed gear
C—Sleeve for layshaft
D—1st speed gear
E—3rd speed gear

2. Press the first speed gear and bearing from the layshaft.

   Refer to Operation C1-25 for removal of the layshaft rear bearing outer race.

### Inspection

Examine the components visually for wear or damage.

### To assemble, including tolerance checks

1. Fit the 1st speed gear, chamfered side of teeth first, on to the layshaft.
2. Press the layshaft rear bearing on to the shaft to abut with the 1st speed gear.

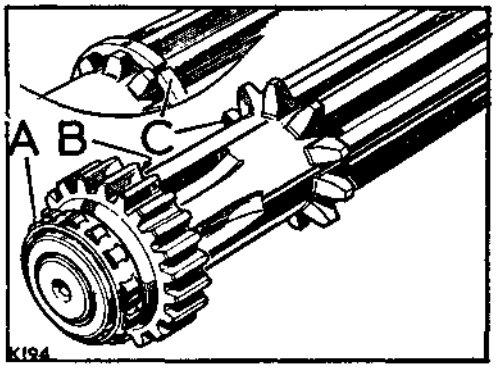


**Fig. C1-162. Layshaft rear bearing and 1st speed gear**

A—Bearing
B—Chamfered teeth on 1st speed gear
C—Integral shoulder (or split ring on early shafts) for 2nd speed gear location

3. Early type layshafts, fit the split ring for the 2nd speed gear to the groove in the shaft.

   **Note:** Later type shafts are provided with a shoulder in place of the split ring.

4. Fit the 2nd speed gear, recessed side first, and locate it over the split ring or shaft shoulder, as applicable.

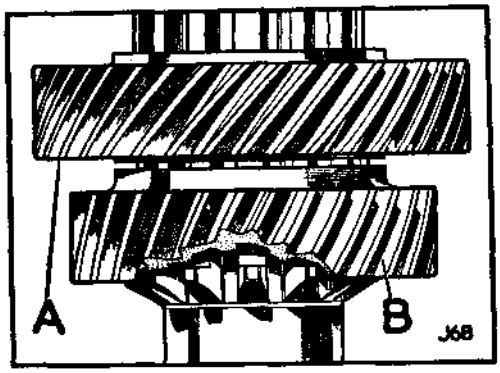


**Fig. C1-163. 2nd and 3rd speed gear location**

A—3rd speed gear
B—2nd speed gear

5. Fit the 3rd speed gear, narrow shoulder side first, then fit the sleeve to the layshaft.
6. Place the conical distance piece and constant gear in position, in mesh with the primary pinion on the rear face of the bell housing.
7. Locate the layshaft in position on the bell housing and secure with the plain washer and castle nut.

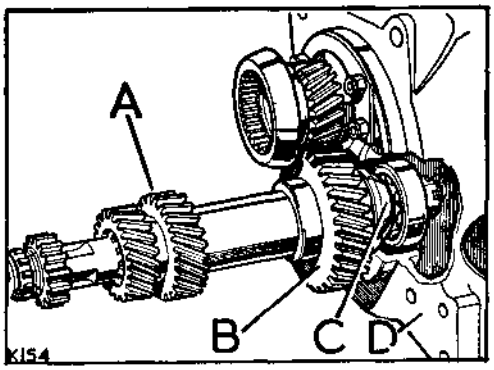


**Fig. C1-164. Layshaft pre-assembly check**

A—Layshaft
B—Constant gear
C—Conical distance piece
D—Bell housing

## Operation C1-21—*continued*

8. Ensure that the layshaft assembly is locked up tightly and that the gears are not tilted by excessive run-out, either on their faces or those of the distance piece. The gears must not have any end float on the shaft, if end float is present, fit a new sleeve and re-check.

9. Remove the layshaft assembly from the bell housing.

**Important.** When fitting the layshaft into the gearbox, carry out the following check after fitting the bell housing, but before fitting the layshaft securing nut.

1. Check that the layshaft has a definite but minimum end float.

2. If no end float is present, dismantle the assembly and fit a thinner conical distance piece, these are available in a range of thicknesses.

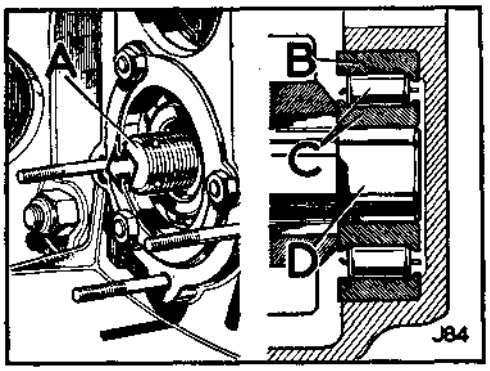


**Fig. C1-165. Layshaft end float check**

A—Move layshaft as indicated to check for minimum end float
B—Outer race, layshaft rear bearing
C—Roller bearing and inner race correctly located in outer race
D—Layshaft, rear end

**Note:** Layshaft end float is necessary to ensure that the rear bearing locates correctly within its outer race, and is not pressing hard against the lip at the rear of the outer race.

## Gearbox mainshaft, remove and refit—Operation C1-22

*(For overhaul instructions, Operation C1-23 refers)*

Workshop hand tools:
Spanner size: $\frac{3}{8}$ in. BSF socket
Mallet

Special tools:
Tool for mainshaft rear nut, Part No. 600300

### To remove

1. Remove the front floor. Operation A1-4.
2. Remove the seat base. Operation C1-1.
3. Drain the gearbox lubricating oil. Operation C1-2.
4. Remove the gearbox assembly complete. Operation C1-3.
5. Remove the main gear change lever. Operation C1-11.
6. Remove the clutch withdrawal unit. Operation C1-14.
7. Remove the bell housing. Operation C1-16.
8. Remove the selector shafts. Operation C1-18.
9. Remove the layshaft. Operation C1-20.

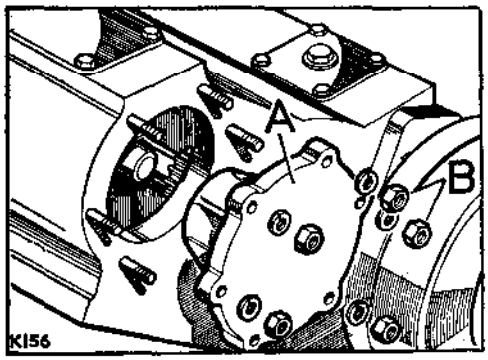


**Fig. C1-166. Rear bearing housing**
A—Bearing housing B—Fixings

10. Remove the rear bearing housing from the transfer box.

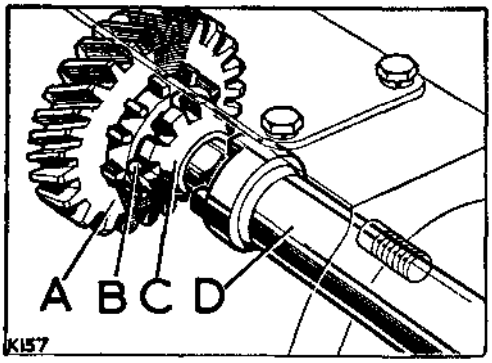


**Fig. C1-167. Removing transfer gear securing nut**
A—Mainshaft gear for transfer box
B—Lockwasher
C—Special nut
D—Special tool, Part Number 600300

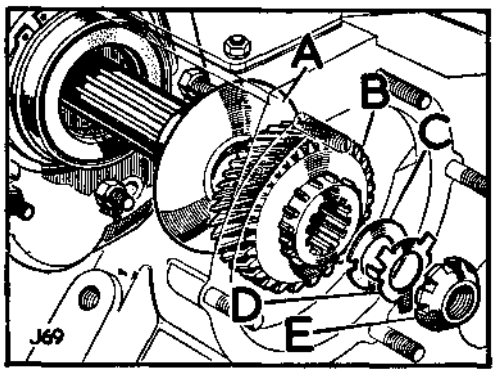


**Fig. C1-168. Mainshaft gear for transfer box**
A—Oil thrower
B—Mainshaft gear
C—Shim washer
D—Lockwasher
E—Special nut

11. Using special tool, Part No. 600300, remove the mainshaft gear for transfer box.
12. Drive the mainshaft out from the gearbox.

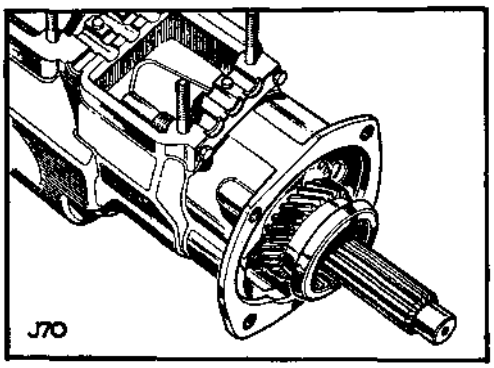


**Fig. C1-169. Removing mainshaft from gearbox**

### To refit

**Note:** If any mainshaft components have been renewed, the checks described under 'Gearbox mainshaft overhaul' must be carried out.

1. Place the oil thrower in position, locating the sleeve into the gearbox oil seal.

## Operation C1-22—*continued*

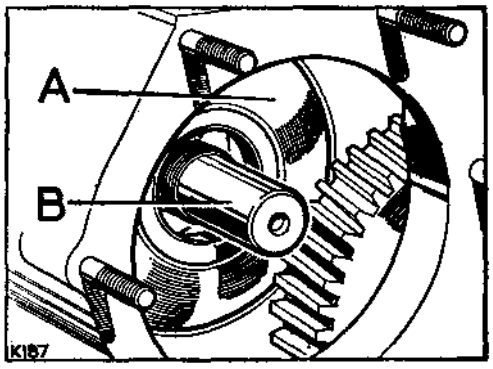


**Fig. C1-170. Fitting the gearbox mainshaft**
A—Oil thrower B—Main shaft

2. Locate the assembled mainshaft into the gearbox and drive into position.
3. Fit the mainshaft transfer gear, and engage the lockwasher to secure the special nut.
4. Complete the re-assembly by reversing the removal procedure.
5. Replenish the gearbox lubricating oil. Operation C1-2.
6. Adjust the four wheel drive control lever. Operation A1-4.

## Gearbox mainshaft, overhaul—Operation C1-23

*(For removal and refitting instructions, Operation C1-22 refers)*

Workshop hand tools:
Screwdriver (small), Feeler gauges

### To dismantle

1. Withdraw the first speed gear.

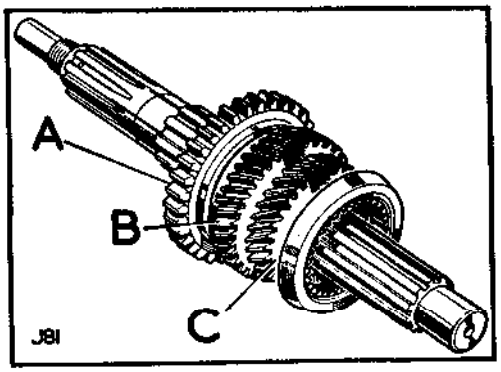


**Fig. C1-171. Mainshaft assembly**

A—1st speed gear
B—2nd speed gear
C—3rd speed gear

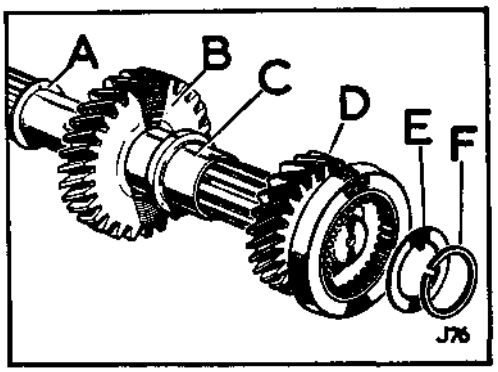


**Fig. C1-173. Mainshaft components**

A—Thrust washer, 2nd speed gear
B—2nd speed gear
C—Distance sleeve
D—3rd speed gear
E—Thrust washer, 3rd speed gear
F—Spring ring

2. Prise the spring ring from the groove in the mainshaft, and withdraw the thrust washer, third speed gear, distance sleeve and second speed gear.

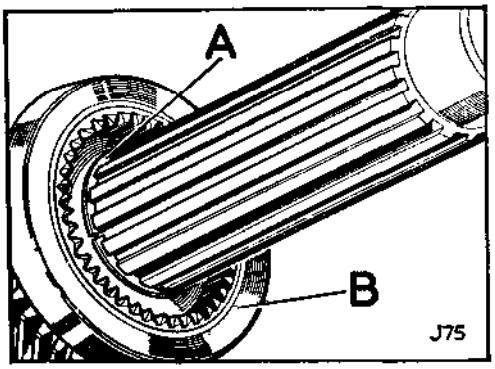


**Fig. C1-172. Location of spring ring**

A—Spring ring retaining mainshaft gears
B—3rd speed gear

3. If it is required to remove the thrust washer for the second speed gear, first remove the locating peg for the distance sleeve, the peg is a press fit in the mainshaft.

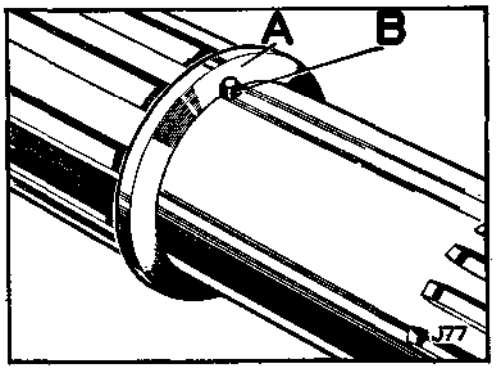


**Fig. C1-174. Thrust washer for 2nd speed gear**

A—Thrust washer
B—Peg for distance sleeve

## Operation C1-23—*continued*

### Inspection

1. Examine all components for wear or damage.
2. Discard the mainshaft spring ring. Use a new replacement on assembly.
3. Check the synchronising clutch for wear, the detent springs can be replaced if required.
4. Examine the distance sleeve for the mainshaft. A new sleeve manufactured from improved material has been introduced and is fully interchangeable with the earlier type. The new sleeve can be identified by a small annular groove cut in the outside diameter of the central flange, the earlier sleeve has a plain flange.

   It is recommended that only the new type sleeves are fitted as replacements, and early type sleeves should be discarded.

### To assemble, including tolerance checks

1. If the thrust washer for the second speed gear has been removed from the mainshaft, place the washer in position, engaging it over its locating peg, but do not fit the locating peg for the distance sleeve at this stage.
2. Fit the second speed gear, dog coupling side last, to the end of the distance sleeve with the larger slot.

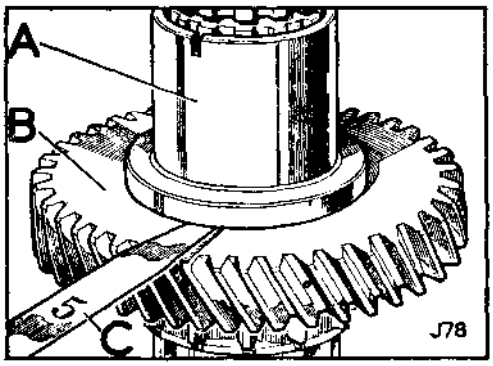


**Fig. C1-175. End float check, 2nd speed gear**

A—Distance sleeve
B—2nd speed gear
C—Feeler gauge

3. Slide the gear and sleeve assembly on to the mainshaft to abut with the thrust washer, then holding the sleeve hard against the thrust washer, check the end float of the second speed gear, this must be .004 in. to .007 in. (0,10 mm to 0,18 mm).

   **Note:** The end float of the second and the third speed gears is controlled by the length of the distance sleeve. With a new sleeve, the clearance may be excessive and can be corrected by rubbing down the end face of the sleeve on a face plate and emery cloth, ensuring that the applicable end of the sleeve is rubbed down. In the event of insufficient clearance, a new sleeve must be fitted.

4. Retain the second speed gear and distance sleeve on the mainshaft and fit the third speed gear and thrust washer. Hold the thrust washer hard against the sleeve and check the end-float of the third speed gear, this must be .004 in. to .007 in. (0,10 mm to 0,18 mm). End float adjustment is as already described.

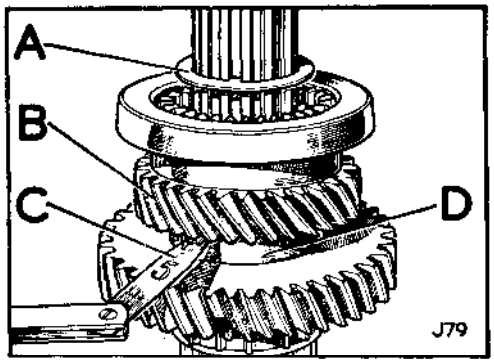


**Fig. C1-176. End float check, 3rd speed gear**

A—Thrust washer
B—Third speed gear
C—Feeler gauge
D—Distance sleeve

5. Remove the gears and distance sleeve from the mainshaft and refit the thrust washers and distance sleeve only, retain in position with the old spring ring.
6. Check the end float of the distance sleeve, this must be .001 in. to .008 in. (0,03 mm to 0,20 mm). Adjustment is made by changing either of the thrust washers which are available in a range of thicknesses.

## Operation C1-23—*continued*

7. When the end float of the mainshaft gears and distance piece are correct, remove the spring ring, thrust washer for third speed gear and the distance sleeve. If removed, fit the distance sleeve locating peg to the mainshaft, ensuring that the thrust washer for the second speed gear is engaged on its locating peg.

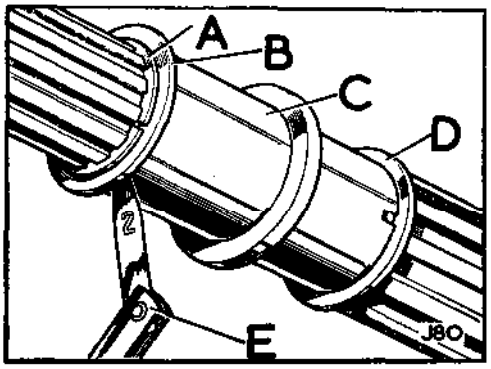


**Fig. C1-177. End float check, distance sleeve**

A—Spring ring
B—Thrust washer, 3rd speed gear
C—Distance sleeve
D—Thrust washer, 2nd speed gear
E—Feeler gauge

8. Fit the second speed gear, distance sleeve, third speed gear and thrust washer to the mainshaft, retain with a new spring ring, DO NOT use an old spring ring.
9. Fit the first speed gear on to the mainshaft, engaging the second speed gear dog clutch.

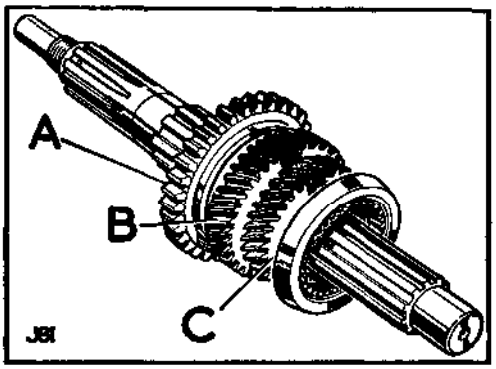


**Fig. C1-178. Mainshaft assembly**

A—1st speed gear
B—2nd speed gear
C—3rd speed gear

## Gearbox main casing and reverse gear, remove and refit—Operation C1-24

*(For overhaul instructions, Operation C1-25 refers)*

**Note:** If it is required to change the rear main oil seal only, it is not necessary to completely dismantle the gearbox. The oil seal is accessible after removing the intermediate gear and the mainshaft gear from the transfer box, see Operations C1-7 and C1-22 for details.

### To remove

1. Remove the front floor. Operation A1-4.
2. Remove the seat base. Operation C1-1.
3. Drain the gearbox lubricating oil. Operation C1-2.
4. Remove the gearbox assembly complete. Operation C1-3.
5. Remove the transmission brake. Operation C1-4.
6. Remove the transfer box. Operation C1-7.
7. Remove the main gear change lever. Operation C1-11.
8. Remove the clutch withdrawal unit. Operation C1-14.
9. Remove the bell housing. Operation C1-16.
10. Remove the selector shafts. Operation C1-18.
11. Remove the layshaft. Operation C1-20.
12. Remove the mainshaft. Operation C1-22.

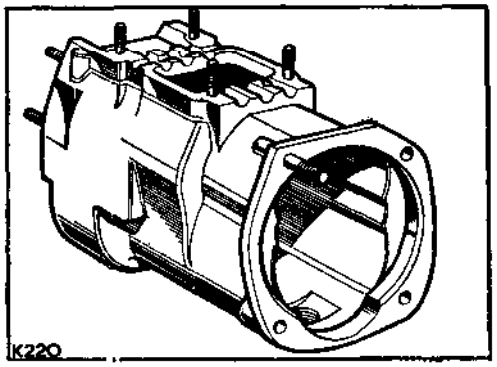


**Fig. C1-179. Gearbox main casing**

Upon completing the foregoing operations, the gearbox main casing is automatically released and can be dismantled as described under 'overhaul', Operation C1-25.

### To refit

Reverse the removal procedure.

Replenish the gearbox lubricating oil. Operation C1-2.

Adjust the four wheel drive control lever. Operation A1-4.

## Gearbox main casing and reverse gear, overhaul—Operation C1-25

*(For removal and refitting instructions, Operation C1-24 refers)*

Workshop hand tools:
Circlip pliers, Mallet

### To dismantle

1. Prise the oil seal from the rear of the mainshaft bearing housing.
2. Remove the circlip retaining the bearing housing to the rear face of the gearbox.

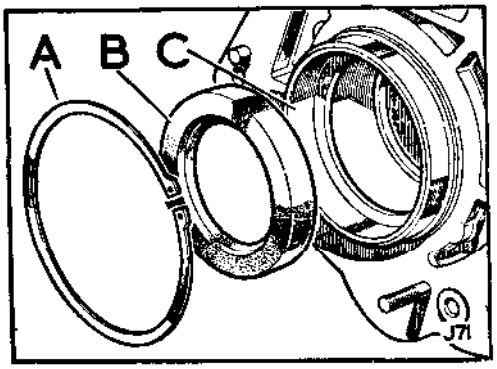


**Fig. C1-180. Mainshaft rear oil seal**

A—Circlip, retaining housing
B—Oil seal
C—Housing, mainshaft bearing and oil seal

3. Press out the housing, complete with bearing, in a forward direction.
4. Remove the circlip and press the mainshaft rear bearing from the housing.

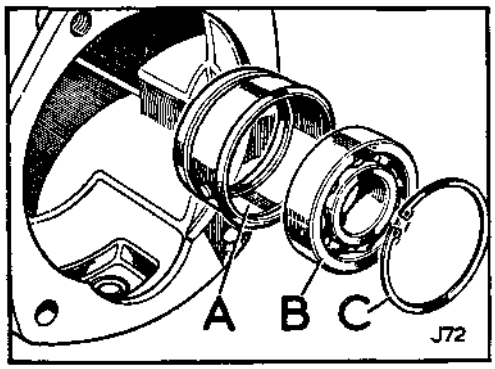


**Fig. C1-181. Mainshaft rear bearing**

A—Housing, rear bearing
B—Bearing
C—Circlip, retaining bearing

5. Warm the gearbox case and drive out the reverse gear shaft from inside the case. Lift out the reverse wheel assembly.

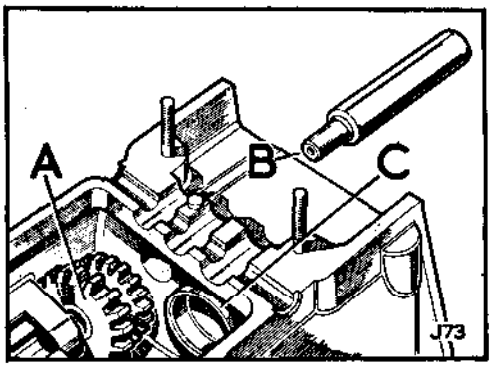


**Fig. C1-182. Reverse gear and layshaft bearing**

A—Reverse wheel assembly
B—Shaft, reverse wheels
C—Outer race, layshaft rear bearing

6. Warm the gearbox case, and tap the rear face with a mallet to free the layshaft bearing outer race.

   **Note:** If any difficulty is experienced in removing the outer race, an alternative method is to use a mandrel, approximately 12 in. long (300 mm) by 1$\frac{11}{16}$ in. (43,50 mm) diameter, so that it is a tight fit in the outer race. Warm the gearbox case and outer race, keep the mandrel as cool as possible. With the casing warm, insert the mandrel into the outer race, which will shrink on to the mandrel, and withdraw easily.

7. The remaining oil drain and filler plugs, studs, dowels and retaining plate for selector shaft oil seals, can be removed as required.

### Inspection

1. Check all components for wear or damage.
2. Ensure that the two dowels in the gearbox top face, and the two dowels in the rear face, are secure.

## Operation C1-25—*continued*

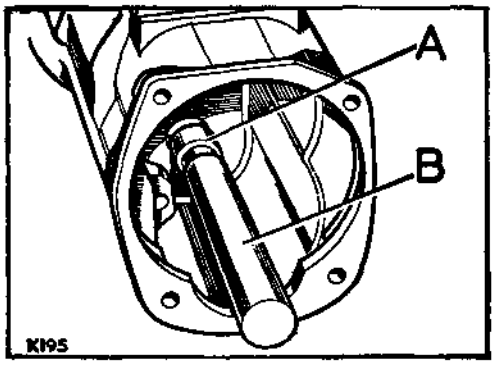


**Fig. C1-183. Alternative method of removing layshaft rear bearing outer race**

A—Bearing outer race B—Mandrel

3. Check the bush in the reverse wheel assembly. If a new bush is required it must be secured by peening after being pressed into position, and then reamed to .8125 in. +.001 in. (20,637 mm ± 0,025 mm) diameter.

Note that the latest type reverse gear assemblies incorporate lubrication oilways to prevent the possibility of reverse gear seizure, when reverse gear is engaged for prolonged periods.

Early gearboxes can be modified by fitting the latest type reverse gear, bush and shaft.

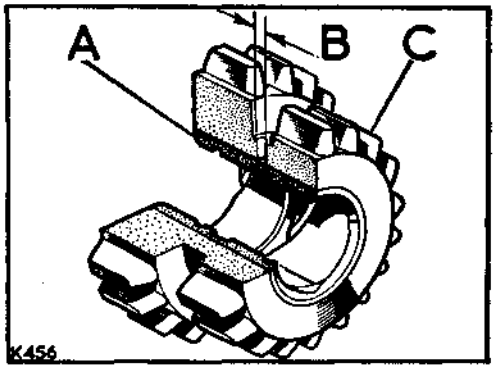


**Fig. C1-184. Drilling reverse gear bush**

A—Bush
B—.125 in. (3,18 mm) diameter hole
C—Reverse gear wheel

**Important:** When fitting the latest type bush to the latest type gear, after reaming and peening as already described, drill a .125 in. (3,18 mm) diameter hole through the bush, using the existing hole in the gear as a pilot. Afterwards remove all fraze from the bore.

**To assemble**

1. Press the layshaft rear bearing outer race, lipped edge first, into the gearbox case.

2. Fit the reverse wheel assembly, with the small gear to the rear of the gearbox, then press the reverse shaft, small end first, into position until it is flush with the rear face of the gearbox.

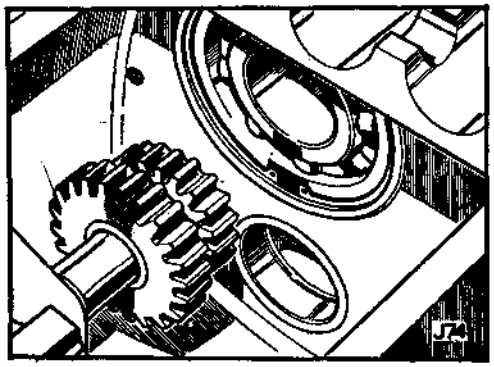

**Fig. C1-185. Reverse gear and rear bearings**

3. Press the mainshaft rear bearing into the housing and retain with a circlip.

4. Fit the mainshaft rear oil seal, lipped side first, into the bearing housing.

5. Check the bearing housing for method of location, see Fig. C1-181. Early type housings are peg located, latest type housings have a plain location and are retained with Loctite.

   Early type: Locate the mainshaft bearing housing inside the gearbox and press it into position, ensuring that the peg location between the bearing housing and gearbox case is aligned.

   Latest type: Smear the outside diameter of the bearing housing with Loctite Retaining Compound (Grade AAV), and press it into position.

   Note that the gearbox should not be filled with lubricating oil or used for twenty-four hours, to allow the Loctite to fully cure.

6. Fit the retaining circlip to the groove in the bearing housing where it protrudes through the rear face of the gearbox.

## Fault diagnosis—Gearbox

| Symptom | Possible cause | Investigation | Remedy |
|---|---|---|---|
| **Gearbox noisy in neutral** | Insufficient oil in gearbox | Check oil levels | Replenish |
| | Incorrect grade of lubricating oil | SAE 90 EP<br>See Section X | Drain and replenish with correct grade |
| | Primary pinion bearing worn | Remove bell housing and check bearing | Fit new bearing |
| | Constant mesh gears incorrectly matched or badly worn | Remove bell housing and check constant gears | Fit a new matched pair of gears |
| | Layshaft bearings worn | Remove bell housing and check layshaft front bearing | Fit new bearing |
| | | Remove layshaft and check rear bearing | Fit new bearing |
| **Gearbox noisy in gear** | Worn speedometer gear | Remove speedometer drive housing from gearbox and check worm and pinion | Fit new worm and pinion |
| **Gearbox noisy in all gears except top (4th)** | Constant gears worn or incorrectly matched, or layshaft bearings worn | Remove bell housing and check constant gears and layshaft bearings | Fit new matched pair of constant gears or layshaft bearings as required |
| **Gearbox noisy in one particular gear only** | Worn or damaged gears | Dismantle gearbox and check gears | Fit new gears as necessary |
| **Gearbox noisy in all gears** | Worn primary pinion or mainshaft bearings | Remove bell housing and check primary pinion and bearing | Fit new matched pair of constant gears and/or primary pinion bearing as required |
| | | Dismantle gearbox and check mainshaft bearings and gear teeth | Fit new bearings and/or gears as required |
| **Oil leaks from gearbox** | Gearbox over-filled with lubricating oil | Remove level plugs | Rectify oil level with vehicle standing on level floor |
| | Loose or damaged drain or level plugs | Check drain and level plugs. Ensure that joint washer for drain plug is in place and is in good condition | Tighten plugs. If damaged, fit new plugs and joint washer as required |
| | Joint washers damaged, incorrectly fitted or missing | Determine point of leak, see exploded views in Section C for location of joint washers, and dismantle as necessary | Fit new joint washer with general purpose grease smeared on both sides |
| | Oil seals damaged or incorrectly fitted | Determine point of leak, see exploded views in Section C for location of oil seals, and dismantle as necessary | Fit new oil seal with 'Hylomar' SQ32M sealing compound smeared on the outside diameter |
| | Cracked or broken gearbox casings | Clean and examine casings | Fit new casings |
| **Difficulty in engaging forward gears** | Incorrect adjustment of gear change mechanism | Check adjustments, Operation C1-13 and C1-18 | Adjust as necessary |
| | Clutch spinning or dragging | Check clutch adjustment. See Section B | Adjust as necessary |
| | Clutch plate sticking on the pinion shaft | Remove gearbox and clutch, check splines on clutch plate and pinion shaft | Fit new clutch plate and/or new matched pair of constant gears |

## Fault diagnosis—Gearbox—*continued*

| Symptom | Possible cause | Investigation | Remedy |
|---|---|---|---|
| **Difficulty in engaging reverse gear** | Incorrect adjustment of selector stops | Check adjustments, Operation C1-13 and C1-18 | Adjust as necessary |
| | Bush loose in gear | Remove reverse gear | Fit latest type reverse gear and shaft, see Operation C1-25 |
| | Reverse gear seized on shaft | Remove reverse gear | |
| **Difficulty in disengaging forward gears** | Synchromesh unit faulty | Remove bell housing and check synchromesh unit | Fit new springs or synchromesh unit complete |
| | Distorted or damaged mainshaft splines | Remove mainshaft and check splines | Fit new mainshaft |
| **Difficulty in disengaging reverse gear** | Reverse gear seized on shaft | Remove reverse gear | Fit latest type reverse gear and shaft, see Operation C1-25 |
| **Gear lever going into reverse too easily and not into first** | Incorrect adjustment of reverse stop | Check adjustment, Operation C1-13 | Adjust as necessary |
| **Transfer of oil between gearbox and transfer gear** | Worn oil seal in gearbox | Remove the transfer box, mainshaft transfer gear and oil thrower, and check oil seal in gearbox | Fit new oil seal with 'Hylomar' SQ32M sealing compound smeared on the outside diameter |
| **Transfer of oil between gearbox and clutch** | Worn oil seal or damaged joint washer in clutch withdrawal unit | Remove clutch withdrawal unit and check joint washer and cross-shaft oil seal | Fit new joint washer and oil seal with 'Hylomar' SQ32M sealing compound smeared on the outside diameter |
| **Jumping out of high transfer** | Incorrectly fitted rubber boot at transfer gear lever | Check that rubber boot is not tensioned when in high transfer | Reposition rubber boot |
| | Weak or broken selector spring | Remove plug and spring from top of transfer box and check spring | Fit new spring |
| **Jumping out of low transfer** | Incorrectly fitted rubber boot at transfer gear lever | Check that rubber boot is not tensioned when in low transfer | Reposition rubber boot |
| | Weak or broken selector spring | Remove plug and spring from top of transfer box and check spring | Fit new spring |
| | Excessive end-float of intermediate gear | Remove the bottom cover plate from the transfer box and check intermediate gear end-float: .004 in. to .008 in. (0,10 mm to 0,20 mm) | Adjust as required, Operation C1-8. |
| | Transfer selector fork incorrectly assembled | Remove the top cover from the transfer box and check that fork has threaded side of pinch bolt hole towards centre of box | Remove front output shaft housing and refit fork correctly |
| **Transfer box noisy** | Insufficient oil in transfer box | Check oil level | Replenish |
| | Incorrect grade of lubricating oil | SAE 90 EP<br>See Section X | Drain and replenish with correct grade |
| | Excessive end-float of intermediate gear | Remove the bottom cover plate from the transfer box and check intermediate gear end-float: .004 in. to .008 in. (0,10 mm to 0,20 mm) | Adjust as required, Operation C1-8 |

## Fault diagnosis—Gearbox—*continued*

| Symptom | Possible cause | Investigation | Remedy |
|---|---|---|---|
| | End float of output shaft | Disconnect both propeller shafts from gearbox and check output shaft for end-float | Remove all end-float by setting the output shaft bearing pre-load, Operation C1-8 |
| | Worn bearings | Remove transfer box and dismantle | Fit new bearings |
| **Cannot engage four-wheel drive** | Locking pin seized in casing | Remove floor panel and check operation of selector rod, lever and locking pin | Rectify or fit new locking pin |
| | Broken selector shaft spring | Remove and dismantle front output shaft housing | Clean and fit new parts as required |
| | Selector shafts sticking in bores of casing | | |
| **Cannot disengage four-wheel drive** | Spring for selector rod broken, missing or incorrectly adjusted | Check spring at selector rod (yellow knob) | Fit new spring and/or adjust, Operation A1-4 |
| | Broken selector shaft spring | Remove and dismantle front output shaft housing | Clean and fit new parts as required |
| | Selector shafts sticking in bores | | |
| | Incorrect or excessively worn tyres, varying particularly between front and rear | Check tyres for type and condition | Tyres of same type and similar condition must be fitted to all four wheels |

## General Data

**Main gearbox**

| | |
|---|---|
| Type | Four speed and reverse |
| Oil capacity | 2½ pints (1,5 litres) |
| Early models: | |
| Dipstick position | LH rear of casing |
| Late models: | |
| Oil level plug | LH side of casing |

| **Gear ratios:** | Up to gearbox suffix 'B' | From gearbox suffix 'C' onward |
|---|---|---|
| Top | 1:1 | 1:1 |
| Third | 1.377:1 | 1.50:1 |
| Second | 2.043:1 | 2.22:1 |
| First | 2.996:1 | 3.60:1 |
| Reverse | 2.547:1 | 3.02:1 |

**Transfer gearbox:**

| | |
|---|---|
| Type | Two-speed gear in main gearbox output, in unit with main gearbox |
| Oil capacity | 4½ pints (2,5 litres) |

| **Gear ratios:** | Up to gearbox suffix 'B' | From gearbox suffix 'C' onward |
|---|---|---|
| High | 1.148:1 | 1.148:1 |
| Low | 2.888:1 | 2.350:1 |

**Overall gear ratios:** Up to gearbox suffix 'B'

| Main gearbox | Transfer box | |
|---|---|---|
| | High ratio | Low ratio |
| Top gear | 5.396 | 13.578 |
| Third gear | 7.435 | 18.707 |
| Second gear | 11.026 | 27.742 |
| First gear | 16.171 | 40.688 |
| Reverse gear | 13.745 | 34.585 |

**Overall gear ratios:** From gearbox suffix 'C' onward

| Main gearbox | Transfer box | |
|---|---|---|
| | High ratio | Low ratio |
| Top gear | 5.396 | 13.578 |
| Third gear | 7.435 | 18.707 |
| Second gear | 11.026 | 27.742 |
| First gear | 16.171 | 40.688 |
| Reverse gear | 13.745 | 34.585 |

**Overall gear ratios:** With special all helical transfer box

Fitted as standard equipment on 109, 1 ton model, optional on others

| Main gearbox | Transfer box | |
|---|---|---|
| | High ratio | Low ratio |
| Top gear | 7.19:1 | 15.4:1 |
| Third gear | 10.8:1 | 23.1:1 |
| Second gear | 15.96:1 | 34.1:1 |
| First gear | 25.9:1 | 55.3:1 |
| Reverse gear | 21.7:1 | 46.4:1 |

**Front axle drive:**

| | |
|---|---|
| Type | Dog clutch in transfer box |
| To engage | Depress yellow knob on gearbox cover |
| To disengage | Automatic by selecting low transfer, then reverting to high transfer. Automatically engaged on selection of low transfer |

## General Data—*continued*

**Speedometer drive:**

| | |
|---|---|
| Ratio | 2.2:1 |
| Position | At rear of transfer box |

**Transmission brake:**

| | |
|---|---|
| Type | Mechanical. (See Section H). On transfer box output shaft |

## Detail Data

**Main gearbox**

| | |
|---|---|
| Reverse gear bush: | |
| Reamed bore | .8125 in. + .001 in. (20,637 mm + 0,0254 mm) |
| Mainshaft bush: | |
| Fit in gears | .0025 in. to .0035 in. (0,0635 mm to 0,0889 mm) |
| Fit on shaft | Zero to .001 in. (Zero to 0,0254 mm) |
| End-float | .001 in. to .008 in. (0,0254 mm to 0,20 mm) |
| 2nd and 3rd speed gears: | |
| End-float on distance sleeve | .004 in. to .007 in. (0,10 mm to 0,18 mm) |
| Synchronising clutch-load | 15 lb. to 20 lb (6,5 kg to 9 kg) |
| 2nd gear stop: | |
| Adjustment | .002 in. (0,05 mm) clearance |
| Reverse gear stop: | |
| Adjustment | .002 in. (0,05 mm) clearance |

**Transfer gearbox:**

| | |
|---|---|
| Dog clutch selector shaft bush: | |
| Reamed bore | 1.148 in. —.001 in. (29,17 mm —0,025 mm) |
| Output shaft front and rear bearings: | |
| End-float | Zero |
| Pre-load | 2 lb to 4 lb (0,28 kg to 0,55 kg) |
| High-speed gear: | |
| End-float | .004 in. to .008 in. (0,10 mm to 0,20 mm) (after adjusting output shaft end-float) |
| Intermediate gear: | |
| End float | .004 in. to .008 in. (0,10 mm to 0,20 mm) |

**All helical transfer box,** as above with the following exceptions:

| | |
|---|---|
| Low speed gear: | |
| End-float | .002 in. to .009 in. (0,05 mm to 0,23 mm) |
| High-speed gear: | |
| End-float | .005 in. to .022 in. (0,12 mm to 0,57 mm) |

**Front output shaft housing assembly**

| | |
|---|---|
| Transfer selector shaft, spring: | |
| Free length | 7.156 in. (181,76 mm) |
| Length in position | 3.875 in. (98,43 mm) |
| Load in position | 24 lb (10,89 kg) |
| Dog clutch selector springs: | |
| Free length | 2.75 in. (69,8 mm) |
| Solid length | .64 in. (16,2 mm) |
| Maximum load | 13 lb (5,9 kg) |

# SECTION D—PROPELLER SHAFTS

# INDEX—PROPELLER SHAFTS

**Note:** A comprehensive, detailed index is included at the end of this manual


| Description | Operation No. |
|---|---|
| Exploded view and description | At beginning of section |
| **FRONT PROPELLER SHAFT** | 2–3 |
| Lubrication | 1 |
| Sliding joint | 3 |
| Universal joints | 3 |
| **REAR PROPELLER SHAFT** | 2–3 |
| Lubrication | 1 |
| Sliding joint | 3 |
| Universal joints | 3 |
| **FAULT DIAGNOSIS** | At end of section |
| **DATA** | |

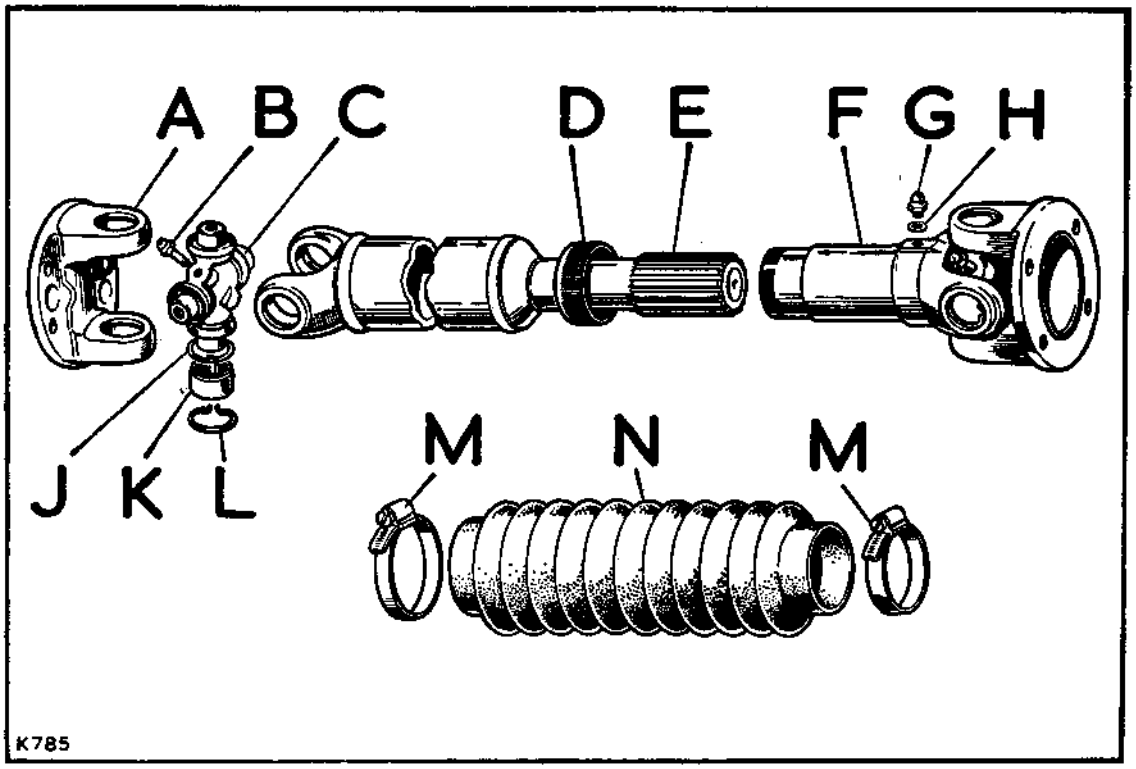


**Fig. D1-1. Exploded view of propeller shaft**

A—Flanged yoke
B—Grease nipple for universal joint
C—Journal for bearings
D—Dust cap
E—Splined shaft
F—Splined sleeve
G—Grease nipple for splined joint
H—Washer for nipple
J—Seal for journal bearing
K—Needle roller bearing assembly
L—Circlip retaining bearing
M—Clips fixing rubber grommet
N—Rubber grommet for sliding joint

## Lubrication, propeller shafts (front and rear axle drives)—Operation D1-1

Workshop hand tools:
Grease gun

### Universal joints

1. Using the correct grade of grease, see Section X, apply grease at the lubrication nipples fitted to the universal joints at both ends of the propeller shaft.

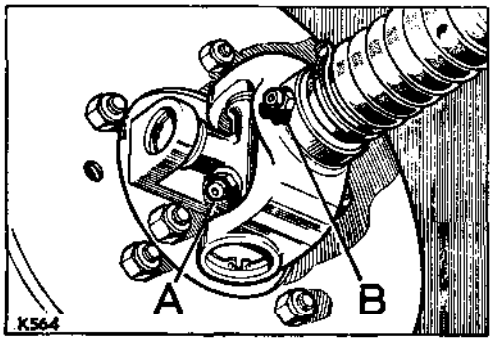


**Fig. D1-2. Lubricating points for propeller shafts**

A—Nipple for universal joint
B—Nipple for sliding joint

### Sliding joints

1. Using the correct grade of grease, apply grease at the lubrication nipple fitted to the splined sleeve.

**Note:** If the propeller shaft is fitted with a plug at the sliding joint lubrication point, replace the plug with a lubrication nipple.

**Important:** If the propeller shafts are lubricated while they are removed from the vehicle, compress the sliding joint to avoid overfilling, then apply grease.

## Propeller shafts (front and rear axle drives), remove and refit—Operation D1-2

*(For overhaul instructions, Operation D1-3 refers)*

Workshop hand tools:
Spanner sizes: $\frac{9}{16}$ in. AF open end and ring

### To remove

1. Jack up the front or rear of the vehicle as applicable, until the wheels are just clear of the floor.
2. Disconnect the propeller shaft from the final drive unit.
3. Disconnect the propeller shaft from the transfer box or front output shaft housing, as applicable.
4. Withdraw the propeller shaft from under the vehicle.

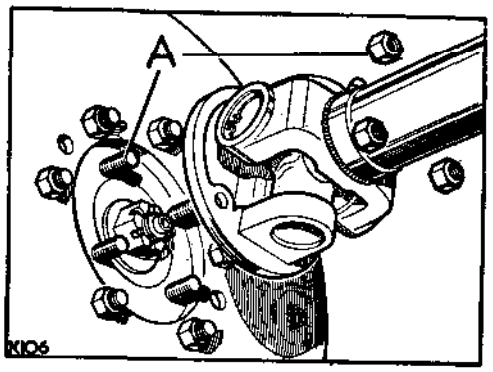


**Fig. D1-3. Propeller shaft location (Coupling at gearbox rear output flange illustrated)**

A—Fixings at coupling flanges

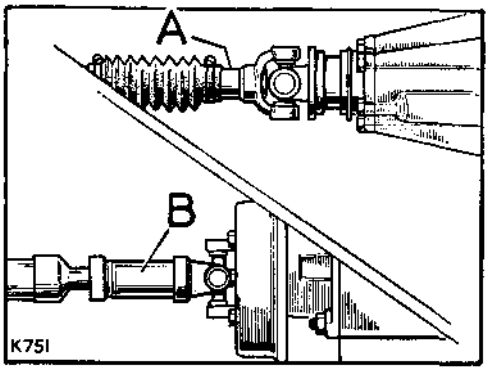


**Fig. D1-4. Propeller shaft location**

A—Sleeve end of front propeller shaft
B—Sleeve end of rear propeller shaft

### To refit

**Note:** The front propeller shaft should be fitted with the sleeve end (short end) towards the front axle. The rear propeller shaft should be fitted with the sleeve end towards the gearbox.

1. Locate the propeller shaft in position. Ensure that the registers on the coupling flanges engage, and that the joint faces bed down correctly all round.
2. Secure the propeller shaft to the gearbox output flange. Tighten the nuts evenly.
3. Secure the propeller shaft to the final drive input flange, with the nuts behind the input flange. Tighten the nuts evenly.
4. Lower the vehicle to the floor.

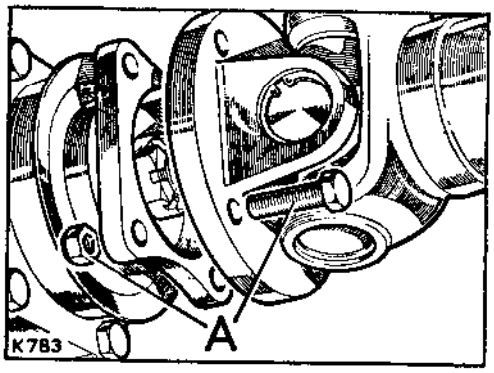


**Fig. D1-5. Propeller shaft coupling to final drive unit**

A—Fixings at coupling flanges

## Propeller shafts (front and rear axle drives), overhaul—Operation D1-3

*(For removal and refitting instructions, Operation D1-2 refers)*

Workshop hand tools:
Screwdriver, circlip pliers, mallet, brass drift, dial test indicator

### To dismantle

1. If fitted, unscrew the two hose clips and slide the rubber grommet up the shaft.

   **Important:** Before dismantling the propeller shaft, ensure that the alignment marks on the splined sleeve and splined shaft are clearly visible. If necessary, make new alignment marks, as the propeller shaft must be re-assembled in its original location, to maintain the balanced setting.

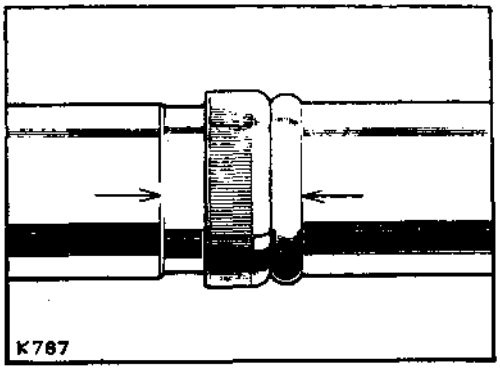


**Fig. D1-6. Alignment marks between splined sleeve and shaft**

2. Unscrew the dust cap and withdraw the sliding joint from the splined shaft.

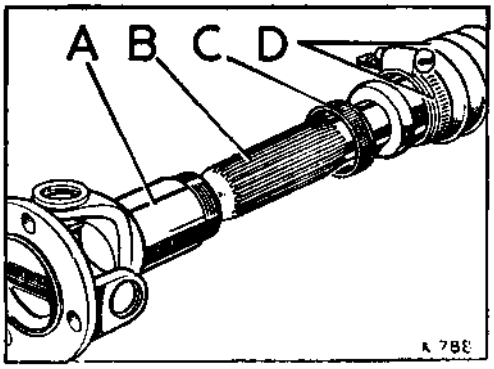


**Fig. D1-7. Sliding joint for propeller shaft**

A—Splined sleeve
B—Splined shaft
C—Dust cap
D—Rubber grommet and clips

Dismantle each universal joint as follows:

3. Clean the enamel and dirt from the four circlips and the tops of the bearing races.
4. Remove the circlips.

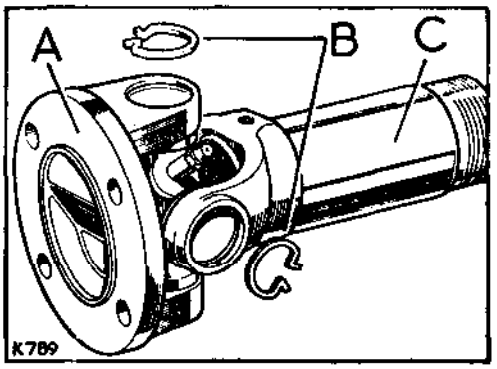


**Fig. D1-8. Universal joint**

A—Flange yoke
B—Circlips
C—Shaft yoke

5. Hold the joint with one of the splined sleeve (or shaft) yoke lugs uppermost and tap the radius of the yoke lightly with a soft-nosed hammer. The top bearing should then begin to emerge from the yoke.

   **Note:** If necessary, remove the grease nipple from universal joint to facilitate bearing removal.

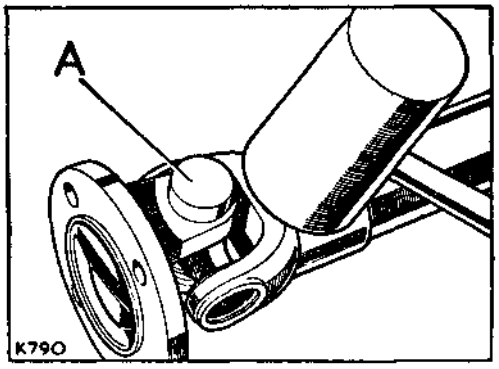


**Fig. D1-9. First stage of yoke bearing removal**

A—Bearing emerging

## Operation D1-3—*continued*

6. Turn the joint over and withdraw the bearing. Always remove a bearing downwards, to avoid dropping the needle rollers. It may be necessary to tap the bearing race from the inside with a small drift; in such cases, care should be taken to prevent damage to the bearing race.

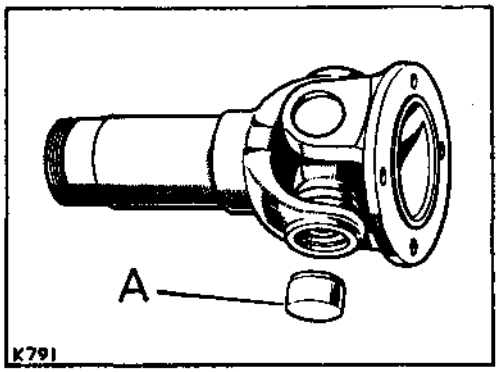


**Fig. D1-10. Second stage of yoke bearing removal**

**A—Bearing withdrawn**

7. Repeat the foregoing operations for the opposite bearing.
8. The splined sleeve (or shaft) yoke can now be removed.

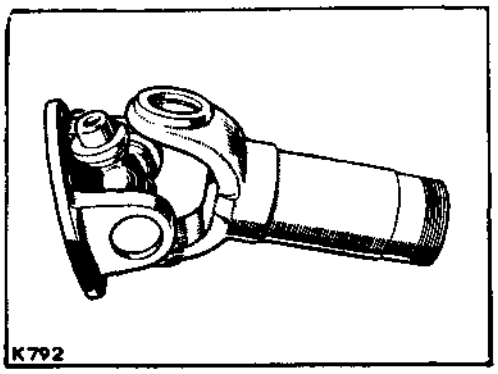


**Fig. D1-11. Removing the splined sleeve or shaft**

9. Rest the flange yoke on a short piece of tubing of suitable diameter (slightly larger than the bearing race) and drive out the two remaining bearings, using a brass drift.

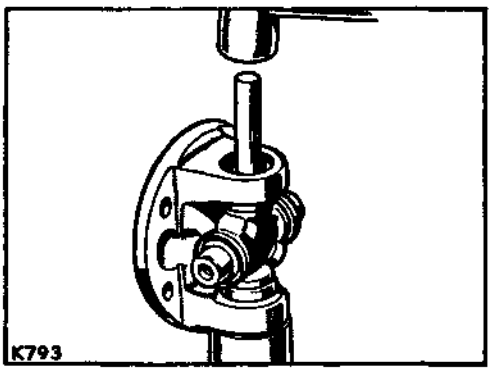


**Fig. D1-12. Removing the flange yoke**

### Inspection

1. Examine all components for obvious wear or damage.
2. If the journal or bearings for the universal joint show any signs of wear, load markings or distortion, they must be renewed complete. Replacement journal assemblies comprise a spider complete with oil seals and four bearings.
3. In the event of wear taking place in any of the eight yoke cross holes, rendering them oval, a new propeller shaft complete must be fitted.
4. Temporarily assemble the splined sleeve and shaft with the alignment marks located directly opposite. Then using a dial test indicator, located on the outside diameter of the shaft splines, check the circumferential movement between the sleeve and shaft. The maximum permissible movement is .004 in. (1,0 mm), if wear beyond this limit has taken place, a new propeller shaft complete must be fitted.

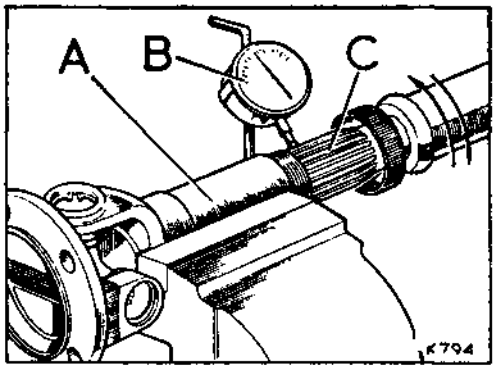


**Fig. D1-13. Checking circumferential movement**

**A—Splined sleeve**
**B—Dial test indicator**
**C—Splined shaft**

## Operation D1-3—*continued*

### To assemble

1. Assemble the needle rollers in the bearing races, if necessary using a smear of vaseline to retain them in place. About half fill the races with a recommended grease.
2. Insert the journal in the flange yoke holes and, using a brass drift slightly smaller in diameter than the hole in the yoke, lightly tap the first bearing into position, and retain with a circlip. It is essential that the bearing races be a *light drive fit* in the yoke trunnions.

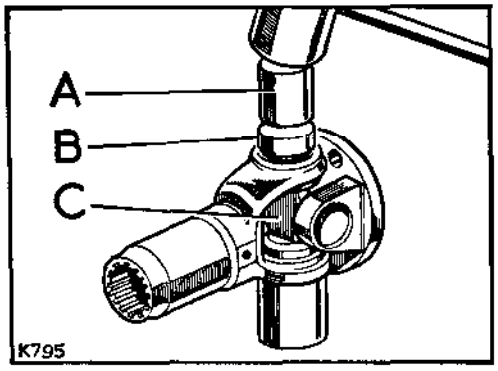


**Fig. D1-14. Replacing a yoke bearing**

A—Drift
B—Yoke bearing
C—Journal

3. Repeat the foregoing operations for the other three bearings comprising the universal joint.
4. Ensure that all four circlips are firmly located in their grooves. If the joint appears to bind, tap the yoke ears lightly with a soft mallet.
5. Where applicable, slide the rubber grommet and hose clips on to the shaft.
6. Liberally smear the splines of the shaft and sleeve with grease and assemble the propeller shaft, ensuring that the alignment marks on the shaft and sleeve are in line.

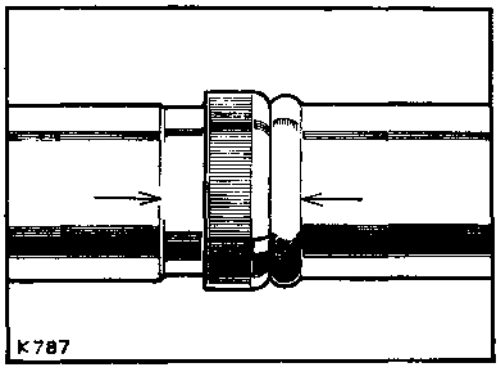


**Fig. D1-15. Alignment marks between splined sleeve and shaft**

7. If applicable, place rubber grommet in position and secure hose clips 180° to each other to maintain balance.

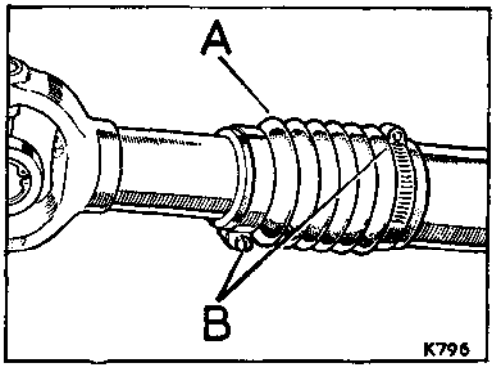


**Fig. D1-16. Rubber grommet in position on shaft**

A—Rubber grommet
B—Hose clips at 180° to each other

8. Lubricate the propeller shaft. Operation D1-1.

## Fault diagnosis—Propeller shafts

| Symptom | Possible cause | Investigation | Remedy |
|---|---|---|---|
| **Vibrating propeller shaft** | Fixings loose | Check fixings at gearbox and differential coupling flanges | Tighten the fixings evenly and securely |
| | Incorrectly assembled propeller shaft | Check alignment of balance marks | Reassemble propeller shaft correctly aligned |
| | Worn needle roller bearings | Check bearings at both universal joints | Fit new bearings |
| | Worn splines | Remove propeller shaft and check splines with dial test indicator, Operation D1-3 | Fit new propeller shaft complete |
| | Shaft out of balance | If the foregoing checks fail to produce a remedy | Fit new propeller shaft complete |
| **Noisy universal joints** | Lack of lubrication | | Lubricate propeller shaft, Operation D1-1 |
| | Fixing loose | Check fixings at gearbox and final drive coupling flanges | Tighten the fixings evenly and securely |
| | Worn needle roller bearings | Check bearings at both universal joints | Fit new bearings |
| | Worn splines | Remove propeller shaft and check splines with dial test indicator, Operation D1-3 | Fit new propeller shaft complete |

## GENERAL DATA

**88 in.**

| | |
|---|---|
| Type | Hardy Spicer needle bearing |
| Tubular shaft: | |
| Diameter | 2 in. (50,8 mm) |
| Wall thickness | $\frac{3}{32}$ in. (2,4 mm) |
| Overall length (face to face in neutral position): | |
| Front axle drive | 23.812 in. (654 mm) |
| Rear axle drive | 21.812 in. (554 mm) |
| Lubricant | Grease |

**109 in. 2¼ litre engine**

| | |
|---|---|
| Type | Hardy Spicer needle bearing |
| Tubular shaft: | |
| Diameter | 2 in. (50,8 mm) |
| Wall thickness | $\frac{3}{32}$ in. (2,4 mm) |
| Overall length (face to face in neutral position): | |
| Front axle drive | 23.812 in. (654 mm) |
| Rear axle drive | 42.812 in. (1,087 mm) |
| Lubricant | Grease |

**109 in. 2.6 litre engine**

| | |
|---|---|
| Type | Hardy Spicer needle bearing |
| Tubular shaft: | |
| Diameter | 2 in. (50,8 mm) |
| Wall thickness | $\frac{3}{32}$ in. (2,4 mm) |
| Overall length (face to face in neutral position): | |
| Front axle drive | 27.312 in. (694 mm) |
| Rear axle drive | 39.312 in. (999 mm) |
| Lubricant | Grease |

# SECTION E—REAR AXLE AND SUSPENSION

## IMPORTANT

There are two entirely different types of differential in use. The majority of vehicles are fitted with Rover type units, but certain vehicles, including the One Ton Land-Rover and other models built to special order or specification, are fitted with units of ENV manufacture, this usually applies to the rear axle only.

When carrying out any work or ordering parts for differentials, care must be taken to correctly identify the type of unit concerned.

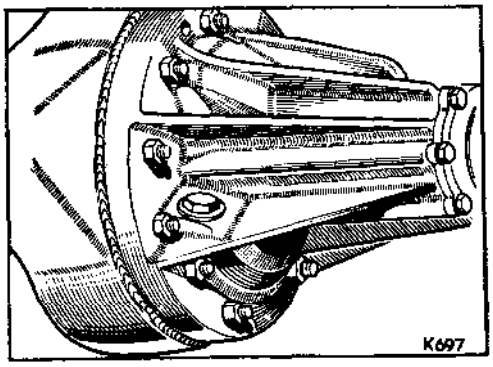


**Fig. E1-1. Rover type differential**

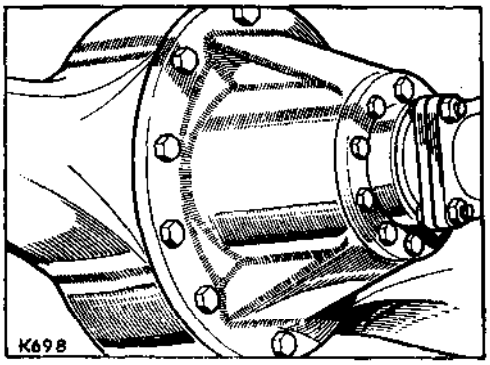


**Fig. E1-2. ENV type differential**

# INDEX—REAR AXLE AND SUSPENSION

**Note:** A comprehensive, detailed index is included at the end of this manual


| Description | Operation No. |
|---|---|
| Exploded views and description | At beginning of section |
| **WHEEL HUBS** | |
| Bearing adjustment | 4 |
| Bearing sleeve (stub axle) | 5–6 |
| Brake anchor plate | 5 |
| Driving member for hub | 2–3–3A |
| Hub and bearings | 5–6 |
| Lubrication | 1 |
| Oil seal for driving member | 3–3A |
| Oil seal for hub bearings | 6 |
| **REAR SUSPENSION** | |
| Bump stop rubber | 11 |
| Check straps for axle | 8 |
| Road springs | 9–10 |
| Shackle pins and bushes | 9–10 |
| Shock absorbers | 7 |
| **DIFFERENTIAL** | |
| Crown wheel and pinion | 14–14A |
| Differential | 14–14A |
| Lubrication | 1–1A |
| Oil seal for bevel pinion case | 12–12A |
| **REAR AXLE** | |
| Axle assembly | 16 |
| Axle case | 15 |
| Breather for axle case | 15 |
| Check strap for axle | 8 |
| Half shafts | 2–3–3A |
| Lubrication | 1 |
| Oil seal for half shaft | 3–3A |
| **FAULT DIAGNOSIS** | At end of section |
| **DATA** | At end of section |

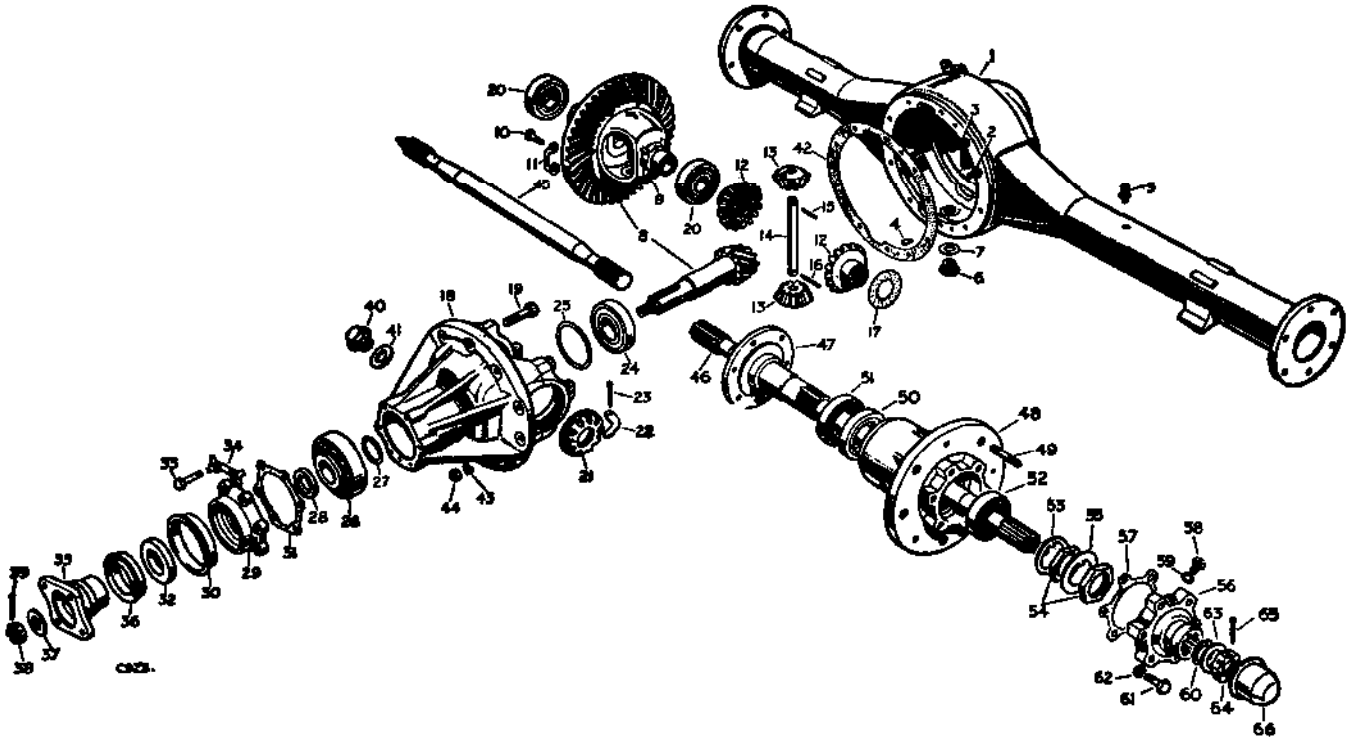

**Fig. E1-3. Layout of rear axle**

1 Rear axle casing
2–3 Bolts fixing differential
4 Dowel locating differential
5 Breather
6–7 Oil drain plug
8 Crownwheel and bevel pinion
9 Differential casing
10–11 Fixings for crownwheel
12 Differential wheel
13 Differential pinion
14 Spindle for pinions
15–16 Fixings for spindle
17 Thrust washer for differential
18 Bevel pinion housing
19 Bolt fixing bearing cap
20 Roller bearings for differential
21 Serrated nut
22 Lock tab } For bearing adjustment
23 Split pin
24 Bearing for bevel pinion, pinion end
25 Shims for bearing adjustment, pinion end
26 Bearing for bevel pinion, flange end
27 Shims for bearing adjustment, flange end
28 Washer for bearing
29 Retainer for oil seal
30 Mudshield for retainer
31 Joint washer for retainer
32 Oil seal for pinion
33–34 Fixings for retainer
35 Driving flange
36 Dust shield for driving flange
37–39 Fixings for driving flange
40–41 Oil filler plug and washer
42 Joint washer for differential
43–44 Fixings for differential
45 Axle shaft, RH
46 Axle shaft, LH
47 Rear hub bearing sleeve
48 Rear hub assembly
49 Stud for road wheel
50 Hub bearing, inner
51 Oil seal for inner bearing
52 Hub bearing, outer
53–55 Fixings—for hub bearing
56 Driving member for rear hub
57 Joint washer for driving member
58 Filler plug for hub driving member
59 Joint washer for filler plug
60 Oil seal for rear axle shaft
61–62 Fixings—driving member to rear hub
63–65 Fixings—axle shaft to driving member
66 Hub cap, rear

## Lubrication, rear axle (differential and hubs)—Operation E1-1

*(Vehicles fitted with ENV differential, Operation* E1-1A *refers)*

Workshop hand tools:
Spanner sizes: ¾ in. AF open end

### Final drive unit

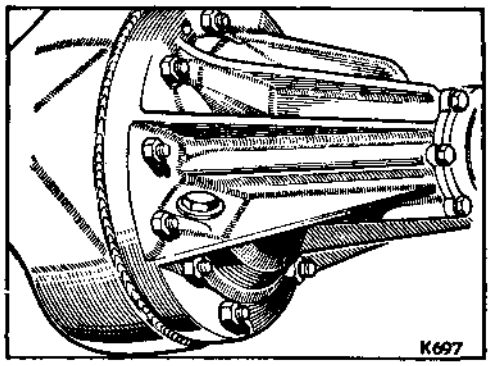


**Fig. E1-4. Rover type differential**

### To drain

1. Place a suitable container beneath the differential.
2. Remove the drain plug and allow all oil to drain, then replace the plug complete with joint washer.

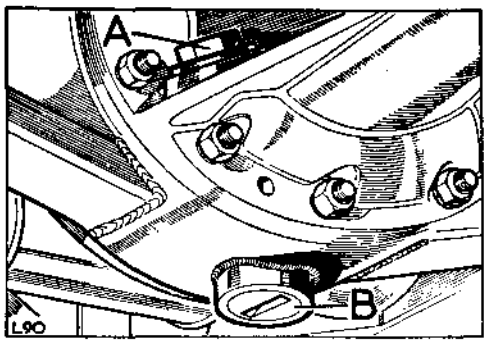


**Fig. E1-5. Oil filler and drain plugs**

A—Oil filler/level plug
B—Oil drain plug

### To refill or top-up

1. Remove the oil filler/level plug.
2. Using the correct grade oil, see Section X, fill the final drive unit to the bottom of the filler plug hole.
3. Fit the oil filler/level plug complete with joint washer.

**Capacity:** 3 Imperial pints, 3½ US pints, 1.75 litres.

### Hubs

**Note:** There are two lubricating mediums in use, early hubs are oil filled, while later hubs are grease packed. The grease packed hubs provide an additional means of preventing oil leakage from the final drive unit, and it is recommended that the earlier, oil filled hubs are changed to grease lubrication, this can most conveniently be done during overhaul when the hubs are dismantled and all components are clean and free from oil.

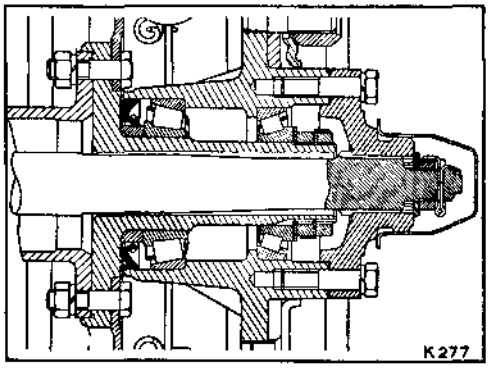


**Fig. E1-6. Cross-section of hub**

Where oil leakage is experienced on vehicles fitted with the earlier type hub, it is necessary to take the following action to grease-pack the hub.

1. Remove hub from vehicle, discard oil seal and thoroughly clean all parts.
2. Check bearings for wear and replace as required.
3. Pack both bearings with grease; also load area between bearings, leaving sufficient space for the bearing sleeve.
4. Fit new oil seal.
5. Assemble hub, at the same time applying grease between hub and hub driving member.
6. Check the end-float of the hub. Operation E1-4.
7. Do not attempt to fill hub by inserting grease through the oil filler plug in the hub driving member as there is a danger of over-filling and thereby forcing oil out through the oil seal and so on to the brake shoes.

**Note:** Lubrication instructions for grease filled hubs are similar to the foregoing, and are included in the operation dealing with hub overhaul.

## Lubrication, ENV differential—Operation E1-1A

*(For instructions covering lubrication of wheel hubs, Operation* E1-1 *refers)*

Workshop hand tools:
Spanner sizes: $\frac{9}{16}$ in. AF open end

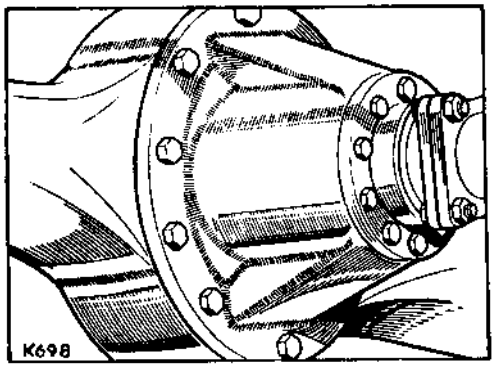


**Fig. E1-7. ENV type differential**

**To drain**

1. Place a suitable container beneath the differential.
2. Remove the drain plug and allow all oil to drain, then replace the plug complete with joint washer.

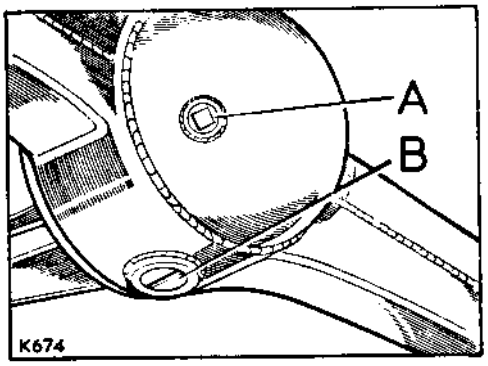


**Fig. E1-8. Oil filler and drain plugs**

A—Oil filler/level plug
B—Oil drain plug

**To fill or top up**

1. Remove the oil filler/level plug.
2. Using the correct grade oil, see Section X, fill the differential to the bottom of the filler plug hole.
3. Fit the oil filler/level plug complete with joint washer.

**Capacity:** $2\frac{5}{8}$ Imperial pints, 3.1 US pints, 1,4 litres.

## Rear axle half shafts, remove and refit—Operation E1-2

*(For overhaul instructions, Operation* E1-3 *refers)*
*(For removal, refitting and overhaul instructions of ENV type half shafts, Operation* E1-3A *refers)*

Workshop hand tools:
Spanner sizes: $\frac{3}{8}$ in. BSF socket

### To remove

1. Remove the driving member fixings and withdraw the axle half shaft. Note that the driving member is spigotted into the hub and may be initially tight.

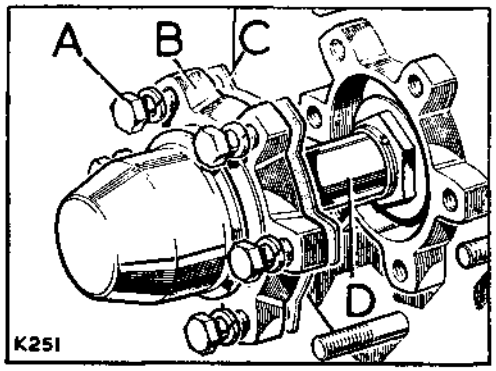


**Fig. E1-9. Rear axle half shaft**

A—Fixings, driving member
B—Driving member
C—Joint washer
D—Axle half shaft

### To refit

1. Smear both sides of the joint washer with general purpose grease and place it in position on the hub.
2. If the hub is grease lubricated, see Operation E1-1 (E1-1A), ensure that the space in the end of the hub and driving member is packed with grease.
3. Fit the axle half shaft, carefully engaging the splines into the differential. Tighten the securing bolts to a torque figure of 28 lb ft (3,9 mkg).
4. Check, and if necessary, replenish the rear axle lubricating oil. Operation E1-1 (E1-1A).
5. If the hubs are oil lubricated and it is not convenient to change to grease, remove the socket head oil filler plug from the driving member, and top-up the hub with $\frac{1}{3}$ pint (0,190 litre) of oil of the same grade as that for the final drive unit, see Section X.

## Rear axle half shafts, overhaul—Operation E1-3

*(For removal and refitting Instructions, Operation* E1-2 *refers)*
*(For overhaul Instructions for ENV type half shafts, Operation* E1-3A *refers)*

**Workshop hand tools:**
**Spanner sizes: $\frac{7}{8}$ in. BSF open end**
**Pliers, Screwdriver (large)**

### To dismantle

1. Prise off the hub cap.
2. Remove the driving member.
3. Withdraw felt oil seal from driving member.

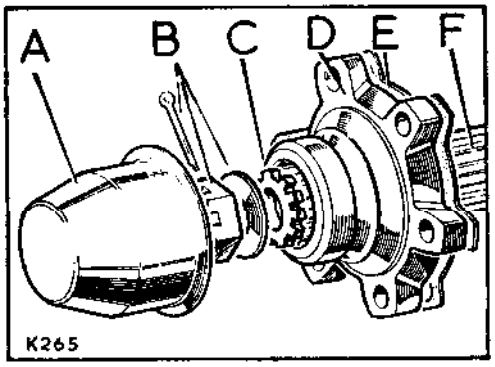


**Fig. E1-10. Rear axle half shaft**

A—Hub cap
B—Fixings, driving member to axle half shaft
C—Oil seal
D—Driving member
E—Joint washer
F—Axle half shafts

### Inspection

1. Examine all components for obvious wear or damage.

### To assemble

1. Fit the driving member to the half shaft, ensuring that the oil seal is fitted with the rubber side facing outward, see Fig. E1-11.
2. Tighten the driving member securing nut to a torque figure of 10 to 15 lb ft (1,4 to 2,0 mkg) and lock with a new split pin.

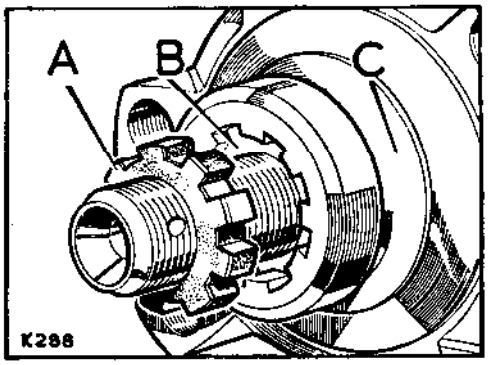


**Fig. E1-11. Oil seal for driving member**

A—Rubber face of seal
B—Axle half shaft
C—Driving member

3. Fit the hub cap, this must be a firm push fit.

## ENV Rear axle half shafts, to remove, refit and overhaul—Operation E1-3A

*(For removal and refitting instructions, Operation E1-2 refers)*

Workshop hand tools:
Spanner sizes: $\frac{7}{16}$ in. AF, $\frac{3}{8}$ in. BSF open end
Circlip pliers, Screwdriver (large)

### To dismantle

1. Slacken the fixings at the rear road wheel.
2. Jack up the rear of the vehicle.
3. Remove the rear road wheel.
4. Remove the brake drum, disconnect the brake pipe at the anchor plate and remove the fixings between the anchor plate and axle case, see Operation E1-5 items 3, 4, 7 and 8, then withdraw the hub and half shaft assembly complete from the axle.
5. Remove the driving member fixings.
6. Prise off the hub cap.
7. Remove the circlip from the outer end of the half shaft and withdraw the driving member and half shaft from the hub.

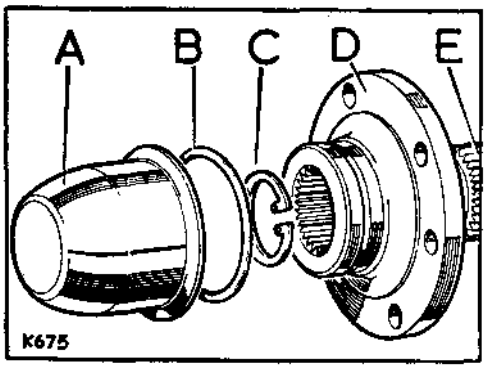


**Fig. E1-12. ENV rear axle half shaft**

A—Hub cap
B—Oil seal 'O' ring
C—Circlip
D—Driving member
E—Axle half shaft

**Note:** Early half shafts have a second circlip fitted behind the driving member, this can be removed as necessary.

### Inspection

1. Examine all components for obvious wear or damage.

### To assemble

1. Fit the driving member and axle half shaft to the hub.
2. Retain the half shaft and driving member assembly with a circlip, and secure the driving member to the hub.
3. Fit the oil seal 'O' ring and hub cap, this must be a firm push fit.
4. Complete the re-assembly by reversing the removal procedure, see Operation E1-5 items 1, 2, 3, 6 and 9. Bleed and adjust the brakes (Section H).
5. Check and, if necessary, replenish the rear axle lubricating oil, Operation E1-1A.

## Hub bearings, to adjust—Operation E1-4

*(For removal, refitting and overhaul Instructions, Operations* E1-5 *and* E1-6 *refer)*

Workshop hand tools:
Spanner sizes: $\frac{3}{8}$ in. BSF, $\frac{7}{16}$ in. BSF,
Screwdriver (medium),
Mallet, Circlip pliers, Dial Test Indicator

Special tools:
Spanner for hub bearing nuts, Part No. 606435 (see Section Z for illustration)

### Adjustment procedure

1. Rover type axles—Remove the axle half shaft. Operation E1-2.
2. ENV type axles—Prize off the hub cap, remove the circlip from the axle half shaft and the fixings from the driving member, then withdraw the driving member from the hub.
3. Slacken the fixings at the rear road wheel.
4. Jack up the rear of the vehicle.
5. Remove the rear road wheel.

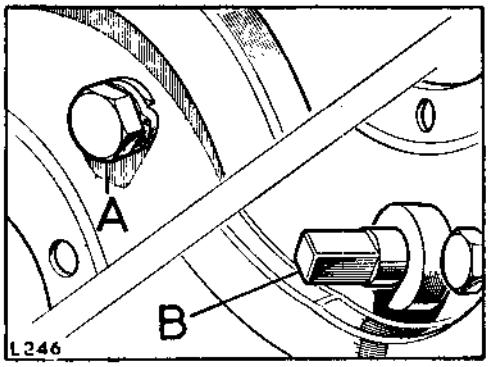


**Fig. E1-13. Rear brake shoe adjuster (two variations in use)**

A—Snail cam type
B—Fulcrum type

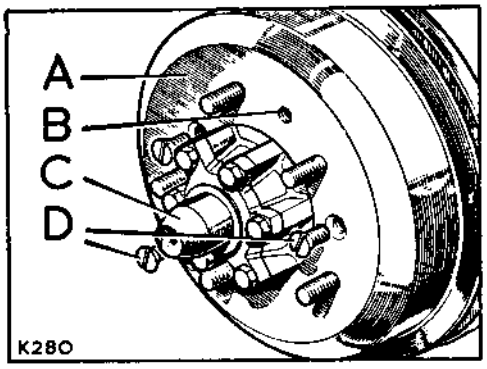


**Fig. E1-14. Removing brake drum**

A—Brake drum
B—Extractor hole
C—Hub
D—Fixings, drum to hub

6. Fully slacken the rear brake shoe adjusters to ensure that the brake linings are clear of the drum.
7. Remove the rear brake drum.
   **Note:** If any difficulty is experienced in withdrawing the brake drum, fit one of the drum fixing screws into the extractor hole, and tighten the screw while using a mallet to dislodge the drum.
8. Remove the locknut and washer from the hub.

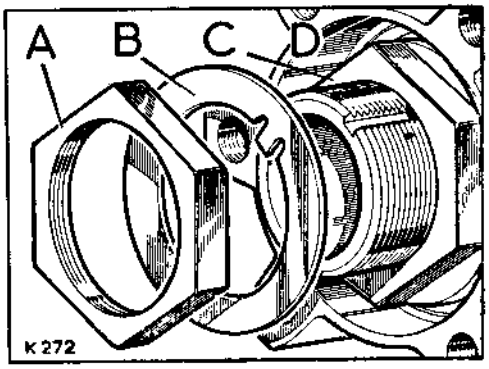


**Fig. E1-15. Hub bearing fixings**

A—Locknut
B—Lockwasher
C—Nut for bearing adjustment
D—Hub

9. Spin the hub vigorously, causing the bearing rollers to settle in the tapered races, producing maximum end-float conditions.
10. Tighten the adjuster nut sufficient only to take up any obvious end-float.
    **Note:** It is necessary to spin the hub every time before checking the end-float, as moving the hub laterally will resettle the rollers, affecting the measurable end-float.
11. Fit the lockwasher and nut, tighten the nut but do not engage the lockwasher.
12. Using a dial test indicator, check the end-float of the hub, which must be .004 in. to .006 in. (0,10 mm to 0,15 mm). See Fig. E1-16.
13. If the hub end-float is not within the permitted limits, remove the locknut and washer, and readjust the inner nut. Fit the lockwasher, tighten the locknut and recheck the end-float.

## Operation E1-4—*continued*

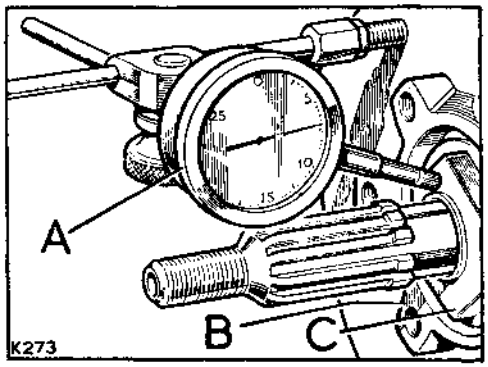


**Fig. E1-16. Checking hub end-float**
(Front hub illustrated, use same method for rear)
A—Dial test Indicator
B—Hub
C—Bearing locknut

14. When the end-float is correct, engage the lock-washer.
15. Complete the reassembly by reversing the removal procedure.
16. Adjust the brakes (Section H).
17. If the hubs are oil lubricated, replenish the lubricating oil. Operation E1-1 (E1-1A).

## Rear hubs, brake anchor plate and bearing sleeve, remove and refit—Operation E1-5

*(For overhaul instructions, Operation E1-6 refers)*

Workshop hand tools:
Spanner sizes : $\frac{7}{16}$ in. BSF, $\frac{7}{16}$ in. AF open end, $\frac{3}{8}$ in. BSF
Circlip pliers, Screwdriver (large), Mallet

Special tools:
Spanner for hub bearing nuts, Part No. 606435 (see Section Z for illustration)

### To remove rear hub

1. Rover type axles—Remove the axle half shaft. Operation E1-2.
2. ENV type axles—Prize off the hub cap, remove the circlip from the axle half shaft and the fixings from the driving member, then withdraw the driving member from the hub.
3. Slacken the fixings at the rear road wheel, jack up the rear of the vehicle and remove the wheel.
4. Fully slacken the rear brake shoe adjuster to ensure that the brake linings are clear of the drum.

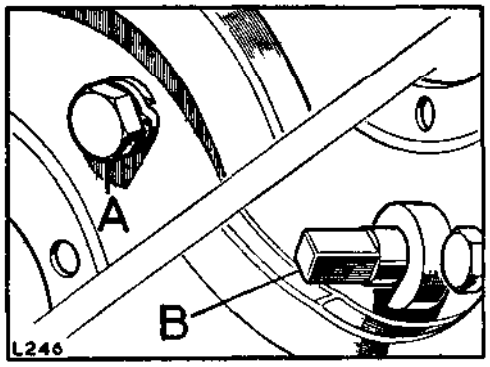


**Fig. E1-17. Brake shoe adjusters (two variations in use)**

A—Snail cam type
B—Fulcrum type

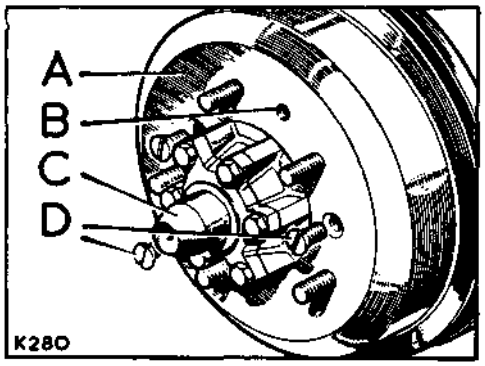


**Fig. E1-18. Removing brake drum**

A—Brake drum
B—Extractor hole
C—Hub
D—Fixings, drum to hub

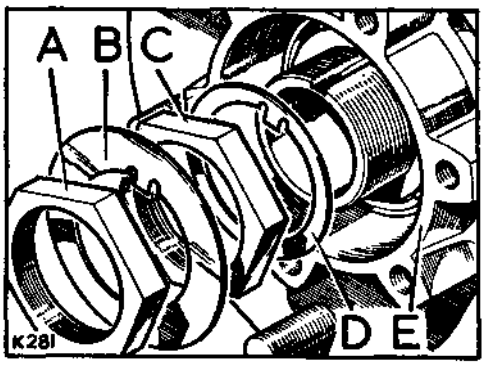


**Fig. E1-19. Hub bearing fixings**

A—Locknut
B—Lockwasher
C—Adjuster nut
D—Key washer
E—Hub

5. Remove the rear brake drum.
   **Note:** If any difficulty is experienced in withdrawing the brake drum, fit one of the drum fixing screws into the extractor hole, and tighten the screw while using a mallet to dislodge the drum.

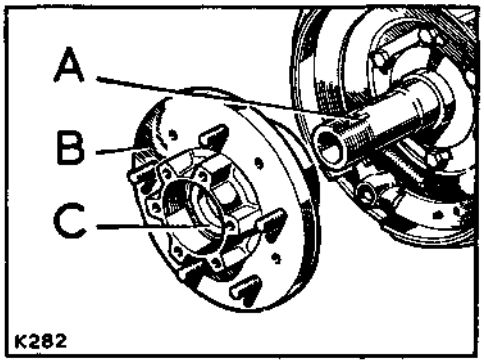


**Fig. E1-20. Removing rear hub and bearing assembly**

A—Bearing sleeve
B—Hub
C—Outer bearing for hub

6. Remove the rear hub bearing fixings.
7. Hold the outer roller bearing in position and withdraw the hub and bearing assembly complete.

## Operation E1-5—*continued*

### To remove brake anchor plate and bearing sleeve

8. Disconnect the brake pipe at the rear of the brake anchor plate, then depress the brake pedal, and wedge it in that position, to prevent further leakage of brake fluid. When depressing the brake pedal, take precautions to avoid fluid spillage.
9. Remove the brake anchor plate and withdraw the bearing sleeve.

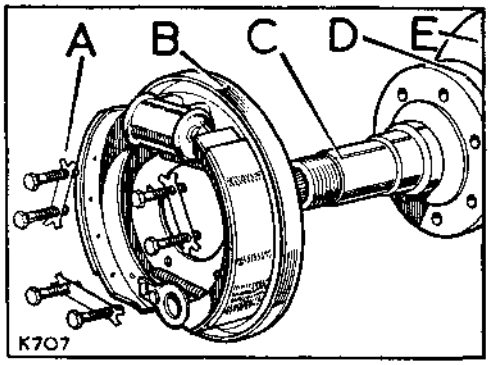


**Fig. E1-21. Rear brake anchor plate and bearing sleeve**
(typical brake plate illustrated)

A—Fixings, brake anchor plate and bearing sleeve to axle case
B—Brake anchor plate
C—Sleeve for hub bearings
D—Joint washer
E—Axle case

### To refit brake anchor plate and bearing sleeve

1. Smear both sides of the joint washer with general purpose grease, and place it in position on the rear face of the hub bearing sleeve.
2. Position the hub bearing sleeve on the axle case, with the keyway at the top, then fit the brake anchor plate with the brake pipe connection located at the top. Ensure that cut-away in back plates face inwards.

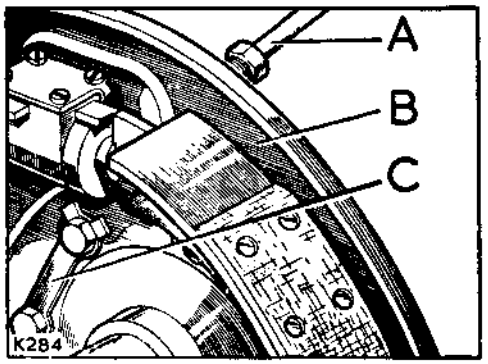


**Fig. E1-22. Fitting brake anchor plate**

A—Brake pipe connection at top
B—Brake anchor plate
C—Cut-away side of lockwasher facing inward

3. Connect the brake pipe at the rear of the brake anchor plate.

### To refit rear hubs

4. Hold the outer roller bearing in position and slide the hub and bearing assembly onto the bearing sleeve.
5. Fit the key washer and bearing adjusting nut, then adjust the bearing end-float. Operation E1-4.
6. Fit the brake drum.
7. Complete the re-assembly by reversing the removal procedure.
8. Replenish the rear axle lubricating oil. Operation E1-1 (E1-1A).
9. Bleed and adjust the brakes. (Section H).

## Rear hubs and bearing sleeve, overhaul—Operation E1-6

*(For removal and refitting instructions, Operation* E1-5 *refers)*
*(For overhaul of brake anchor plate, refer to Section* H)

Workshop hand tools:
Screwdriver (medium), Mallet

### To dismantle

1. Withdraw the outer roller bearing.
2. Prise out the oil seal and withdraw the inner roller bearing.

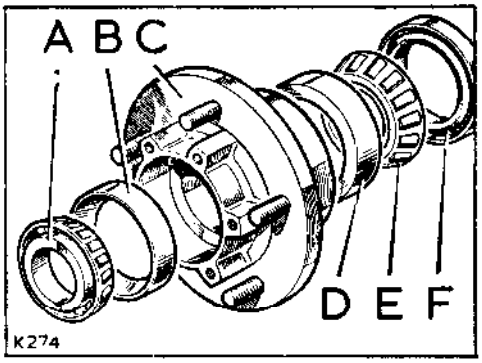


**Fig. E1-23. Rear hub and bearings**

A—Outer roller bearing
B—Outer race for outer bearing
C—Hub
D—Outer race for inner bearing
E—Inner roller bearing
F—Oil seal

3. Press the bearing outer races from the hub.
4. If it is required to remove the inner bearing distance piece from the sleeve, it must be shattered, using extreme care to avoid damaging the sleeve.

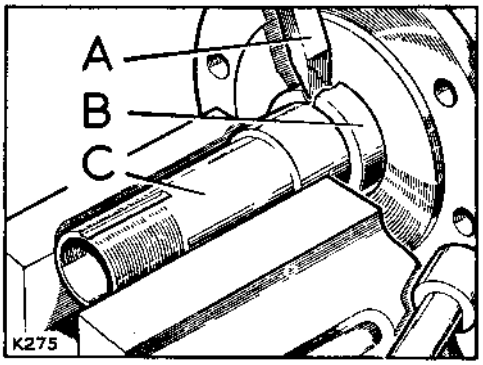


**Fig. E1-24. Removing inner bearing distance piece**

A—Use chisel to shatter
B—Distance piece (shattered)
C—Sleeve for hub bearings

### Inspection

1. Examine all components for obvious wear or damage.
2. Check the outside diameter of the inner bearing distance piece, this must not show any signs of damage or roughness as it forms the inner seat for the oil seal. The distance piece should be a *press fit* on the stub axle. Any clearance between these two parts will allow oil to leak past on to the brake linings.
3. The hub bearings must be a *press fit* in the hub and a *sliding fit* on the sleeve.

### To assemble

1. Press the bearing outer races, wide side first, into the hub, ensuring that they abut the locating shoulders.
2. Using the correct grade of grease, see Section X, fully pack the inner roller bearing and place it in its outer race.
3. Smear the outside diameter of the oil seal with joining compound, and press it into the hub, lipped side inward, until it is flush with the rear face of the hub. DO NOT press the seal below the rear face of the hub, or it may fail to locate its inner seat correctly, resulting in an oil leak which could contaminate the brake linings.

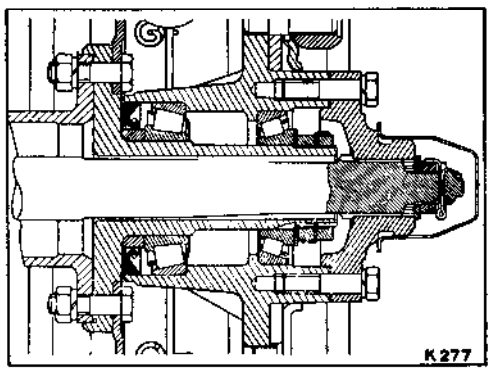


**Fig. E1-25. Cross-section of rear hub**

## Operation E1-6—*continued*

4. Pack the centre of the hub with the correct grade of grease, leaving sufficient space for the bearing sleeve.

5. Fully pack the outer roller bearing with the correct grade of grease, and place it in its outer race.

   **Note:** When fitting the hub to the axle, check the axle case breather (see Operation E1-15), a blocked breather could cause failure of the oil seals fitted in the hubs.

## Rear shock absorbers, remove and refit—Operation E1-7

Workshop hand tools:
Spanner sizes: $\frac{11}{16}$ in. AF, $\frac{3}{4}$ in. AF open end, $\frac{5}{8}$ in. AF socket
Pliers, Screwdriver (medium)

### To remove

1. Slacken the fixings at the rear road wheel.
2. Jack up the rear of the vehicle and support on stands.
3. Remove the rear road wheel.
4. Remove the rear shock absorber.

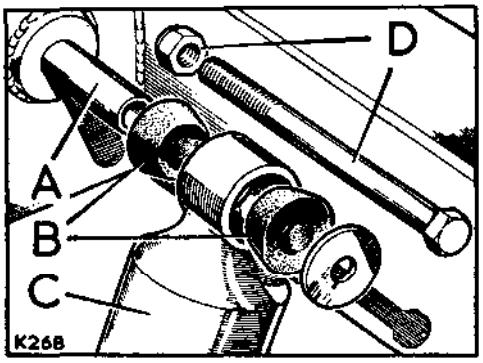


**Fig. E1-26. Shock absorber top fixing**

A—Chassis
B—Rubbers
C—Shock absorber
D—Fixings

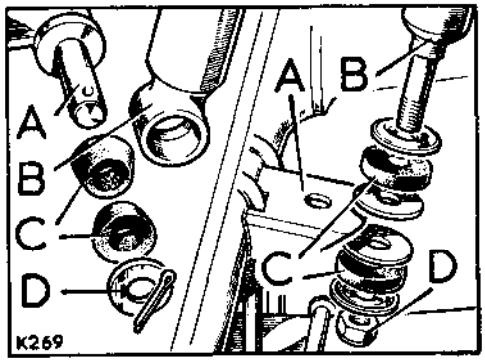


**Fig. E1-27. Shock absorber bottom fixings (alternative types in use)**

A—Chassis
B—Shock absorber
C—Rubbers
D—Fixings

### To check operation of shock absorber

1. Secure the shock absorber vertically in a vice by holding the bottom fixing between the jaws.
2. The shock absorber incorporates differential damping, having greater resistance on the extension stroke. Check the operation, by extending and compressing the shock absorber, there must be a uniform resistance throughout the length of the stroke. If the resistance is erratic or weak, fit a new shock absorber.

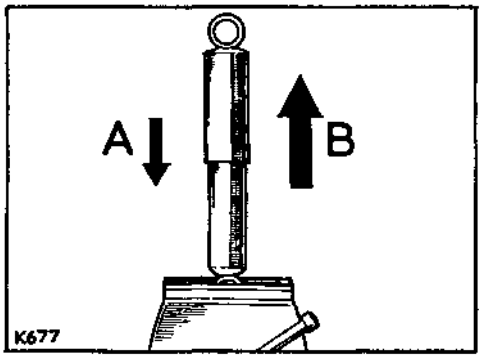


**Fig. E1-28. Checking shock absorber**

A—Compression stroke, light resistance
B—Extension stroke, heavy resistance

### To refit

1. Fit the shock absorber in position.
2. Fully tighten the shock absorber fixings to ensure correct pre-load of the mounting rubbers. Where the fixing is made by split pin, the pre-load of the mounting rubbers is pre-determined by the position of the split pin.
3. Fit the road wheel.

## Rear axle check strap, remove and refit—Operation E1-8

Workshop hand tools:
Spanner sizes: $\frac{9}{16}$ in. AF open end, $\frac{9}{16}$ in. AF socket

### To remove

1. Slacken the fixings at the road wheel.
2. Jack up the vehicle and support on stands.
3. Remove the road wheel.
4. Support the rear axle with a jack.
5. Remove the axle check strap.

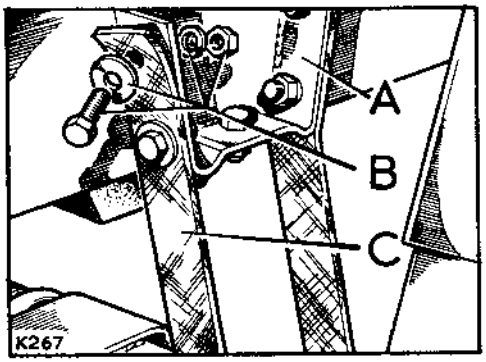


**Fig. E1-29. Check strap for axle**

A—Chassis
B—Fixings, check strap to chassis
C—Check strap

### To refit

1. Fit the axle check strap, ensuring that the strap is located between the brake shield and the axle.

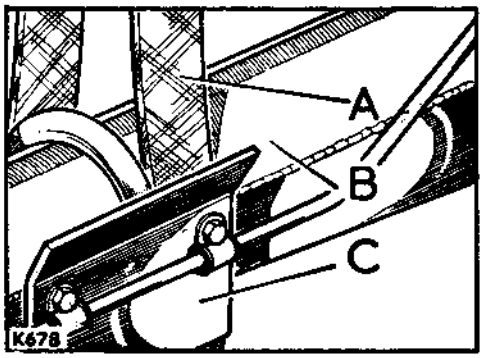


**Fig. E1-30. Check strap location**

A—Check strap
B—Rear axle
C—Shield for brake pipe

2. Fit the road wheel.

## Rear road springs, remove and refit—Operation E1-9

*(For overhaul instructions Operation* E1-10 *refers)*

Workshop hand tools:
Spanner sizes: $\frac{7}{16}$ in. BSF, $\frac{13}{16}$ in. AF, $\frac{7}{8}$ in. AF sockets
Mallet

### IMPORTANT

The driver side and passenger side rear springs are not interchangeable, the free camber of the driver's side spring being greater to compensate for the extra weight (driver, etc.) carried on that side of the vehicle.

**Note:** To assist in identifying spring types, the Part No. is stencilled on the top face and stamped on the under face of one of the leaves.

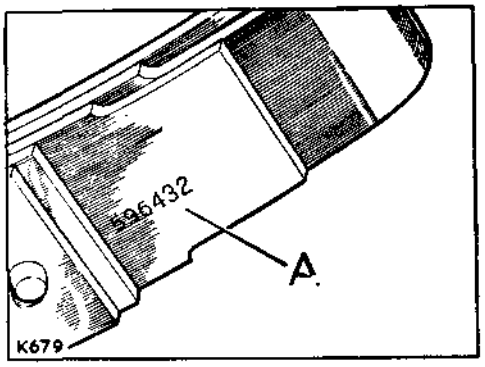


**Fig. E1-31. Spring identification**

A—Part No. stamped on spring

### To remove

1. Jack up the vehicle and support it on jacking stands.
2. Remove the rear wheel.
3. Support the rear axle with a jack.
4. Remove the four nuts and two lockplates securing the spring to the axle.

   **Note:** On certain models, the rear shock absorbers are attached to the spring bottom plate, and where applicable, allow the plate to hang on the shock absorber boss.
   On all models, the brake pipe shields will remain in position, clipped to the pipe.
5. Remove the self-locking nut from the shackle pin in each spring eye.
6. Remove the shackle pin from the rear end of the spring, the pin is threaded into the inner shackle plate.
7. Remove the shackle pin from the front end of the spring.
8. Remove the road spring complete.

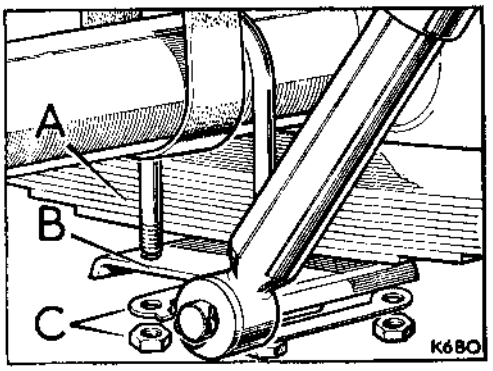


**Fig. E1-32. Rear road spring and axle**

A—Rear road spring
B—Bottom plate for spring
C—Fixings, bottom plate to 'U' bolts

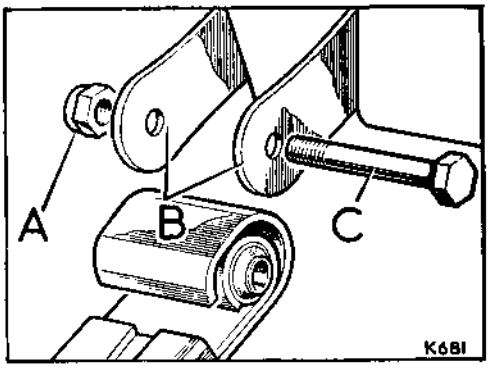


**Fig. E1-33. Rear fixings for road spring**

A—Self-locking nut
B—Shackle plates
C—Shackle pin

### To refit

1. Slacken the shackle pin securing the shackle plates to the chassis.
2. Fit the road spring in position, secure 'U' bolts but do not fully tighten the shackle pins and locking nuts at this stage.
3. Lower the vehicle to the ground and move vehicle bodily backward and forward to settle the springs. Tighten the shackle pins and locking nuts. If the shackle pins and locking nuts are tightened prior to lowering the vehicle to the ground, premature failure of the bushes will occur.

## Rear road springs, overhaul—Operation E1-10

*(For removal and refitting instructions, Operation E1-9 refers)*

Workshop hand tools:
Spanner sizes: $\frac{5}{16}$ in. BSF, $\frac{3}{8}$ in. BSF open end, $\frac{13}{16}$ in. AF, $\frac{7}{8}$ in. AF sockets
Screwdriver (large), Mallet, Hack-saw

### To dismantle

1. Remove the fixings from the leaf clips, which may be bolts and nuts, and/or long screws threaded into the leaf clips.

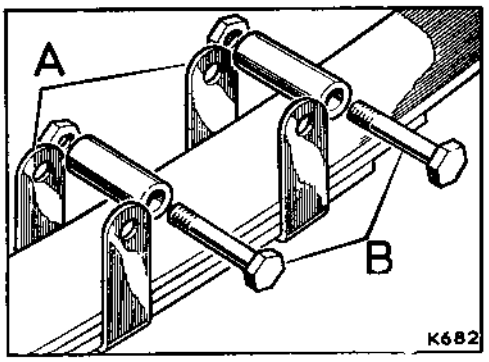


**Fig. E1-34. Spring leaf clips**

A—Leaf clips B—Fixings

2. Remove the centre bolt and nut to release the spring leaves.
3. Press out the bushes from each end of the spring.

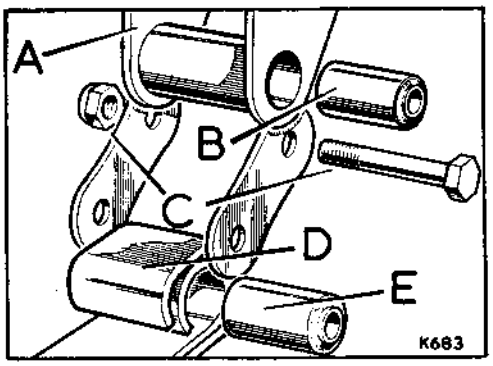


**Fig. E1-35. Bushes for spring**

A—Chassis
B—Bush for chassis
C—Shackle plates and fixings
D—Spring
E—Bush for spring

4. Remove the self-locking nut from the shackle pin securing the shackle plates to the chassis frame. Unscrew the pin from the inner shackle plate and remove it, together with the two plates.
5. If necessary, remove the shackle bush from the chassis frame bracket with the aid of a tubular drift or suitable extractor; if the bush disintegrates, leaving the outer casing in the chassis frame bracket, it should be carefully sawn through with a hack-saw to facilitate removal. DO NOT saw the chassis bracket.

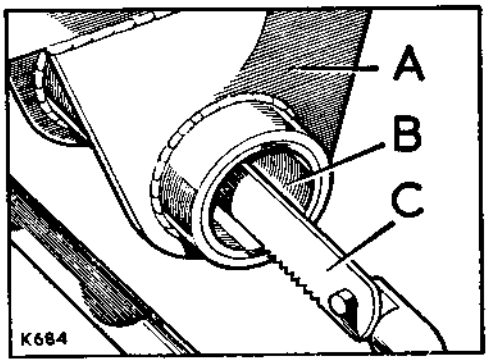


**Fig. E1-36. Removing bush outer case**

A—Chassis frame bracket
B—Bush outer case
C—Hack-saw with blade inverted

### Inspection

1. Clean (or preferably degrease) the leaves; carefully examine them for signs of failure cracks. Only the main and second leaves are supplied as replacement, so that should any other leaf be faulty, the complete spring must be renewed.
2. The recambering of road springs is not advised, but if no alternative is possible, the spring should be reset, if necessary, either to a new spring or to the dimensions included in the data section.

### To assemble

1. If removed, fit the shackle bush to the chassis frame bracket. The bush must be a drive fit.
2. Grease each leaf with graphite grease and reassemble the spring by fitting the centre bolt and leaf clips; fit the spring bushes, which must be a press fit.
3. Fit the shackle plates to the chassis frame, but do not fully tighten the fixings until the spring is refitted to the vehicle.

## Bump stop rubber, remove and refit—Operation E1-11

Workshop hand tools:
Spanner sizes: $\frac{7}{16}$ in. AF open end, $\frac{7}{16}$ in. AF socket

### To remove

1. Slacken the fixings at the road wheel.
2. Jack up the vehicle and support on stands.
3. Remove the road wheel.
4. Remove the bump stop rubber secured to the underside of the chassis member.

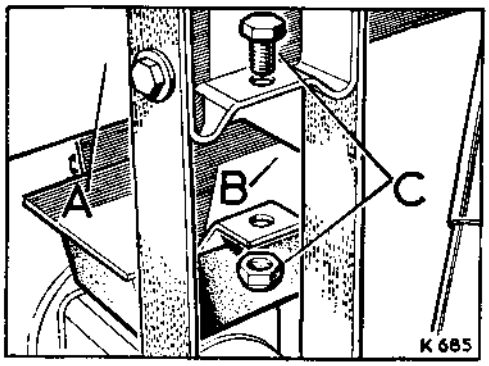


**Fig. E1-37. Bump stop rubber**

A—Chassis B—Bump rubber C—Fixings

### To refit

1. Fit the bump stop rubber, tightening the fixings evenly.
2. Fit the road wheel.

## Oil seal for bevel pinion case, remove and refit—Operation E1-12

Workshop hand tools:
Spanner sizes: $\frac{7}{16}$ in. AF, $\frac{9}{16}$ in. AF, $\frac{3}{4}$ in. AF open end, 1 in. AF socket

### To remove

1. Drain the lubricating oil from the differential Operation E1-1 (E1-1A).
2. Disconnect the rear propeller shaft and move it clear of the differential.

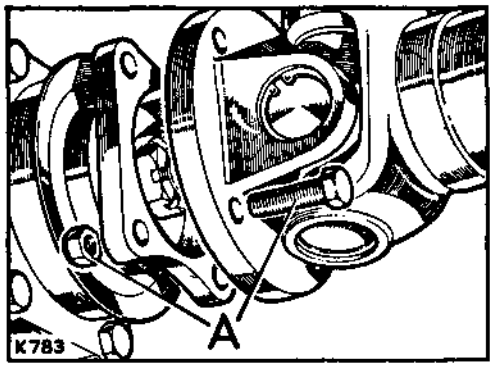


**Fig. E1-38. Propeller shaft for rear axle**

A—Fixings at coupling flanges

3. Remove the driving flange from the bevel pinion shaft.
4. Remove the oil seal retainer and joint washer, taking care not to dislodge the thick distance washer for the flange end bearing.

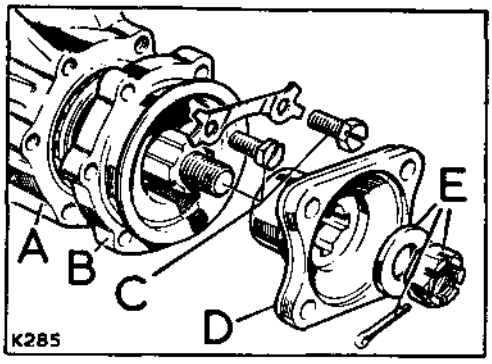


**Fig. E1-39. Driving flange and oil seal retainer**

A—Bevel pinion housing
B—Oil seal retainer
C—Fixings, oil seal retainer
D—Driving flange for bevel pinion
E—Fixings, bevel pinion driving flange

5. Press the oil seal from the retainer.

### To refit

1. Warm the oil seal retainer to facilitate fitting the seal, smear the outside diameter of the seal with jointing compound and fit it, lipped side inward, into the retainer.

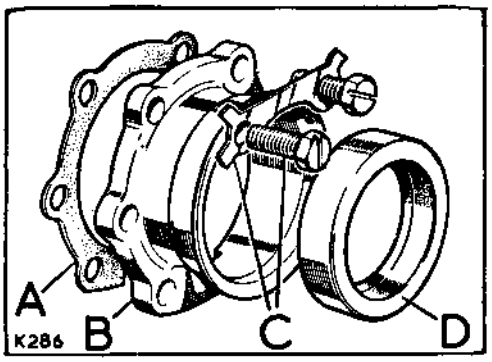


**Fig. E1-40. Oil seal retainer**

A—Joint washer
B—Retainer for oil seal
C—Fixings, oil seal retainer
D—Oil seal

2. Using a new joint washer, smear both sides with a jointing compound and fit the oil seal retainer, ensuring that the oilways in the bevel pinion housing, oil seal retainer and joint washer are aligned. Engage the locking plates.

   **Note:** Before fitting the driving flange, examine the outside diameter for roughness or damage which may have caused failure of the original seal, and rectify or renew as necessary.

3. Fit the driving flange to the bevel pinion, and tighten the securing nut to a torque figure of 85 lb ft (11,75 mkg).
4. Fit the propeller shaft.
5. Replenish the differential lubricating oil. Operation E1-1 (E1-1A).
6. Ensure that the axle case breather is clear (see Operation E1-15), a blocked breather could cause failure of the oil seals fitted in the axle assembly.

## Oil seal for ENV bevel pinion housing, remove and refit—Operation E1-12A

Workshop hand tools:
Spanner sizes: $\frac{9}{16}$ in. AF open end, $\frac{7}{8}$ in. BSF socket
Screwdriver (medium)

### To remove

1. Drain the lubricating oil from the differential. Operation E1-1 (E1-1A).
2. Disconnect rear propeller shaft and move it clear of differential.

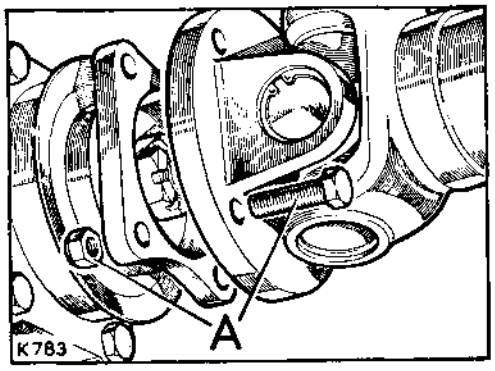


**Fig. E1-41. Propeller shaft for rear axle**

A—Fixings at coupling flanges

3. Remove the driving flange from the bevel pinion shaft.
4. Prise the oil seal from the bevel pinion housing.

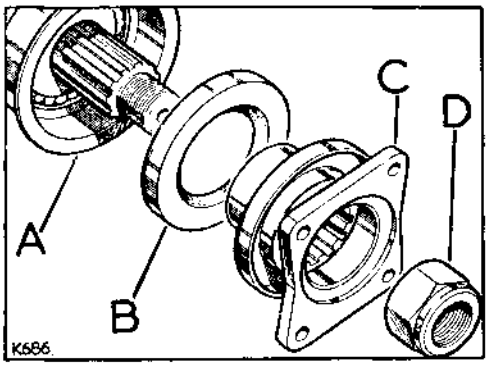


**Fig. E1-42. Oil seal for bevel pinion**

A—Bevel pinion housing
B—Oil seal
C—Driving flange
D—Fixings for driving flange

### To refit

1. Smear the outside diameter of the oil seal with jointing compound and fit it, lipped side inward, into the bevel pinion housing.

   **Note:** Before fitting the driving flange, examine the outside diameter for roughness or damage which may have caused failure of the original seal, and rectify or renew as necessary.

2. Fit the driving flange to the bevel pinion, and tighten the securing nut to a torque figure of 100 to 120 lb ft (14 to 16 mkg).
3. Fit the propeller shaft.
4. Replenish the differential lubricating oil. Operation E1-1 (E1-1A).
5. Ensure that the axle case breather is clear (see Operation E1-15), a blocked breather could cause failure of the oil seals fitted in the axle assembly

## Differential, remove and refit—Operation E1-13

*(For overhaul instructions, Operation* E1-14 (E1-14A) *refers)*

Workshop hand tools:
Spanner sizes: $\frac{3}{8}$ in. BSF socket, $\frac{9}{16}$ in. AF open end

### To remove

1. Drain the lubricating oil from the rear axle. Operation E1-1 (E1-1A).
2. Remove the axle half shafts. Operation E1-2 or E1-3A, as applicable. Note that it is only necessary to withdraw the half shafts sufficient to be clear of the differential.
3. Disconnect the rear propeller shaft and move it clear of the differential.

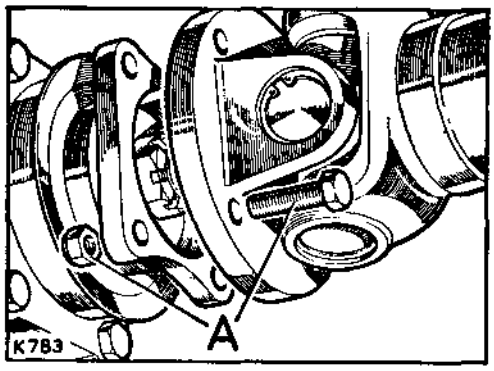


**Fig. E1-43. Propeller shaft for rear axle**

A—Fixings at coupling flanges

4. Remove the differential.

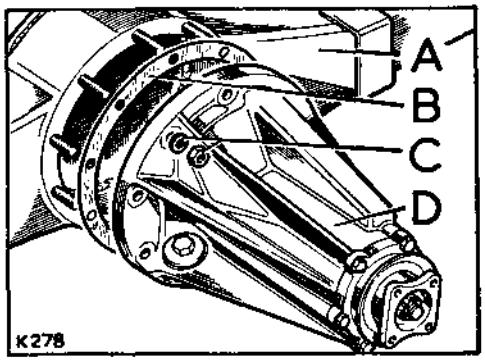


**Fig. E1-44. Differential**

A—Rear axle case
B—Joint washer
C—Fixings, bevel pinion housing to axle case
D—Bevel pinion housing

### To refit

1. Smear general purpose grease on both sides of the joint washer for the differential and place it in position on the axle case.
2. Fit the differential.
3. Fit the propeller shaft.
4. Fit the axle half shafts. Operation E1-2, or E1-3A as applicable.
5. Replenish the rear axle lubricating oil. Operation E1-1 (E1-1A).

## Differential, to overhaul—Operation E1-14

*(For removal and refitting instructions, Operation E1-13 refers)*

Workshop hand tools:
Spanner sizes: $\frac{1}{4}$ in BSF open end
$\frac{3}{8}$ in. BSF, $\frac{7}{16}$ in. BSF, $\frac{5}{8}$ in. BSF sockets
Pliers, Screwdriver (medium), Feeler Gauges,
Dial Test Indicator, Torque Wrench,
Spring Balance, Micrometer

Special tools:
262757 Bearing extractor
530105 Differential spanner
262761, 600299, 601998, 605004 } Height gauge for differential pinion. 1 off, as required. (See text)
606012 Dummy bearing, suffix 'B' axles
606019 Dummy bearing, suffix 'A' axles
530106 Bracket for Dial Test Indicator

Before commencing this operation, verify unit type. See Operation E1-14A.

**Important note:** During dismantling it is essential that all components are marked in their original position and relative to other components, so that if original components are refitted, their initial setting is maintained.

**To dismantle**

1. Remove the bearing caps.
2. Remove the serrated nuts.

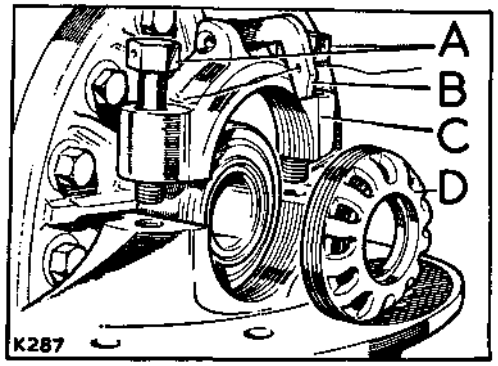


**Fig. E1-45. Bearing caps and adjusters**

A—Fixings, bearing caps
B—Locker, bearing adjuster
C—Bearing cap
D—Serrated nuts

3. Withdraw the crown wheel and differential assembly.
4. Remove the bevel pinion driving flange and withdraw the pinion from the housing.
5. Withdraw the shims from the bevel pinion and extract, or drift off the roller bearing.
6. Remove the oil seal retainer and press out the seal.

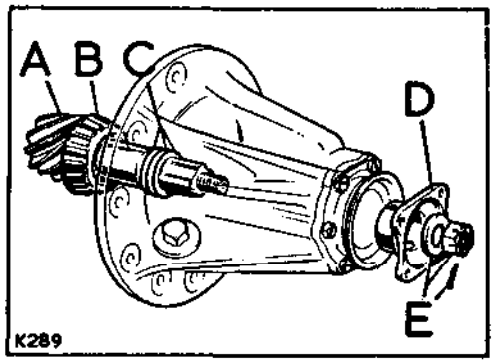


**Fig. E1-46. Bevel pinion and driving flange**

A—Bevel pinion
B—Roller bearing
C—Shims
D—Driving flange
E—Fixings, driving flange

7. Withdraw the distance washer and roller bearing from the bevel pinion housing.

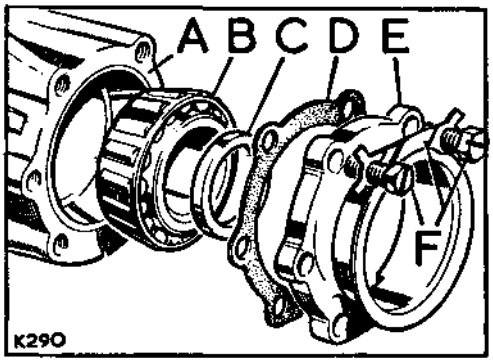


**Fig. E1-47. Oil seal retainer and bearing**

A—Bevel pinion housing
B—Roller bearing
C—Distance washer
D—Joint washer
E—Oil seal retainer
F—Fixings, oil seal retainer

## Operation E1-14—*continued*

8. Press both bearing outer races from the bevel pinion housing, using special tool, Part Number 262757, to remove the pinion end outer race together with its shims.

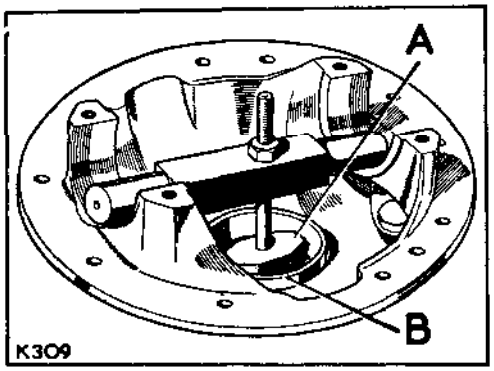


**Fig. E1-48. Pressing out pinion end bearing outer race**

A—Special tool, Part No. 262757
B—Bearing outer race

**CAUTION:** Before using special tool, Part Number 262757, ensure that projections on the extractor bar fit the cast slots at the rear of the bearing outer race. If necessary, grind the projections until a sliding fit is obtained, otherwise the bevel pinion housing may be damaged.

9. Remove the crown wheel from the differential case.

10. Remove the spindle from the differential pinions, rotate the differential wheels to release the pinions, then lift out the differential wheels together with their thrust washers. See Fig. E1-51.

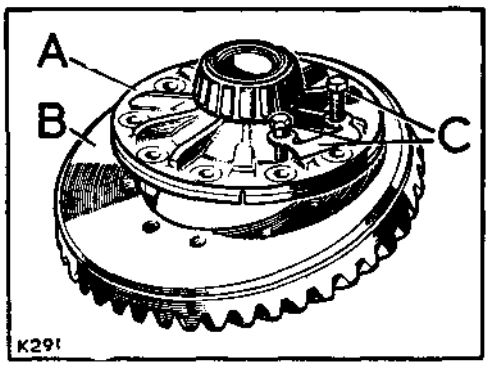


**Fig. E1-49. Crownwheel fixings**

A—Differential case
B—Crownwheel
C—Fixings

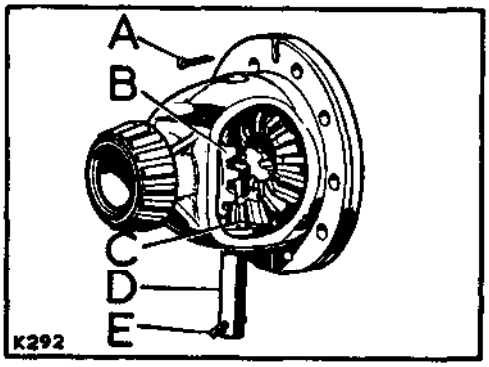


**Fig. E1-50. Spindle for differential pinions**

A—Split pin
B—Differential wheels
C—Differential pinions
D—Spindle
E—Plain pin

11. Extract the roller bearings from the differential case.

## Operation E1-14—*continued*

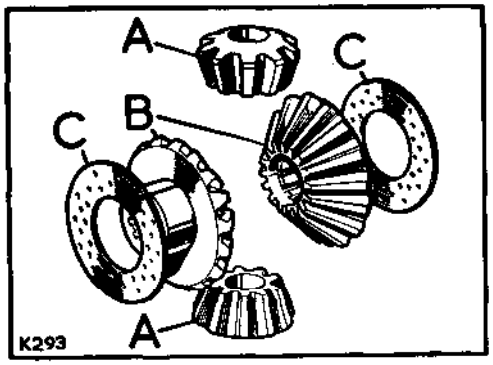


**Fig. E1-51. Differential pinions and wheels**

A—Differential pinions
B—Differential wheels
C—Thrust washers, differential wheels

### Inspection

Examine all components for obvious wear or damage.

All bearings must be a press fit, except the flange end bevel pinion bearing, which must be a slide fit on the shaft.

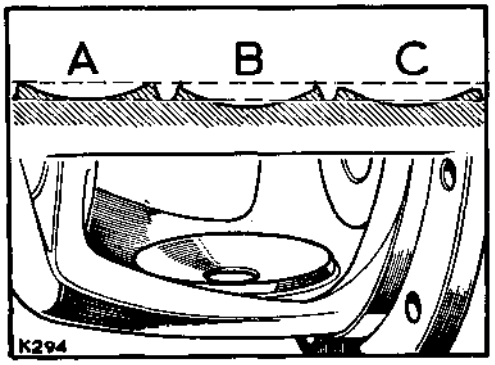


**Fig. E1-52. Differential pinion seats**

A—Seat as new
B—Recessed seat
C—Seat reclaimed by grinding

Crownwheel and pinion is only supplied as a matched set, and MUST NOT be interchanged separately.

Bevel pinion housing and bearing caps are matched sets, and MUST NOT be interchanged separately.

Check the differential pinion seatings in the differential case. The spherical seats must finish flush, without any step or recess due to wear. If a step is present, it must be ground away to prevent the pinion teeth rubbing the casing.

### Pre-assembly checks

### Bevel pinion height setting

The bevel pinion height is adjusted by shimming between the pinion end bearing outer race and the pinion case. The outer race must be a press fit in the pinion case and should not be used while determining shimming. For the purpose of bevel pinion height setting, a loose fitting dummy bearing should be used in place of the pinion end bearing. Dummy bearings are available as follows: Part Number 606019 for use with suffix 'A' axles and Part Number 606012 for use with suffix 'B' axles.

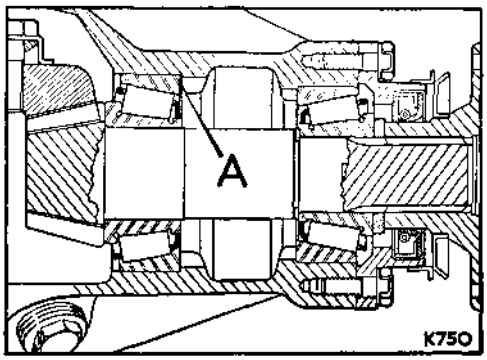


**Fig. E1-53. Bevel pinion height adjustment shims**

A—Shims

The dimensional difference between the width of the real bearing and the dummy bearing must be measured and taken into account when calculating shim thickness required.

## Operation E1-14—*continued*

1. Clean all traces of oil and grease from the bearing to be fitted to the pinion end of the bevel pinion shaft.

2. Measure and record the difference in width between the pinion end bearing and the dummy bearing. Make a number of checks at different points to ensure accuracy.

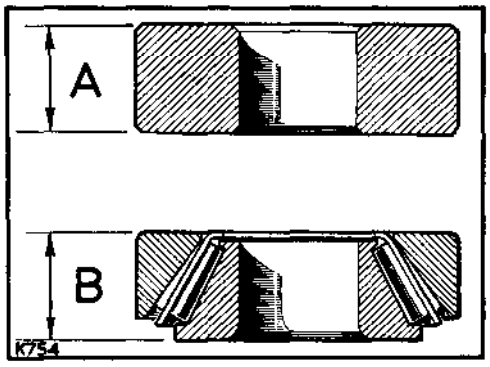


**Fig. E1-54. Comparing real bearing with dummy bearing**

A—Width of dummy bearing
B—Check real bearing width from inner race to outer race

3. Subtract .002 in. (0,05 mm) from the bearing difference dimension already obtained and recorded, to allow for bearing creep which will take place on final assembly when the bearing pre-load is set.

4. Press the flange end bearing outer race into the pinion case.

5. Fit the dummy bearing to the bevel pinion shaft and locate the shaft into the pinion case. DO NOT fit any shims at this stage.

6. Place the flange end roller bearing and distance washer on to the pinion shaft.

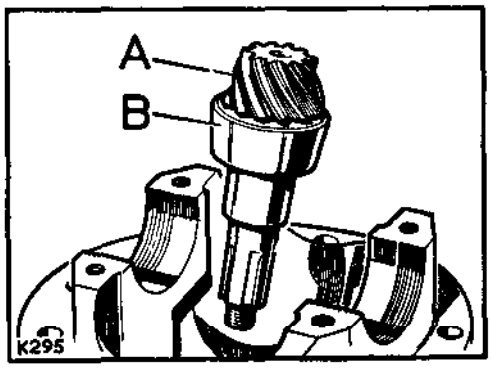


**Fig. E1-55. Dummy bearing for bevel pinion**

A—Bevel pinion
B—Dummy bearing

7. Deliberately omitting the oil seal and retainer, fit the driving flange and tighten the securing nut until the bevel pinion is stiff to turn, this will ensure that all clearance is removed without damaging the bearing.

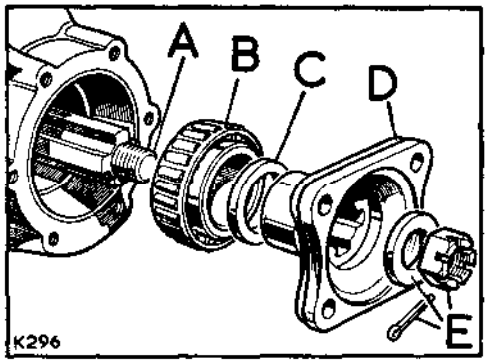


**Fig. E1-56. Pinion driving flange**

A—Pinion shaft
B—Roller bearing
C—Distance washer
D—Driving flange
E—Fixings, driving flange

## Operation E1-14—*continued*

8. Locate the pinion height gauge into the pinion housing and secure with the bearing caps.

   **Note:** There are four variations of height gauge in use, and either one may be used.

9. Place the slip gauge on to the pinion face and, while held firmly in position, use feeler gauges to measure the clearance between the height gauge and the slip gauge, note the dimension obtained.

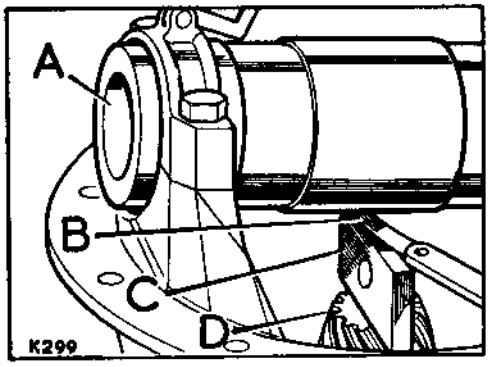


**Fig. E1-57. Checking pinion height**

A—Height gauge
B—Feeler gauge
C—Slip gauge
D—Pinion

10. Remove the height gauge, and check the markings on the pinion face. In addition to the production batch number which will be found on the face of all pinions, there may also be a pinion height dimension, which can be ± .005 in. (± 0,12 mm). There may also be a further dimension, prefixed with the letter H or HD indicating 'head depth', this can be zero to — .004 in. (zero — 0,10 mm). These dimensions must be taken into account when setting the pinion height, regardless of which type of pinion height gauge is being used. Where a pinion has no dimensional marking, use the pinion height '0' and head depth '0' when referring to the following charts.

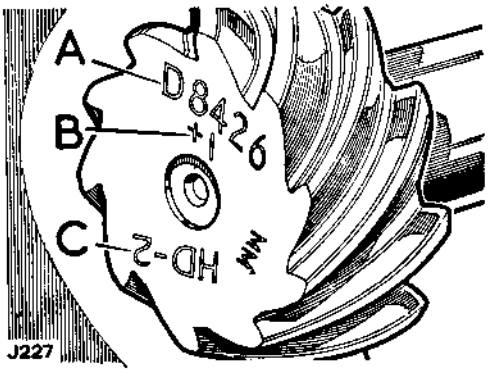


**Fig. E1-58. Pinion height and head depth markings**

A—Batch number
B—Height dimension
C—Head depth dimension

Illustration shows batch number, +1 pinion height indicating +.001 in. (0,02 mm) pinion height and HD-2 indicating —.002 in. (0,05 mm) head depth.

Chart A. To be used with height gauges, Part Nos. 601998, 262761 and 600299:

**Final feeler gauge clearance**

| Pinion height markings | —4 in. | —4 mm | —3 in. | —3 mm | —2 in. | —2 mm | —1 in. | —1 mm | 0 in. | 0 mm |
|---|---|---|---|---|---|---|---|---|---|---|
| +5 | .012 | 0,30 | .011 | 0,27 | .010 | 0,25 | .009 | 0,22 | .008 | 0,20 |
| +4 | .011 | 0,27 | .010 | 0,25 | .009 | 0,22 | .008 | 0,20 | .007 | 0,17 |
| +3 | .010 | 0,25 | .009 | 0,22 | .008 | 0,20 | .007 | 0,17 | .006 | 0,15 |
| +2 | .009 | 0,22 | .008 | 0,20 | .007 | 0,17 | .006 | 0,15 | .005 | 0,12 |
| +1 | .008 | 0,20 | .007 | 0,17 | .006 | 0,15 | .005 | 0,12 | .004 | 0,10 |
| 0 | .007 | 0,17 | .006 | 0,15 | .005 | 0,12 | .004 | 0,10 | .003 | 0,07 |
| —1 | .006 | 0,15 | .005 | 0,12 | .004 | 0,10 | .003 | 0,07 | .002 | 0,05 |
| —2 | .005 | 0,12 | .004 | 0,10 | .003 | 0,07 | .002 | 0,05 | .001 | 0,02 |
| —3 | .004 | 0,10 | .003 | 0,07 | .002 | 0,05 | .001 | 0,02 | .000 | 0,00 |
| —4 | .003 | 0,07 | .002 | 0,05 | .001 | 0,02 | .000 | 0,00 | .001 * | 0,02 |
| —5 | .002 | 0,05 | .001 | 0,02 | .000 | 0,00 | .001 * | 0,02 | .002 * | 0,05 |

**Head depth (H or HD) markings**

Any pinion marking dimensions falling within the space marked with an asterisk (*) add the figure shown to the initial measurement taken between height gauge and slip gauge.

## Operation E1-14—*continued*

Chart B. To be used with height gauge, Part No. 605004:

**Final feeler gauge clearance**

| Pinion height markings | −4 | | −3 | | −2 | | −1 | | 0 | |
|---|---|---|---|---|---|---|---|---|---|---|
| | in. | mm | in. | mm | in. | mm | in. | mm | in. | mm |
| +5 | .020 | 0,50 | .019 | 0,48 | .018 | 0,45 | .017 | 0,43 | .016 | 0,40 |
| +4 | .019 | 0,48 | .018 | 0,45 | .017 | 0,43 | .016 | 0,40 | .015 | 0,38 |
| +3 | .018 | 0,45 | .017 | 0,43 | .016 | 0,40 | .015 | 0,38 | .014 | 0,35 |
| +2 | .017 | 0,43 | .016 | 0,40 | .015 | 0,38 | .014 | 0,35 | .013 | 0,33 |
| +1 | .016 | 0,40 | .015 | 0,38 | .014 | 0,35 | .013 | 0,33 | .012 | 0,30 |
| 0 | .015 | 0,38 | .014 | 0,35 | .013 | 0,33 | .012 | 0,30 | .011 | 0,27 |
| −1 | .014 | 0,35 | .013 | 0,33 | .012 | 0,30 | .011 | 0,27 | .010 | 0,25 |
| −2 | .013 | 0,33 | .012 | 0,30 | .011 | 0,27 | .010 | 0,25 | .009 | 0,22 |
| −3 | .012 | 0,30 | .011 | 0,27 | .010 | 0,25 | .009 | 0,22 | .008 | 0,20 |
| −4 | .011 | 0,27 | .010 | 0,25 | .009 | 0,22 | .008 | 0,20 | .007 | 0,17 |
| −5 | .010 | 0,25 | .009 | 0,22 | .008 | 0,20 | .007 | 0,17 | .006 | 0,15 |

**Head depth (H or HD) markings**

11. From the height gauge dimension previously recorded, subtract the figure obtained from the applicable chart, then from the result, subtract the amended bearing difference dimension (difference between width of real bearing and dummy bearing, minus .002 in. (0,05 mm). The final result is equal to the thickness of shims required between the pinion end bearing outer race and the pinion case.

    The following is an example of the recommended method of calculating shims for setting the bevel pinion height. The figures quoted are examples only, and must not be regarded as applicable.

| | | |
|---|---|---|
| Width of pinion end bearing .. .. | 1.156 in. | (29,36 mm) |
| Width of dummy bearing | 1.152 in. | (29,26 mm) |
| Difference .. .. | .004 in. | (0,10 mm) |
| Subtract .002 in. for bearing pre-load .. .. | .002 in. | (0,05 mm) |
| Amended bearing difference .. .. | .002 in. | (0,05 mm) |
| Pinion height gauge clearance | .042 in. | (1,06 mm) |

Assuming pinion markings as illustrated and Chart A applicable:

| | | |
|---|---|---|
| Subtract chart reading .. | .006 in. | (0,15 mm) |
| | .036 in. | (0,91 mm) |
| Subtract amended bearing difference .. .. | .002 in. | (0,05 mm) |
| | .034 in. | (0,86 mm) |
| Thickness of shims required between pinion end bearing outer race and pinion case | .034 in. | (0,86 mm) |

### Bevel pinion bearing pre-load

1. Press the pinion end bearing outer race, together with the shims previously determined for pinion height setting, into the pinion case. See Fig. E1-60.
2. Press the pinion end roller bearing on to the pinion shaft. See Fig. E1-61.

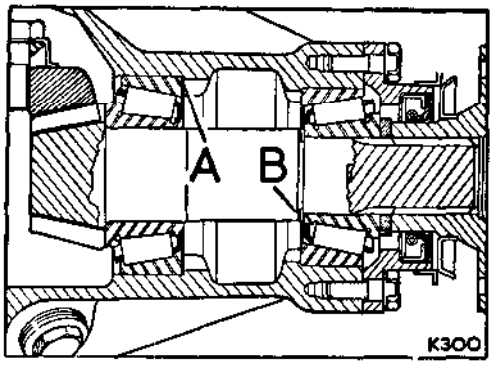


**Fig. E1-59. Bevel pinion adjustment shims**

A—Shims, pinion height adjustment
B—Shims bearing pre-load adjustment

## Operation E1-14—*continued*

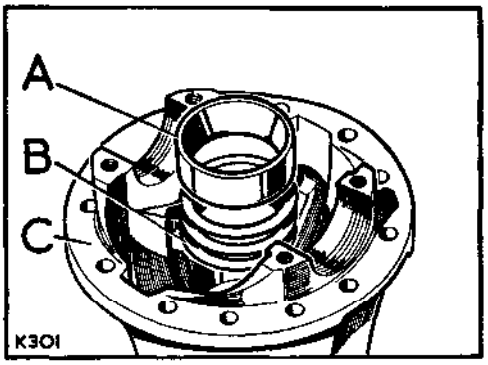


**Fig. E1-60. Bearing outer race, pinion end**

A—Outer race
B—Shims
C—Pinion case

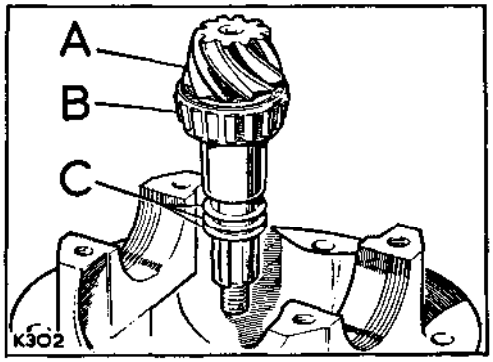


**Fig. E1-61. Pinion assembly**

A—Pinion shaft
B—Roller bearing, pinion end
C—Shims

3. Locate the pinion shaft into the case together with the bearing pre-load adjustment shims removed during dismantling.

**Note:** Axles up to serial number with suffix 'A' use shims ranging from .003 in. (0,076 mm) to .020 in. (0,5 mm) which must have special support washers fitted at each end. Axles from suffix 'B' onwards use shims ranging from .072 in. (1,82 mm) to .081 in. (2,05 mm) in place of the support washers. If the shims have been mislaid, use new shims of at least .020 in. (0,5 mm) thickness for suffix 'A' axles, and .180 in. (4,57 mm) for suffix 'B' axles.

4. Place the flange end roller bearing and distance washer on to the pinion shaft. See Fig. E1-66.
5. Deliberately omitting the oil seal and retainer, fit the driving flange and tighten the securing nut to 85 lb ft (11,75 mkg) torque loading.
6. Check the bevel pinion bearing pre-load by measuring the rolling resistance of the pinion shaft, using a nylon cord attached to a spring balance. Tie the cord to the driving flange, then coil it around the hub of the flange and note the measurement recorded on the spring balance required to rotate the pinion shaft, after having overcome inertia. Bearing pre-load is correct when a figure of 7 to 12 lb (3,2 to 4,5 kg) is recorded on the spring balance.

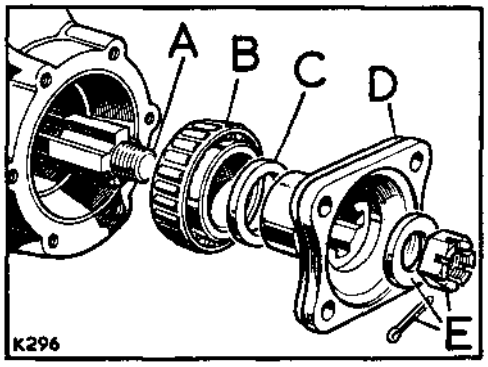


**Fig. E1-62. Pinion driving flange**

A—Pinion shaft
B—Roller bearing
C—Distance washer
D—Driving flange
E—Fixings, driving flange

## Operation E1-14—*continued*

Adjustment can be made by changing the shims located on the pinion shaft between the bearings, shims are available in a range of thicknesses. Thicker shimming will reduce bearing pre-load, thinner shimming will increase pre-load.

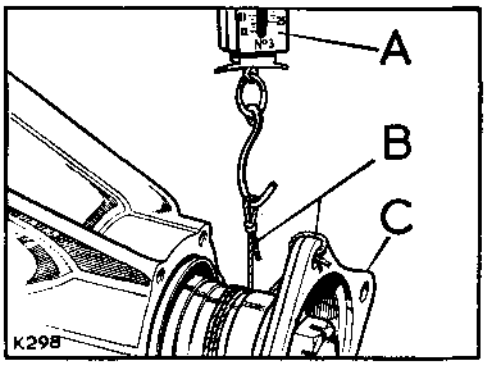


**Fig. E1-63. Checking bevel pinion bearing pre-load**

A—Spring balance
B—Nylon cord
C—Driving flange

7. When the bevel pinion bearing pre-load is correct reposition the pinion height gauge and check that the clearance between the height gauge and slip gauge agrees with the figure obtained from the chart±.001 in. (±0,02 mm). Should adjustment be necessary, add or subtract shims beneath the pinion end bearing outer race, then reset the bevel pinion bearing pre-load.

   When the bevel pinion height and bearing pre-load is correct, remove the driving flange and place aside for subsequent assembly.

### Differential wheel and pinion backlash

1. Place a thrust washer in position on the rear face of each differential wheel.
2. Locate the two differential wheels and thrust washers into the differential case.

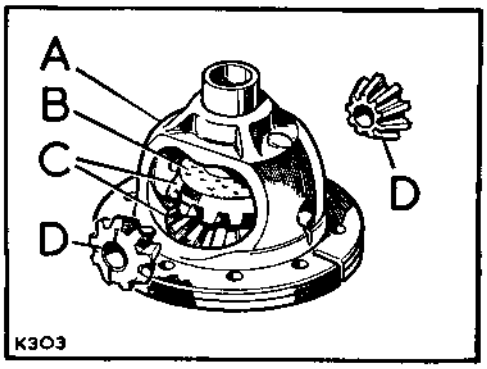


**Fig. E1-64. Differential assembly**

A—Differential case
B—Thrust washer
C—Differential wheels
D—Differential pinions

3. Insert the differential pinions through the two apertures in the case, at exactly opposite points, then rotate the wheel and pinion assembly to align the holes in the pinions and case for the pinion spindle.

   **Note:** If original components are being refitted, ensure that the wheel and pinion assembly is in its original position before fitting the spindle.

4. Ensure that the plain pin is secure in the pinion spindle, then fit the spindle to the differential assembly.
5. Check for backlash between the differential wheels and pinions, a manual check is sufficient, no actual measuring is necessary. There must be a definite backlash, but this must be the minimum obtainable consistent with smooth running wheels and pinions. Adjustment can be made by changing the thrust washers for the differential wheels, which are available in a range of thicknesses.

## Operation E1-14—*continued*

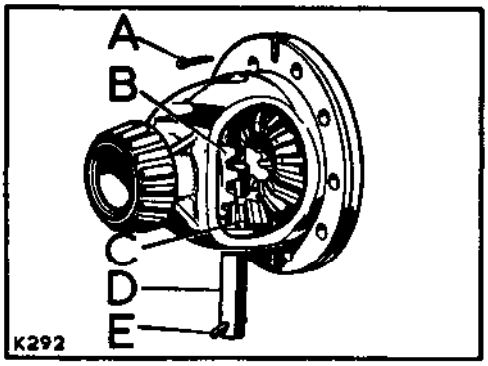


**Fig. E1-65. Spindle for differential pinions**

A—Split pin
B—Differential wheels
C—Differential pinions
D—Spindle
E—Plain pin

### To assemble

1. Warm the retainer for the pinion case oil seal, smear the outside diameter of the seal with jointing compound and fit it, lipped side inward, into the retainer.
2. Smear both sides of the joint washer with jointing compound and place it in position on the oil seal retainer. Fit the oil seal retainer to the pinion case, ensuring that the oilways in the bevel pinion housing, oil seal retainer and joint washer are aligned.
3. Fit the driving flange to the bevel pinion, and tighten the securing nut to a torque figure of 85 lb ft (11,75 mkg).
4. Align the crownwheel with the differential case and secure in position, noting that two of the securing bolts are fitted bolts, .390 in. (10 mm) diameter shank, and must be fitted diametrically opposite and be tightened to a torque figure of 45 lb ft (6,2 mkg). The remainder of the bolts have a .375 in. (9,5 mm) diameter shank, and must be tightened to a torque figure of 35 lb ft (4,8 mkg). Tighten the bolts evenly to avoid distortion.

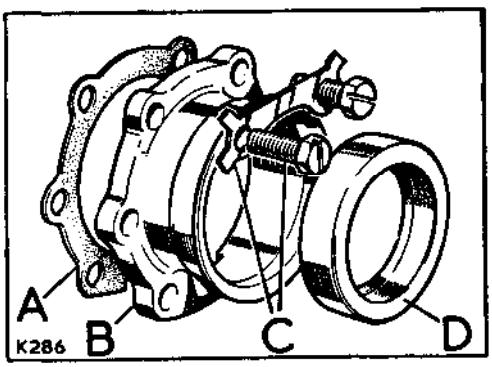


**Fig. E1-66. Oil seal retainer**

A—Joint washer
B—Retainer for oil seal
C—Fixings, oil seal retainer
D—Oil seal

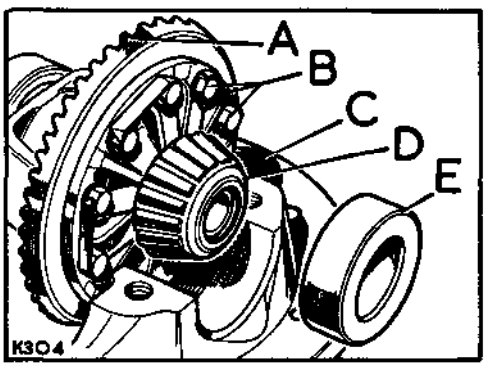


**Fig. E-67. Crownwheel assembly**

A—Crownwheel
B—Fixings, crownwheel to differential case
C—Bevel pinion case
D—Roller bearing
E—Bearing outer race

## Operation E1-14—*continued*

5. Fit the taper roller bearings, wide side first, to each side of the differential case.

6. Place the bearing outer races in position on the differential assembly and locate the assembly into the bevel pinion housing.

7. Fit the two serrated nuts and bearing caps to their respective sides of the bevel pinion housing. Tighten the bearing cap securing bolts firmly, but not fully.

8. Using special tool, Part Number 530105, tighten both serrated nuts to remove all bearing end-float without introducing pre-load.

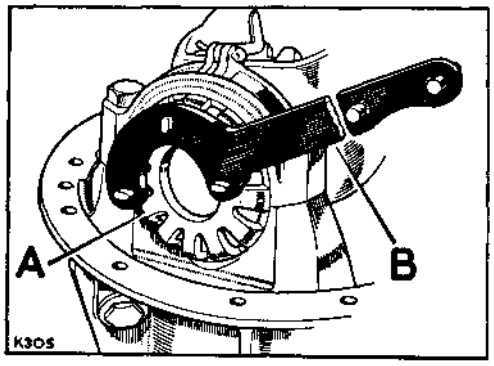


**Fig. E1-68. Adjusting serrated nuts**

A—Serrated nut
B—Special tool Part No. 530105

9. Using a dial test indicator, measure the run-out on the rear face of the crownwheel, this must not exceed .004 in. (0,10 mm). If excessive run-out is recorded, the crownwheel and differential must be removed from the bevel pinion housing, and the crownwheel repositioned on the differential case. Re-assemble and recheck. If necessary, this procedure must be repeated until the run-out is correct.

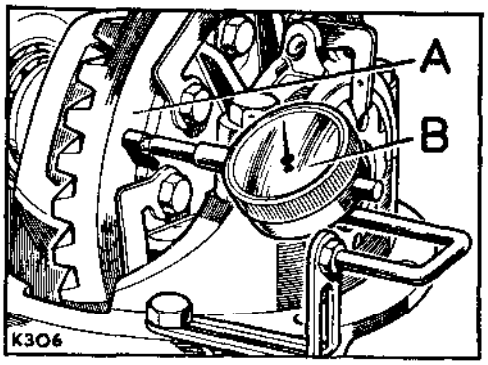


**Fig. E1-69. Checking crownwheel run-out**

A—Rear face of crownwheel
B—Dial test indicator

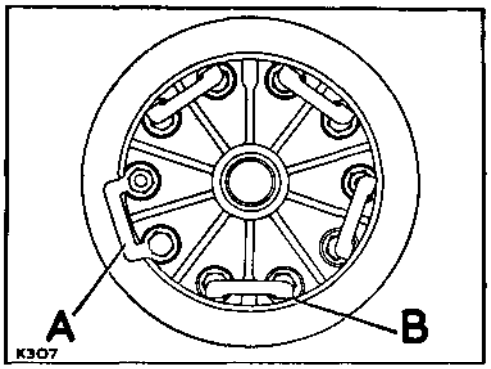


**Fig. E1-70. Engaging crownwheel lock plates**

A—Lockplates before engagement
B—Lockplates engaged

10. When the crownwheel run-out is correct, ensure that the lockplates are fully engaged over the crownwheel securing bolts.

11. Using a dial test indicator, check the crownwheel to bevel pinion backlash. This must be .008 in. to .010 in. (0,20 mm to 0,25 mm). Where necessary, adjust the crownwheel backlash by alternately slackening and tightening the serrated nuts until the backlash is correct.

## Operation E1-14—*continued*

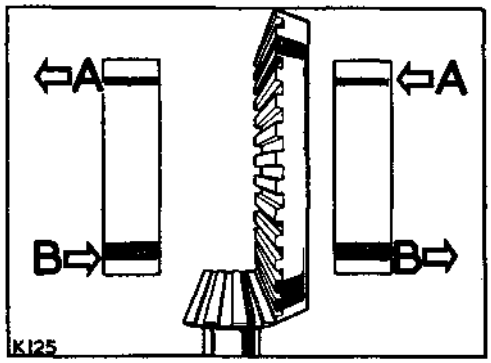


**Fig. E1-71. Adjusting crownwheel to bevel pinion backlash**

A—Move serrated nuts as indicated to reduce backlash
B—Move serrated nuts as indicated to increase backlash

12. With the backlash correct and no bearing end-float or pre-load, tighten both serrated nuts by half a serration only, to pre-load the taper roller bearings.

13. Engage the lockers into the serrated nuts. If either locker is not opposite a serration, bend it to fit the nearest serration in the anti-clockwise direction.

14. Fully tighten the bearing cap securing bolts to a torque figure of 60 lb ft (8,3 mkg), and wire-lock, together with the locker for the serrated nut.

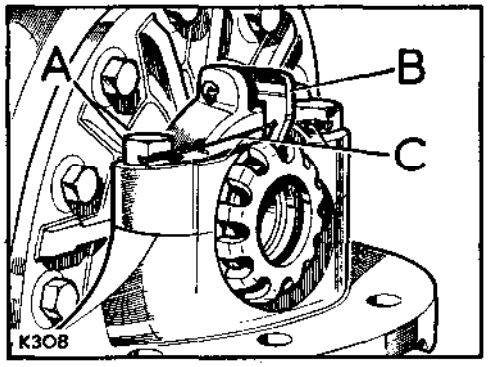


**Fig. E1-72. Wire locking**

A—Bolts securing bearing caps
B—Locker for serrated nut
C—Locking wire

**Note:** When refitting the differential, ensure that the axle case breather is clear (see Operation E1-15), a blocked breather could cause failure of the oil seals fitted in the axle assembly.

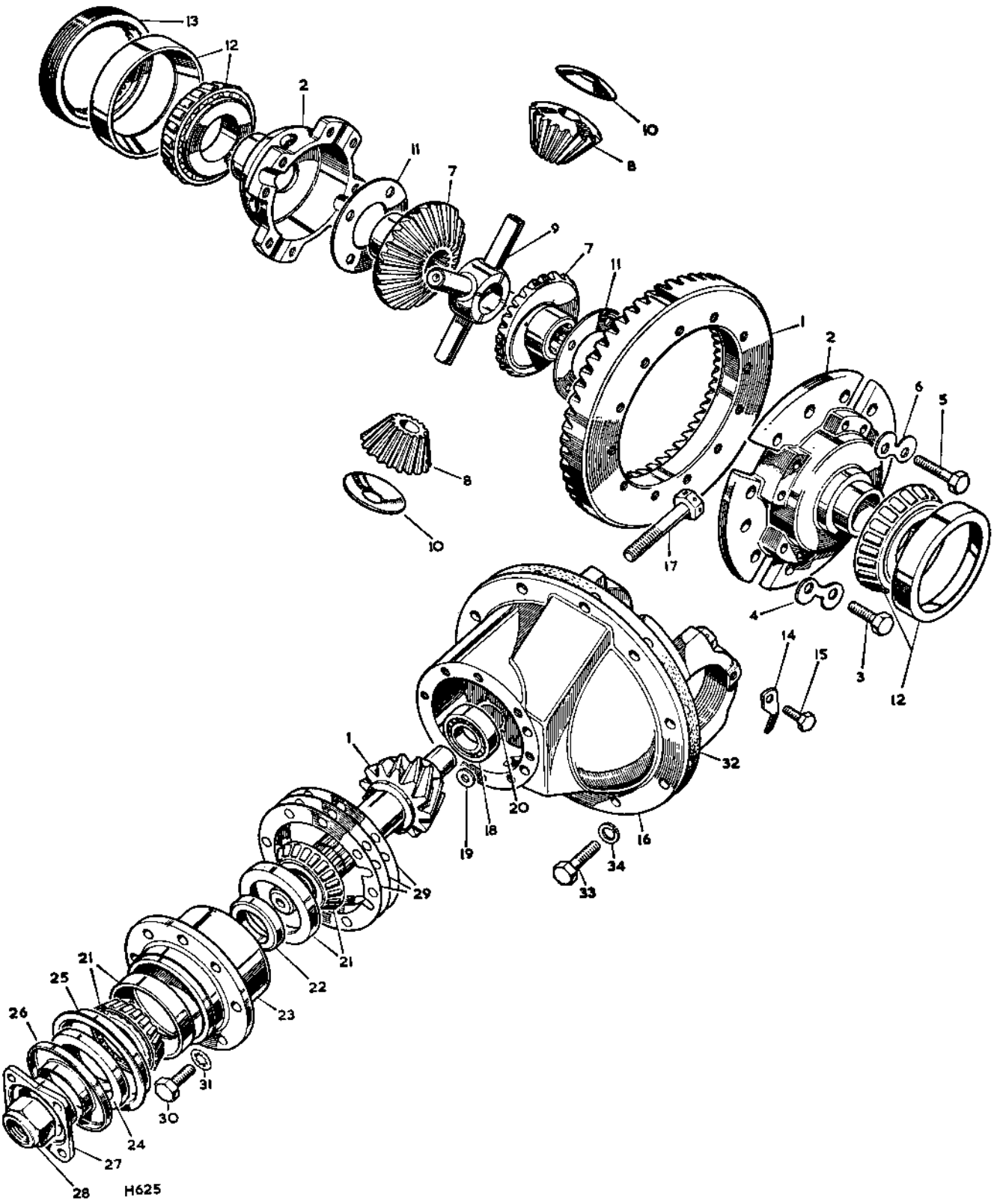


**Fig. E1-73. Differential, ENV type**

### Key to illustration of ENV differential

1 Crownwheel and bevel pinion
2 Differential casing
3 Set bolt ($\frac{7}{16}$ in. UNF x 1 in. long) } Fixing crownwheel to differential
4 Locking plate } Fixing crownwheel to differential
5 Set bolt ($\frac{7}{16}$ in. UNF x $1\frac{3}{4}$ in. long) } Fixing differential case halves together
6 Locking plate } Fixing differential case halves together
7 Differential wheel
8 Differential pinion
9 Spindle for pinions
10 Spherical washer, differential pinion
11 Washer, differential wheel
12 Taper roller bearing for differential
13 Adjuster, differential bearings
14 Locking plate } For bearing adjuster
15 Set bolt } For bearing adjuster
16 Nose piece complete with bearing caps
17 Special bolt fixing bearing cap
18 Bearing for bevel pinion, nose end
19 Retaining washer
20 Circlip
21 Bearing for bevel pinion
22 Spacer for bearing adjustment
23 Bevel pinion housing
24 Oil seal for pinion
25 Mudshield for bevel pinion housing
26 Mudshield for driving flange
27 Driving flange for bevel pinion
28 Special nut fixing driving flange
29 Shim, bevel pinion to crownwheel engagement
30 Set bolt } Fixing pinion housing to nose piece
31 Shakeproof washer } Fixing pinion housing to nose piece
32 Joint washer, differential to axle casing
33 Set bolt } Fixing differential to axle casing
34 Spring washer } Fixing differential to axle casing

## ENV Differential, to overhaul—Operation E1-14A

*(For removal and refitting instructions, Operation* E1-13 *refers)*

Workshop hand tools:

Spanner sizes: $\frac{7}{16}$ in. AF, $\frac{9}{16}$ in. AF, $\frac{5}{8}$ in. AF, $\frac{13}{16}$ in. AF, $\frac{1}{8}$ in. BSF sockets
Pliers, Mallet, Dial Test Indicator, Spring Balance, 1 in. Micrometer, Two $\frac{5}{16}$ in. diameter Whitworth Bolts threaded length $2\frac{1}{2}$ in., Engineers Marking Blue, Torque Wrench

Special tools:

Tool for bearing adjustment, Part Number 600970

**Important note:** During dismantling it is essential that all components are marked in their original position and relative to other components, so that if original components are refitted, their initial setting will be maintained.

### To dismantle

1. Slacken both bearing caps, then using special tool, Part No. 600970, slacken both bearing adjusters.
2. Remove bearing caps and adjusters.

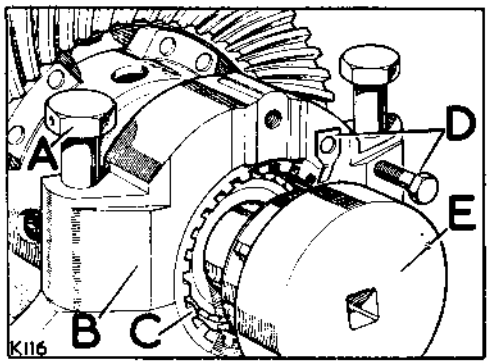


**Fig. E1-74. Bearing caps and adjusters**

A—Fixings, bearing caps
B—Bearing cap
C—Bearing adjuster
D—Locker, bearing adjuster
E—Special tool, Part No. 600970

3. Pass a suitable bar through the differential case and carefully lift the differential from the nose piece.
4. Remove the fixings from the bevel pinion housing and extract the housing from the nose piece, using the two extractor holes which are tapped $\frac{5}{16}$ in. Whitworth.

   Note and retain the shims fitted between the bevel pinion housing and the nose piece.

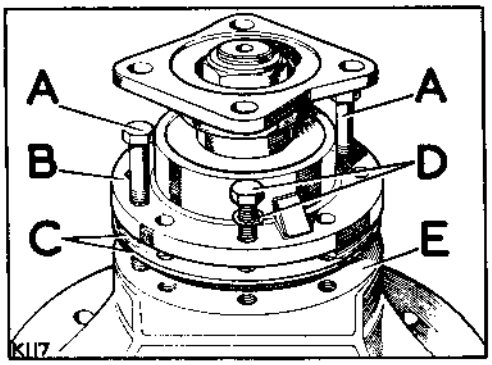


**Fig. E1-75. Bevel pinion housing removal**

A—Extractor bolts ($\frac{5}{16}$ in. Whitworth)
B—Bevel pinion housing
C—Shims
D—Fixings, bevel pinion housing to nose piece
E—Nose piece

5. Remove the rivet and washer retaining the bevel pinion nose end bearing and press the bearing from the nose piece.

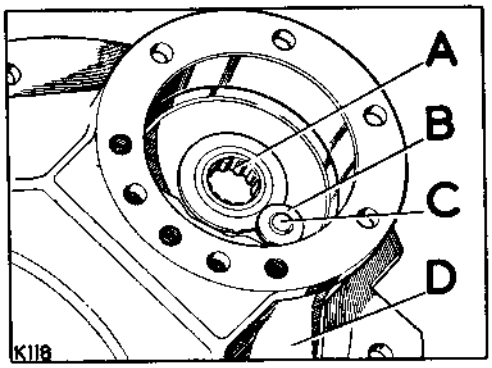


**Fig. E1-76. Bearing in nose piece for bevel pinion**

A—Bearing, bevel pinion nose end
B—Washer, retaining bearing
C—Rivet, retaining washer
D—Nose piece

## Operation E1-14A—*continued*

6. Remove the driving flange from the bevel pinion.
7. Press the bevel pinion complete with bearing end spacer from the housing.
8. Remove the oil seal, taper roller bearing and two bearing outer races from the bevel pinion housing. If required, remove the mudshields from the pinion housing and driving flange.

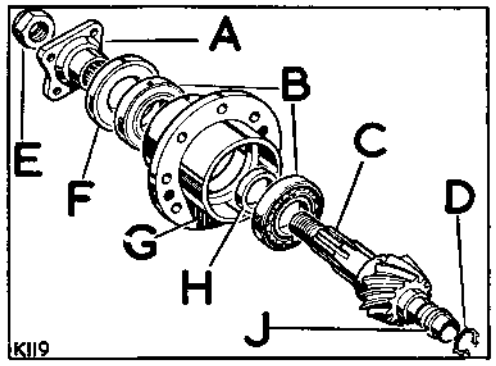


**Fig. E1-77. Bevelpinion, bearings and housing**

A—Driving flange
B—Roller bearings
C—Bevel pinion
D—Circlip, retaining inner race
E—Fixing, driving flange to bevel pinion
F—Oil seal
G—Bevel pinion housing
H—Spacer
J—Inner race, nose bearing

9. Remove spacer and roller bearing from the bevel pinion shaft also remove the circlip and inner race for nose bearing.
10. Remove the crownwheel from the differential housing.
11. Extract the two roller bearings from the outside of differential casing.
12. Separate the differential casing halves and withdraw the differential pinion assembly and the two differential wheels.

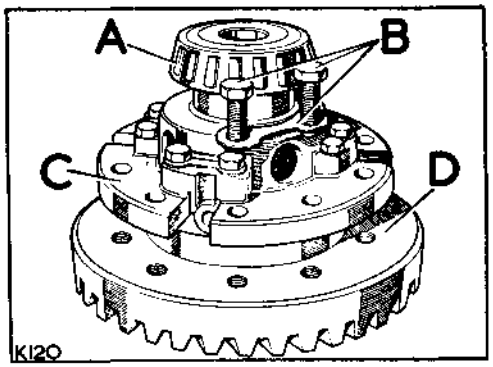


**Fig. E1-78. Crownwheel and differential case**

A—Roller bearings for differential case
B—Fixings (outer ring of bolts) crownwheel to differential housing
C—Differential case
D—Crownwheel

13. Withdraw the spherical washers and differential pinions from the spindle.
14. Withdraw the washers for the differential wheels, these may be adhering to the wheels or may remain in the casing halves.

### Inspection

Inspect all components for wear or damage and renew as necessary.

The self-locking nut securing the bevel pinion driving flange must be a tight fit on the thread, if not, use a new nut.

If either the crownwheel or bevel pinion is worn or damaged, they can only be replaced as a pair.

Renew all lockplates.

## Operation E1-14A—*continued*

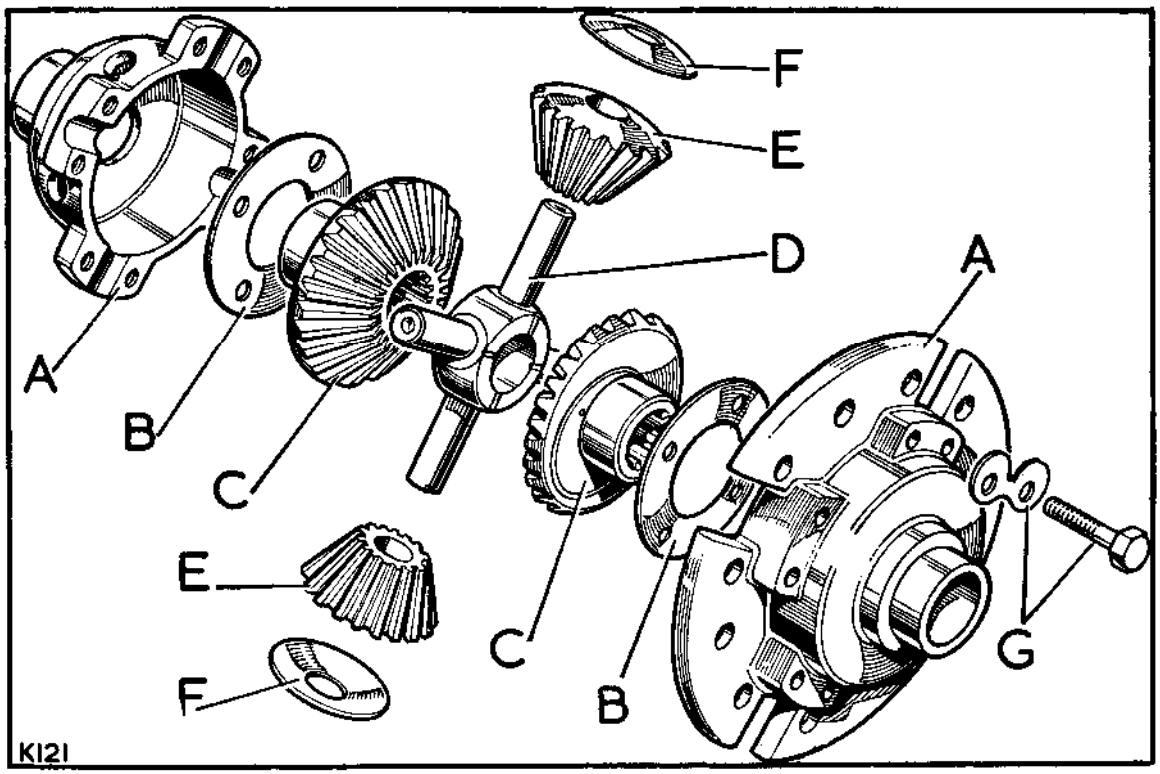


**Fig. E1-79. Differential assembly**

A—Differential casing
B—Washer, differential wheel
C—Differential wheel
D—Spindle for pinions
E—Differential pinions
F—Spherical washers, differential pinions
G—Fixings, differential casing halves

### To re-assemble

During the re-assembly, it is of the utmost importance that all original components are refitted in their original positions in accordance with the alignment marks made during dismantling.

1. Fit the bevel pinion nose roller bearing into the nose piece and secure with a washer and rivet. See Fig. E1-76.
2. Fit the washers and differential wheels to their respective case halves.
3. Assemble the differential pinions and spherical washers to the spindle, and locate the assembly into the smaller differential case half. See Fig. E1-79.

## Operation E1-14A—*continued*

4. Align the differential case halves and secure together, tighten the securing bolts to a torque figure of 50 to 60 lbs ft (7,0 to 0,8 mkg) then engage the lock plates.
5. Align the crownwheel with the differential case and secure in position. Tighten the securing bolts to a torque figure of 60 to 70 lbs ft (8,0 to 10,0 mkg) but do not engage the lock plates at this stage. See Fig. E1-78.
6. Fit a taper roller bearing, wide side first, to each side of the differential casing.
7. Place the bearing outer races in position on the differential assembly and locate the assembly into the nose piece.
8. Fit the two bearing adjusters and end caps to their respective sides of the nose piece, tighten bearing cap securing bolts firmly but not fully. See Fig. E1-74.
9. Tighten both bearing adjusters to remove all end-float without introducing bearing pre-load.

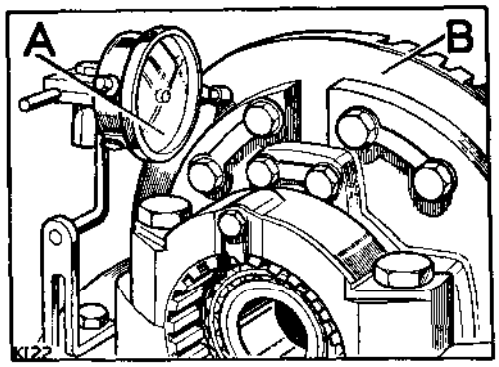


**Fig. E1-80. Checking crownwheel run-out**

A—Dial test indicator
B—Rear face of crownwheel

10. Using a dial test indicator, measure the run-out on the rear face of the crownwheel, this must not exceed .003 in. (0,08 mm). If excessive run-out is recorded, the crownwheel and differential assembly must be removed from the nose piece, and the crownwheel re-positioned on the differential case. Re-assemble and recheck, if necessary this procedure must be repeated until the run-out is correct.
11. Engage the lock plates on the crownwheel securing bolts.
12. Fit the inner race and circlip to the nose end of the bevel pinion.
13. Press the taper roller bearing, wide side first, on to the bevel pinion shaft to abut with the pinion.
14. Fit the two bearing outer races, wide side first, into the bevel pinion housing. If removed, fit the mudshields to the pinion housing and driving flange. See Fig. E1-77.
15. Locate the bevel pinion into its housing and fit the bearing spacer and second roller taper bearing.
16. Fit the driving flange to the bevel pinion and tighten the securing nut to a torque figure of 100 to 120 lbs ft (14 to 16 mkg).

    **Note:** The pinion oil seal is deliberately omitted at this stage.

17. Check the bevel pinion bearing pre-load by measuring the rolling resistance of the bearing housing, using a nylon cord attached to a spring balance. Tie the cord to the housing flange, and coil it round the bearing housing, not the flange, and note the measurement recorded on the spring balance required to rotate the housing after having overcome inertia. Bearing pre-load is correct when a figure of 4½ to 9 lbs (2 to 4 kg) is recorded on the spring balance. Adjustment can be made by changing the bearing spacer which is available in a range of thicknesses. A thicker spacer will reduce the bearing pre-load, a thinner spacer will increase the bearing pre-load.
18. When the bevel pinion bearing pre-load is correct, remove the driving flange, smear the outside of the oil seal with jointing compound and fit the oil seal to the housing, then refit the driving flange and tighten the securing nut to a torque figure of 100 to 120 lb ft (14 to 16 mkg).

## Operation E1-14A—*continued*

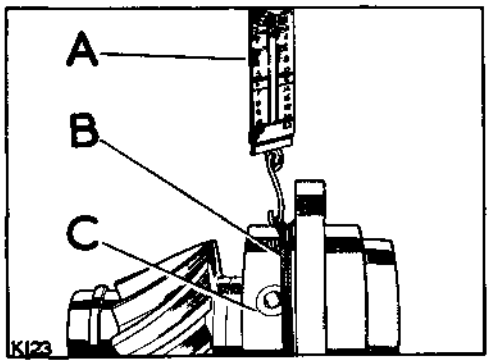


**Fig. E1-81. Checking bevel pinion bearing pre-load**

A—Spring balance
B—Nylon cord
C—Bearing housing

19. Fit the bevel pinion housing complete with shims to the nose piece, carefully aligning the oilways in the housing, shims and nose piece. Tighten the housing securing bolts to a torque figure of 40 to 50 lb ft (5,5 to 7,0 mkg).

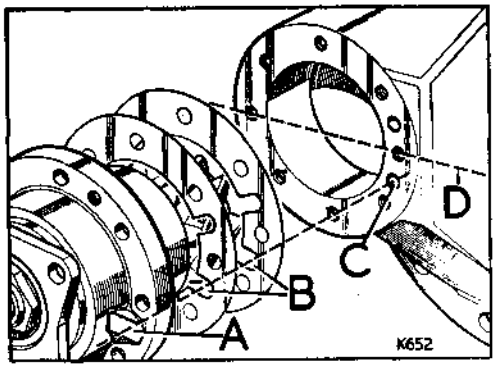


**Fig. E1-82. Alignment of oilways**

A—Oilway in nose piece
B—Oilway in shims
C—Oilway in bevel pinion housing
D—Horizontal centre line

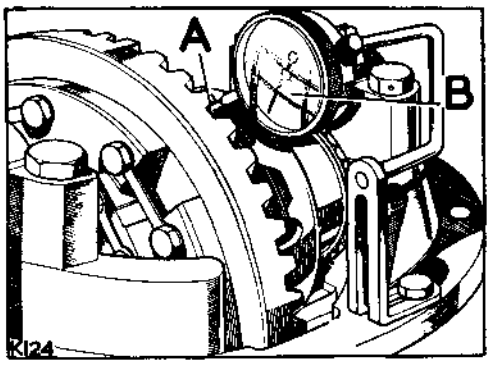


**Fig. E1-83. Checking crownwheel backlash**

A—Periphery of crownwheel teeth
B—Dial test indicator

20. Using the dial test indicator, check the crownwheel to bevel pinion backlash. This must be between .006 in. to .009 in. (0,15 mm to 0,23 mm). Where necessary adjust the crownwheel backlash by alternately slackening and tightening the bearing adjusters until the backlash is correct.

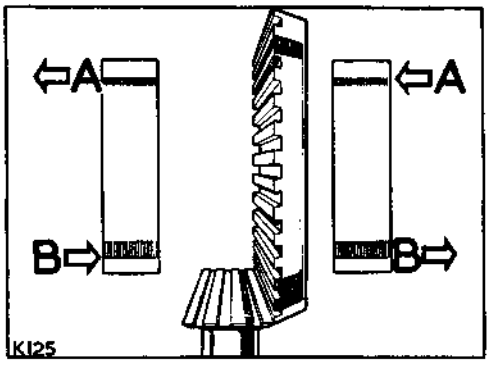


**Fig. E1-84. Adjusting crownwheel to bevel pinion backlash**

A—Move adjusters as indicated to reduce backlash
B—Move adjusters as indicated to increase backlash

21. Check the bevel pinion to crownwheel engagement, using Engineers Blue on the crownwheel

## Operation E1-14A—*continued*

teeth and rotate to obtain a reading. Correct engagement will give a mid-tooth reading. If a reading at the tooth root or crown is produced, this can be corrected by adjusting the shim thickness between the bevel pinion housing and the nose piece, any adjustment made to the shim thickness must be followed by a check and re-adjustment of the crownwheel to bevel pinion backlash.

22. When the bevel pinion to crownwheel engagement and backlash are correct, tighten both bearing adjusters by one serration to pre-load the roller bearings. Fully tighten the bearing cap bolts to a torque figure of 80 to 100 lb ft (11,0 to 14,0 mkg) and secure with locking wire. Fit the locking plates to secure both bearing adjusters.

**Note:** When refitting the differential, ensure that the axle case breather is clear (see Operation E1-15), a blocked breather could cause failure of the oil seals fitted to the axle assembly.

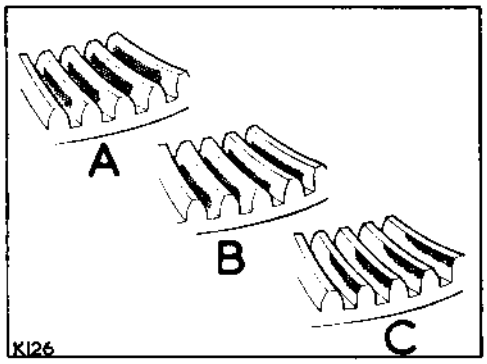


**Fig. E1-85. Checking bevel pinion to crownwheel engagement**

A—Position of marking shows correct engagement
B—Excessive engagement, increase shim thickness
C—Insufficient engagement, reduce shim thickness

## Rear axle case, remove and refit—Operation E1-15

Workshop hand tools:
Spanner sizes: $\frac{3}{16}$ in. BSF, $\frac{3}{16}$ in. AF, $\frac{11}{16}$ in. AF, $\frac{3}{4}$ in. AF open end
$\frac{3}{8}$ in. BSF, $\frac{7}{16}$ in. BSF, $\frac{9}{16}$ in. BSF, $\frac{5}{8}$ in. AF, 2 in. AF sockets
Pliers, Screwdriver (medium)

### To remove

1. Drain the rear axle lubricating oil. Operation E1-1 (E1-1A).
2. Remove the rear axle half shafts. Operation E1-2 or E1-3A, as applicable.
3. Remove the rear hubs. Operation E1-5.
   **Note:** It is not necessary to remove the hub bearing fixings, the hub, bearing sleeve and brake anchor plate can be removed as one unit.
4. Remove the rear shock absorbers. Operation E1-7.
   **Note:** If the shock absorber lower fixing is secured to the bottom plate for the 'U'-bolts, it can be left in place, but the upper fixing must be slackened to prevent damaging the mounting rubbers when pivoting the shock absorber and bottom plate clear of the road spring.
5. Remove the differential. Operation E1-13.
6. Disconnect the rear brake pipe at the connection with the flexible pipe and withdraw the flexible pipe from the chassis bracket, then depress the brake pedal, and wedge it in that position. to prevent further leakage of brake fluid. When depressing the brake pedal, take precautions to avoid fluid spillage.

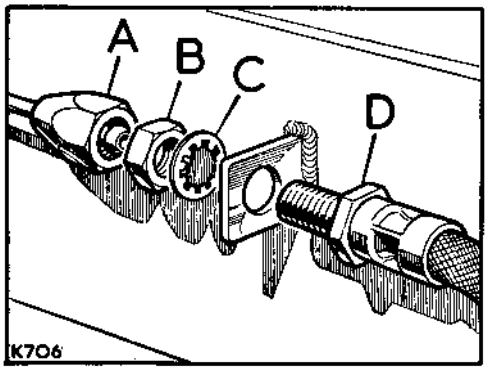


**Fig. E1-86. Rear brake pipe connection**

A—Pipe from master cylinder
B—Locknut
C—Shakeproof washer
D—Union and flexible brake pipe

7. Release the rear brake clips from the shields at each end of the axle case.
8. Remove the large hose clip securing the brake pipe to the rear axle case, release the T-piece from the bracket above the final drive case and withdraw the rear brake pipe assembly from the vehicle.

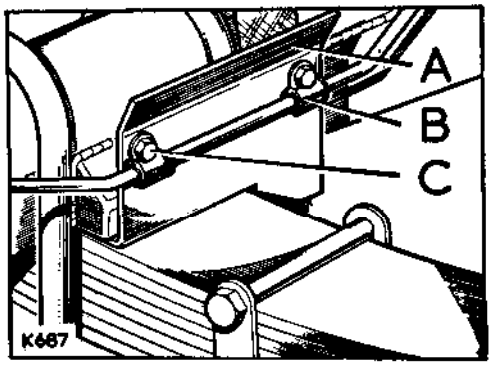


**Fig. E1-87. Brake pipe shield clips**

A—Shield for brake pipe
B—Clips, brake pipe to shield
C—Fixings, clips to shield

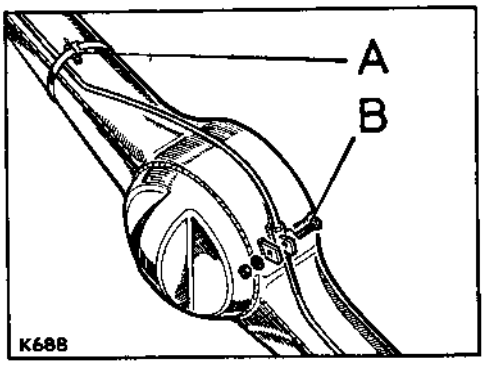


**Fig. E1-88. Brake pipe clips at rear axle**

A—Hose clip
B—Fixings for T-piece

9. Support the rear axle with a jack and disconnect one end of each check strap.

## Operation E1-15—*continued*

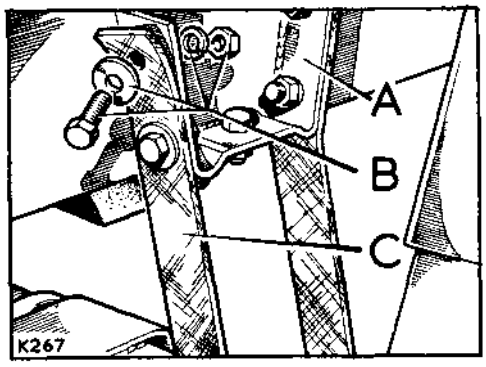


**Fig. E1-89. Check strap for axle**

A—Chassis
B—Fixings, check strap to chassis
C—Check strap

10. Remove the four 'U' bolts, and withdraw the axle case from the vehicle.

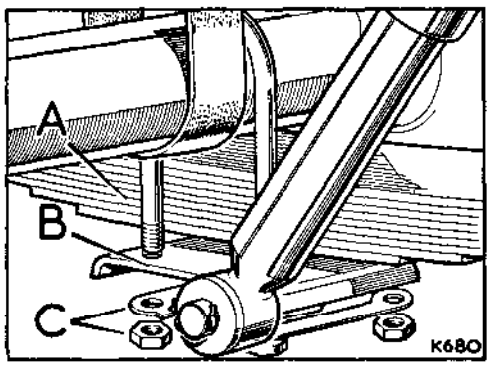


**Fig. E1-90. Axle 'U' bolts**

A—Road spring
B—Bottom plate
C—Fixings for 'U' bolts

### To refit

1. Before fitting the axle case, ensure that the breather is clear, a blocked breather could cause failure of the final drive oil seals.

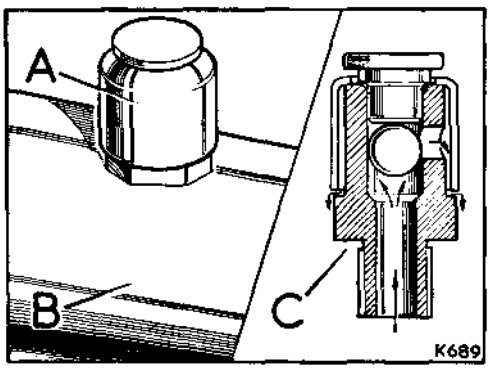


**Fig. E1-91. Breather for axle case**

A—Breather
B—Axle case
C—Flow through breather

2. Place the brake pipe shields in position on the road springs.

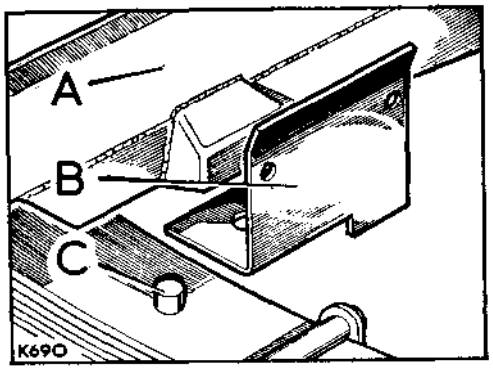


**Fig. E1-92. Brake pipe shield location**

A—Axle
B—Shield, with off-set toward centre of vehicle
C—Centre bolt for road spring

3. Locate the axle case in position on the road springs.
4. Fit the bottom plate and axle 'U' bolts and engage the lock plates.
5. Jack up the rear axle sufficient to fit the check straps. Ensure that the strap is located between the brake shield and the axle.

## Operation E1-15—*continued*

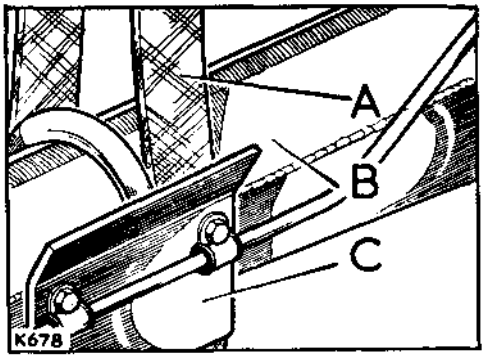


**Fig. E1-93. Check strap location**

A—Check strap
B—Rear axle
C—Shield for brake pipe

6. Fit the rear brake pipe to the axle case, connect the flexible pipe to the main pipe and secure the clipping. See Figs. E1-86, E1-87 and E1-88.
7. Fit the differential. Operation E1-13.
8. Fit the shock absorbers. Operation E1-7.
9. Fit the rear hubs and adjust the hub bearings Operations E1-5 and E1-4.
10. Fit the rear axle half shafts. Operation E1-2 or E1-3A, as applicable.
11. Replenish the rear axle lubricating oil. Operation E1-1 (E1-1A).
12. Bleed and adjust the brakes. (Section H).

## Rear axle assembly, to remove and refit—Operation E1-16

Workshop hand tools:
Spanner sizes: $\frac{3}{16}$ in. BSF, $\frac{9}{16}$ in. AF, $\frac{5}{8}$ in. AF, $\frac{11}{16}$ in. AF, $\frac{3}{4}$ in. AF open end
$\frac{7}{16}$ in. BSF, $\frac{9}{16}$ in. AF, $\frac{5}{8}$ in. AF, $\frac{13}{16}$ in. AF, $\frac{7}{8}$ in. AF sockets
Pliers, Screwdriver, Mallet

### To remove

1. Slacken the fixings at both rear road wheels.
2. Jack up the rear of the vehicle and support on stands.
3. Remove both rear road wheels.
4. Disconnect the rear propeller shaft and move it clear of the final drive unit.

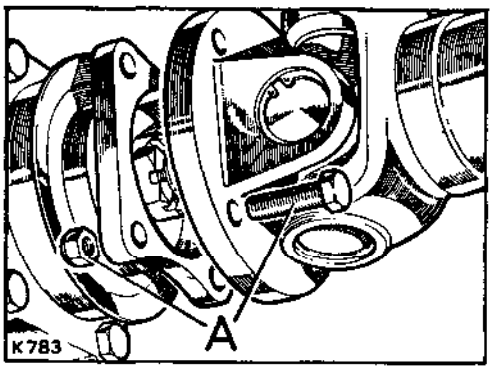


**Fig. E1-94. Propeller shaft for rear axle**

A—Fixings at coupling flanges

5. Disconnect the rear brake pipe at the connection with the flexible pipe and withdraw the flexible pipe from chassis bracket, then depress the brake pedal, and wedge it in that position, to prevent further leakage of brake fluid. When depressing the brake pedal take precautions to avoid fluid spillage.

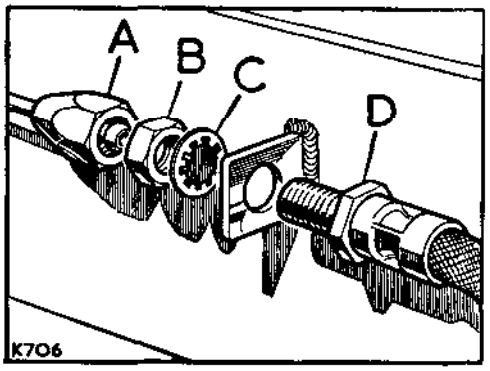


**Fig. E1-95. Rear brake pipe connection**

A—Pipe from master cylinder
B—Locknut
C—Shakeproof washer
D—Union and flexible brake pipe

6. Support the rear axle with a jack and disconnect one end of each check strap.

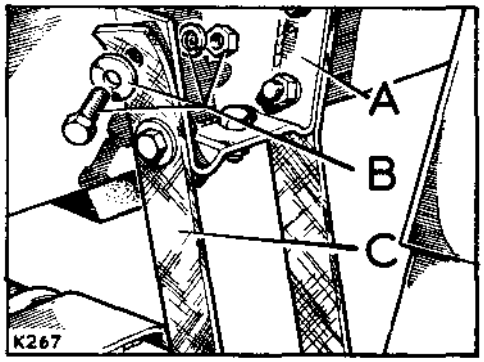


**Fig. E1-96. Check strap for axle**

A—Chassis
B—Fixings, check strap to chassis
C—Check strap

7. Remove both rear shock absorbers.

**Note:** If the shock absorber lower fixing is secured to the bottom plate for the axle 'U'-bolts, it can be left in place, but the upper fixing must be slackened to prevent damaging the mounting rubbers when pivoting the shock absorber and bottom plate clear of the road spring.

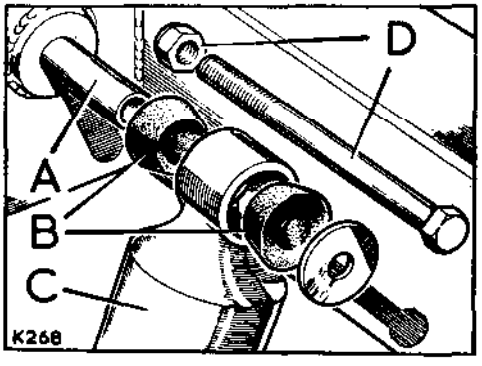


**Fig. E1-97. Shock absorber top fixings**

A—Chassis
B—Rubbers
C—Shock absorber
D—Fixings

## Operation E1-16—*continued*

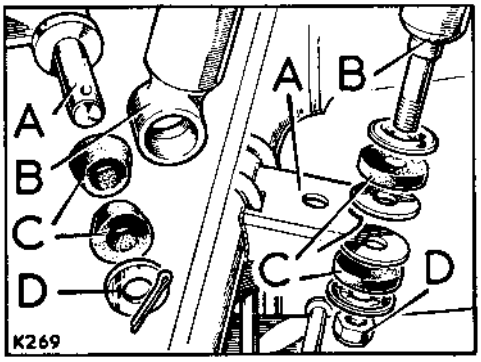


**Fig. E1-98. Shock absorber bottom fixings (alternative types in use)**

A—Chassis
B—Shock absorber
C—Rubbers
D—Fixings

8. Release the rear brake pipe clips from the shields at each end of the axle case.

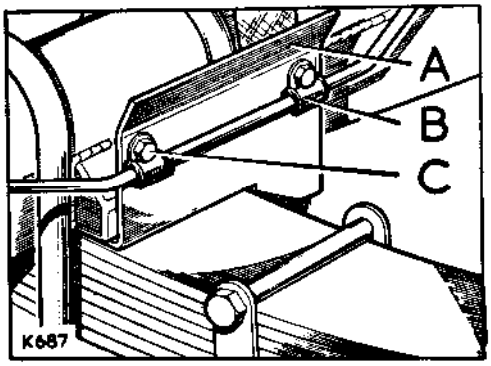


**Fig. E1-99. Brake pipe shield clips**

A—Shield for brake pipe
B—Clips, brake pipe to shield
C—Fixings, clips to shield

9. Remove the four 'U' bolts from the axle.

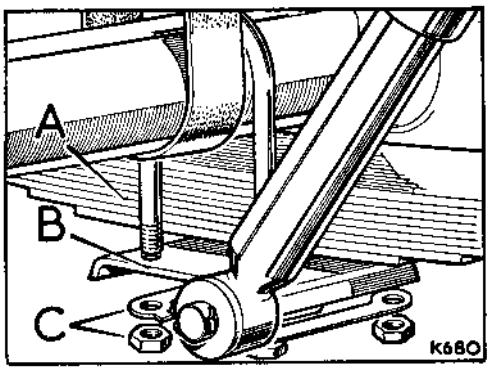


**Fig. E1-100. Axle 'U' bolts**

A—Road spring
B—Bottom plate
C—Fixings for 'U' bolts

10. Support the rear axle with a jack, slacken all six shackle pins at the rear road springs, then remove the two rear shackle pins, noting that they are threaded into the inner shackle plates.

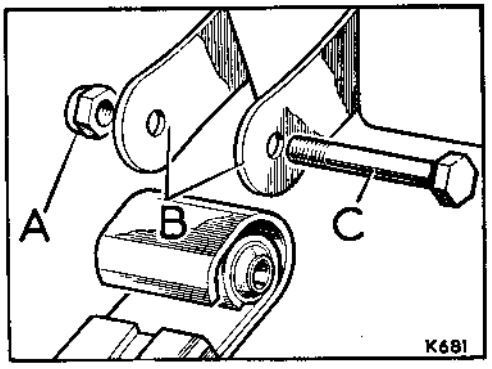


**Fig. E1-101. Rear fixings for road spring**

A—Self-locking nut
B—Shackle plates
C—Shackle pin

11. Lower the jack and withdraw the axle from under the vehicle.

## Operation E1-16—*continued*

**To refit**

1. Place the axle on a jack and position under the vehicle.
2. Using a second jack, raise each road spring in turn and connect the rear ends of the springs to the chassis, but DO NOT tighten the shackle pins and locknuts at this stage.
3. Lift each end of the axle in turn, and locate the brake pipe shields in place.

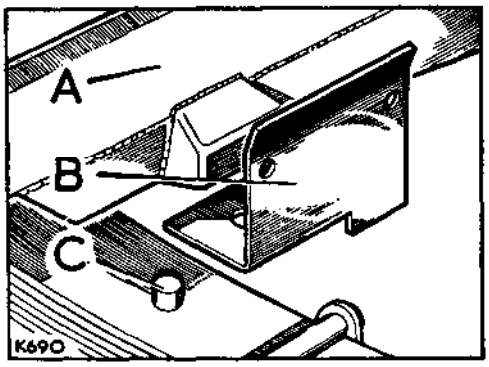


**Fig. E1-102. Brake pipe shield location**

A—Axle
B—Shield, with off-set toward centre of vehicle
C—Centre bolt for road spring

4. Fit the bottom plate and axle 'U' bolts and engage the lock plates.
5. Jack up the rear axle sufficient to fit the check straps.
6. Fit the rear shock absorbers.
7. Connect the rear brake pipe at the coupling with the flexible pipe. Secure the brake pipe clips to the shields.
8. Fit the rear propeller shaft.
9. Fit the rear road wheels.
10. Lower the vehicle to the ground and move vehicle bodily backward and forward to settle the springs. Tighten all six shackle pins and locknuts.

    **Note:** If the shackle pins and locknuts are tightened prior to lowering the vehicle to the ground, premature failure of the spring bushes will occur.
11. Check, and if necessary, replenish the rear axle lubricating oil. Operation E1-1 (E1-1A).
12. Bleed and adjust the brakes. (Section H.)

## Fault diagnosis—Rear axle and suspension

| Symptom | Possible cause | Investigation | Remedy |
|---|---|---|---|
| **Oil leaks** | Loose or missing drain and filler plugs | Check oil drain and filler plugs at differential | Fit new joint washers and tighten plugs |
| | Damaged joint washers | Determine point of leak and dismantle as necessary | Fit new joint washers with both sides smeared with general purpose grease |
| | Oil seals damaged or incorrectly fitted | Determine point of leak, see exploded view of axle for location of oil seals and dismantle as necessary | Fit new oil seal with 'Hylomar' SQ32M sealing compound smeared on the outside diameter |
| **Excessive tyre wear** | Incorrect tyre pressures | Check tyre pressures, see Section R | Adjust as necessary |
| | Eccentric wheels and tyres | Check tyre concentricity line, check wheel pressings for damage or distortion | Rectify or renew |
| | Harsh or unequal brakes | Check brake adjustment, Section H | Adjust as necessary |
| | Wheels cambered | Check for settled road springs, damage to rear suspension and axle unit | Fit new parts as required |
| | Failure to rotate tyres | | Change position of tyres, including spare, see Section R |
| | Fast cornering<br>Sustained high-speed driving | } | } In the hands of the operator |
| **Rear end noisy** | Hydraulic damper | Check damper mounting bushes for wear | Fit new bushes. If the damper itself is noisy, renew |
| | | Check hydraulic damping, Operation E1-7 | Fit new damper |
| | Looseness in rear suspension | Check all mountings for wear and security | Fit new parts as required, securely tighten mountings |
| | Hub bearings incorrectly adjusted or worn | Check bearings for wear and adjustment | Fit new bearings and/or adjust |
| | Differential lubrication level too low or incorrect grade | Check lubrication level and grade | Replenish with correct grade of lubricating oil, see Section X |
| | Differential worn | Remove differential and check | Overhaul differential |
| | Propeller shaft worn | | See Section D |

## GENERAL DATA

| | |
|---|---|
| **Axle type** | Fully floating |
| **Oil capacity:** | |
| With Rover type differential | 3 Imperial pints, 3½ US pints, 1,75 litres |
| With ENV type differential | 2⅝ Imperial pints, 3.1 US pints, 1,4 litres |
| **Hub bearing lubrication;** | |
| Early models | Oil—⅓ Imperial pint, 0,19 litres |
| Latest models | Grease |
| Final drive | Spiral bevel |
| Ratio | 4.7 : 1 |

## DETAIL DATA

| | |
|---|---|
| **Rear hub assembly:** | |
| Rear hub end-float | .004 in. to .006 in. (0,10 mm to 0,16 mm) |
| Clearance of hub bearings on hub bearing sleeve | .0002 in. to .0012 in. (0,005 mm to 0,030 mm) |
| Fit of hub inner bearing in hub | .001 in. to .003 in. (0,025 mm to 0,075 mm) interference |
| Fit of hub outer bearing in hub | .0005 in. to .0025 in. (0,030 mm to 0,0635 mm) interference |
| **Differential assembly** | |
| **Rover type:** | |
| Pinion teeth | 10 |
| Crown wheel teeth | 47 |
| Ratio | 4.7:1 |
| Backlash: crown wheel to pinion | .008 in. to .010 in. (0,20 mm to 0,25 mm) at the tightest point |
| Crown wheel bearing pre-load | .005 in. (0,12 mm) |
| Crown wheel run-out, maximum permitted when assembled | .004 in. (0,10 mm) |
| Bevel pinion bearing pre-load | 7 lb to 12 lb (3,2 kg to 4,5 kg) |
| Backlash: differential wheels to differential pinions | Minimum but definite backlash |
| Distance from crown wheel axis to pinion face | 3.000 in. to 3.002 in. (76,20 mm to 76,25 mm) |
| **ENV type:** | |
| Pinion teeth | 10 |
| Crown wheel teeth | 47 |
| Ratio | 4.7:1 |
| Backlash: crown wheel to pinion | .006 in. to .009 in. (0,15 mm to 0,23 mm) |
| Crown wheel bearing pre-load | .002 in. to .004 in. (0,05 mm to 0,10 mm) |
| Crown wheel run-out, maximum permitted when assembled | .003 in. (0,08 mm) |
| Bevel pinion bearing pre-load | 4½ lb to 9 lb (2 kg to 4 kg) |

**Road springs** (Refer to Section F for front road spring data)

| | Driver's side | Passenger's side |
|---|---|---|
| **88, Petrol, rear** | | |
| Number of leaves | 11 | 11 |
| Width of leaves | 2½ in. (63,5 mm) | 2½ in. (63,5 mm) |
| Static load (vehicle unladen) | 690 lb (313 kg) | 580 lb (263 kg) |
| Camber under static load | 3¼ in. (82,6 mm) | 3¼ in. (82,6 mm) |
| Free camber | 7.42 in. (188,5 mm) | 6.75 in. (171,5 mm) |
| **88, Diesel, rear** | | |
| Number of leaves | 11 | 11 |
| Width of leaves | 2½ in. (63,5 mm) | 2½ in. (63,5 mm) |
| Static load (vehicle unladen) | 690 lb (313 kg) | 580 lb (263 kg) |
| Camber under static load | 3¼ in. (82,6 mm) | 3¼ in. (82,6 mm) |
| Free camber | 7.42 in. (188,5 mm) | 6.75 in. (171,5 mm) |
| **109, Petrol, rear** | | |
| Number of leaves | 10 | 10 |
| Width of leaves | 2½ in. (63,5 mm) | 2½ in. (63,5 mm) |
| Static load (vehicle unladen) | 1020 lb (463 kg) | 860 lb (390 kg) |
| Camber under static load | 2 in. (50 mm) | 2 in. (50 mm) |
| Free camber | 9¼ in. (235 mm) | 8.2 in. (208 mm) |
| **109, Diesel, rear** | | |
| Number of leaves | 10 | 10 |
| Width of leaves | 2½ in. (63,5 mm) | 2½ in. (63,5 mm) |
| Static load (vehicle unladen) | 1020 lb (463 kg) | 860 lb (390 kg) |
| Camber under static load | 2 in. (50 mm) | 2 in. (50 mm) |
| Free camber | 9¼ in. (235 mm) | 8.2 in. (208 mm) |

**Hydraulic dampers:**

| | |
|---|---|
| Type | Telescopic, double acting |
| Mounting | Rubber bushes |

# SECTION F—FRONT AXLE AND SUSPENSION

# INDEX—FRONT AXLE AND SUSPENSION

**Note:** A comprehensive, detailed Index is included at the end of this manual


| Description | Operation Number |
|---|---|
| Exploded views and description | At beginning of Section |
| **WHEEL HUBS** | |
| Bearing adjustment | 3 |
| Brake anchor plate | 4 |
| Driving member for hub | 6 and 7 |
| Hub and bearings | 4 and 5 |
| Lubrication | 1 |
| Oil seal for driving member | 7 |
| Oil seal for hub bearings | 5 |
| Stub axle | 4 and 5 |
| **SWIVEL PIN HOUSINGS** | 9 and 10 |
| Lubrication | 1 |
| Oil seal for swivel pin housing | 8 |
| Swivel pins, bush and bearing | 10 |
| **FRONT SUSPENSION** | |
| Bump stop rubber | 14 |
| Road springs | 12 and 13 |
| Shackle pins and bushes | 12 and 13 |
| Shock absorbers | 11 |
| **DIFFERENTIAL** | 16–17 |
| Crown wheel and pinion | 17 (See Section E) |
| Differential | 17 (See Section E) |
| Lubrication | 1 |
| Oil seal for bevel pinion case | 15 (See Section E) |
| **FRONT AXLE** | |
| Axle assembly | 19 |
| Axle case | 18 |
| Breather for axle case | 18 |
| Half shafts | 6 and 7 |
| Lubrication | 1 |
| Oil seal for half shafts | 7 and 18 |
| Steering stop adjustment | 2 |
| **FAULT DIAGNOSIS** | At end of Section |
| **DATA** | At end of Section |

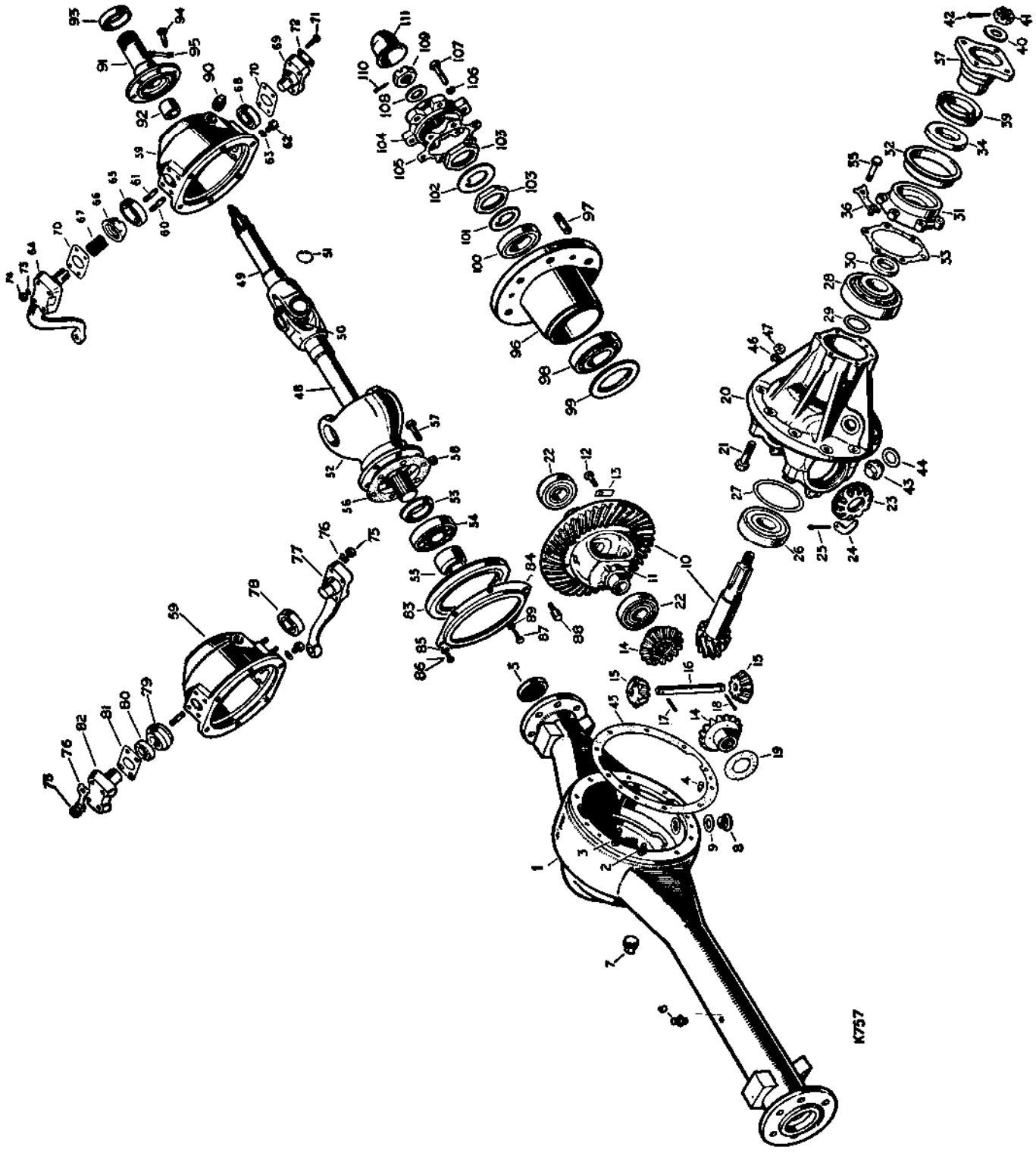


**Fig. F1-1. Exploded view of front axle**

**Key to Fig. F1-1. Exploded view of front axle**

1 Axle casing complete
2–3 Fixings, bevel pinion housing to axle casing
4 Dowel, locating housing
5 Oil seal, in casing
6 Breather
7 Oil filler plug
8–9 Drain plug and joint washer
10 Crownwheel and bevel pinion
11 Differential casing
12 Set bolt
13 Locker (double type)
14 Differential wheel
15 Differential pinion
16 Spindle for pinion
17 Plain pin } For
18 Split pin } spindle
19 Thrust washer
20 Bevel pinion housing
21 Special bolt, fixing bearing cap
22 Taper roller bearing for differential
23–24 Bearing adjustment
25 Split pin, fixing lock tab
26 Bearing for bevel pinion, pinion end
27 Shim, bearing adjustment, pinion end
28 Bearing for bevel pinion, flange end
29 Shim, bearing adjustment, flange end
30 Washer for pinion bearing
31 Retainer for oil seal
32 Mudshield for retainer
33 Joint washer for oil seal retainer
34 Oil seal for pinion
35–36 Fixings, oil seal retainer
37 Driving flange
39 Mudshield for driving flange
40–42 Fixings for flange
43–44 Oil filler plug and joint washer
45 Joint washer, differential to axle casing
46–47 Fixings, differential to axle casing
48 Half shaft
49 Stub shaft
50 Journal assembly
51 Circlip for journal
52 Housing for swivel pin bearing
53 Distance piece for bearing
54 Bearing for half shaft
55 Retaining collar for bearing
56 Joint washer for housing
57–58 Fixings, housing to front axle casing
59 Housing assembly for swivel pin
60 Special stud for steering lever and bracket
61 Stud for steering lever
62–63 Drain plug and joint washer
64 Swivel pin and steering lever
65 Cone seat for swivel pin, top } early type
66 Cone bearing for swivel pin, top } early type
67 Spring for cone bearing
68 Bearing for swivel pin, bottom
69 Swivel pin and bracket
70 Shim, for swivel pin bearing
71–74 Fixings, swivel pin to swivel pin housings
75–76 Fixings, swivel pins to swivel pin housings
77 Swivel pin and steering lever
78 Bearing for bottom swivel pin } latest type
79 Bush for top swivel pin } latest type
80 Thrust washer for bush
81 Shim for top swivel pin
82 Swivel pin and bracket
83 Oil seal for swivel pin bearing housing
84 Retainer for oil seal
85–89 Fixings, retainer and lock stop plate to swivel pin housing
90 Oil filler plug for swivel pin housing
91 Stub axle assembly
92 Bush for driving shaft, early models only
93 Distance piece for inner bearing
94–95 Fixings, stub axle to swivel pin housing
96 Front hub assembly
97 Stud for road wheel
98 Bearing for front hub, inner
99 Oil seal for inner bearing
100 Bearing for front hub
101 Keywasher } Fixing
102 Locker } front hub
103 Special nut } bearing
104 Driving member for front hub
105 Joint washer for driving member
106–107 Fixings, driving member to front hub
108 Plain washer } Fixing
109 Slotted nut } driving member
110 Split pin } to
111 Hub cap, front } driving shaft

## Lubrication, front axle (differential, swivel pin housings and hubs)—Operation F1-1

Workshop hand tools:
Spanner sizes: $\frac{7}{16}$ in. BSF, $\frac{1}{2}$ in. AF, $\frac{9}{16}$ in. AF open end

### Hubs

Front hub lubrication is exactly the same as described for the rear, Section E, Operation E1-1.

### Differential

### To drain

1. Place a suitable container beneath the differential.
2. Remove the drain plug and allow all oil to drain, then replace the plug complete with joint washer.

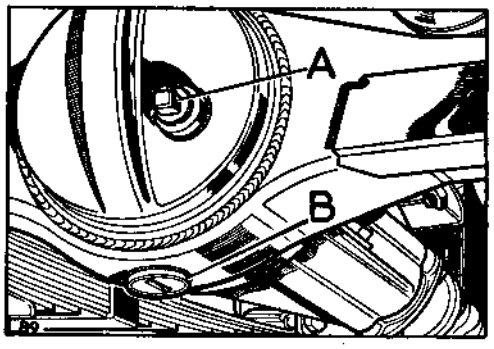


**Fig. F1-2. Oil filler and drain plugs**

A—Oil filler/level plug
B—Drain plug

**Note:** The plug fitted at the rear of the front axle should be disregarded.

### To refill or top-up

1. Remove the oil filler/level plug.
2. Using the correct grade oil, see Section X, fill the differential to the bottom of the filler plug hole.
3. Fit the oil filler/level plug complete with joint washer.

### Capacity

3 Imperial pints; 3½ US pints; 1,7 litres.

### Swivel pin housings

### To drain

1. Place a suitable container beneath the swivel pin housing.
2. Remove the drain plug and allow all oil to drain, then replace the plug complete with joint washer.

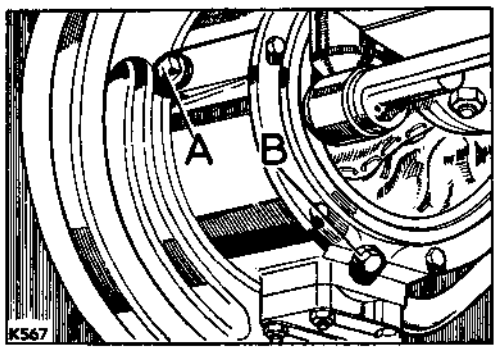


**Fig. F1-3. Oil filler and drain plugs**

A—Oil filler/level plug
B—Drain plug

### To fill or top-up

1. Remove the oil filler/level plug.
2. Using the correct grade of oil, see Section X, fill the swivel pin housing to the bottom of the filler plug hole.
3. Fit the oil filler/level plug.

### Capacity

1 Imperial pint; 1.2 US pints; 0,5 litre.

## Steering lock stop, to adjust—Operation F1-2

Workshop hand tools:
Spanner sizes: $\frac{7}{16}$ in. AF open end

**To adjust**

1. Slacken the stop bolt locknuts.
2. Adjust the stop bolts so that the distance from the head of the bolt to the face of the oil seal retainer is $\frac{1}{2}$ in. (12,5 mm).
3. Tighten the locknuts.
4. Check the steering at full lock, and ensure that the road wheel tyres do not foul any chassis components.

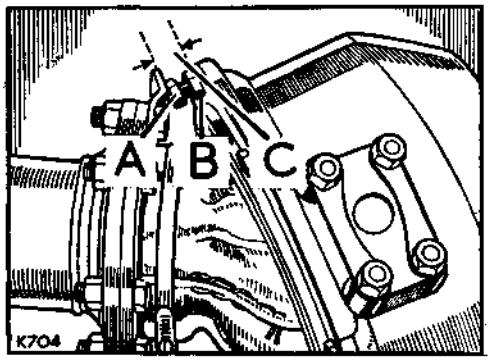


**Fig. F1-4. Adjusting the lock stop bolt**

A—Lock stop bolt
B—Locknut
C—Distance between head of bolt and oil seal retainer—$\frac{1}{2}$ in. (12,5 mm)

## Hub bearings, to adjust—Operation F1-3

*(For removal, refitting and overhaul instructions, Operations* F1-4 *and* F1-5 *refer)*

Workshop hand tools:
Spanner sizes: $\frac{3}{8}$ in. BSF, $\frac{5}{8}$ in. BSF
Pliers, Screwdriver

Special Tools:
Spanner for hub bearing nuts,
Part No. 606435
(see Section Z for illustration)

### To adjust

1. Slacken the fixings at the front road wheel.
2. Jack up the front of the vehicle.
3. Remove the front road wheel.
4. Fully slacken the front brake shoe adjusters to ensure that the brake linings are clear of the drum.

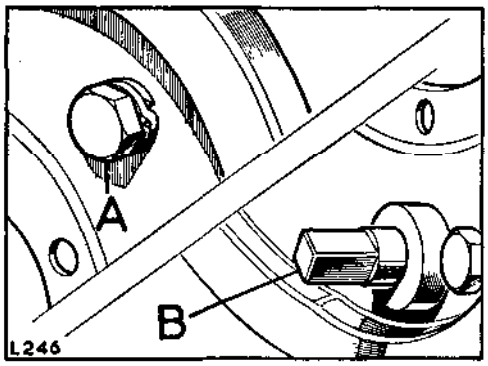


**Fig. F1-5. Front brake shoe adjuster (two variations in use)**

A—Snail cam type
B—Fulcrum type

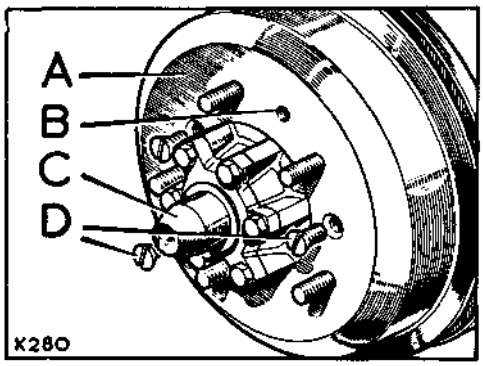


**Fig. F1-6. Removing brake drum**

A—Brake drum
B—Extractor hole
C—Hub
D—Fixings, drum to hub

5. Remove the front brake drum.
   **Note:** If any difficulty is experienced in withdrawing the brake drum, fit one of the drum fixing screws into the extractor hole, and tighten the screw while using a mallet to dislodge the drum.
6. Prise off the hub cap.
7. Remove the driving member from the axle stub shaft and hub.

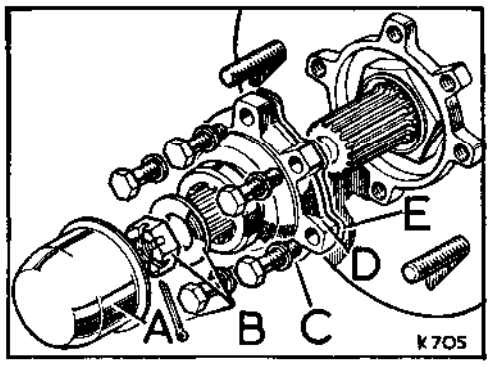


**Fig. F1-7. Driving member for hub**

A—Hub cap
B—Fixings, driving member to axle stub shaft
C—Fixings, driving member to hub
D—Driving member
E—Joint washer

8. Remove the locknut and washer from the hub.

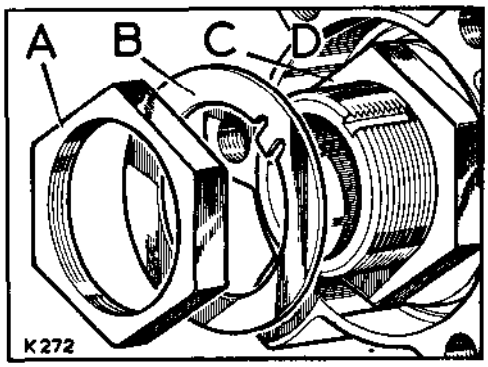


**Fig. F1-8. Hub bearing fixings**

A—Locknut
B—Lockwasher
C—Nut for bearing adjustment
D—Hub

## Operation F1-3—*continued*

9. Spin the hub vigorously, causing the bearing rollers to settle in the tapered races, producing maximum end-float conditions.
10. Tighten the adjuster nut sufficient only, to take up any obvious end-float.

    **Note:** It is necessary to spin the hub every time before checking the end-float, as moving the hub laterally will resettle the rollers, affecting the measurable end-float.
11. Fit the lockwasher and nut, tighten the nut but do not engage the lockwasher.
12. Using a dial test indicator, check the end-float of the hub, which must be .004 in. to .006 in. (0,10 mm to 0,15 mm).

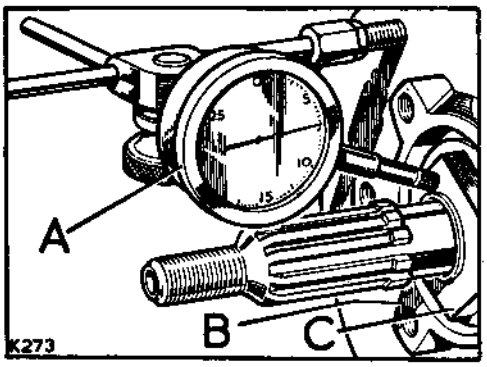


**Fig. F1-9. Checking hub end-float**

A—Dial test indicator
B—Hub
C—Bearing locknut

13. If the hub end-float is not within the permitted limits, remove the locknut and washer, and readjust the inner nut. Fit the lockwasher, tighten the locknut and recheck the end-float.
14. When the end-float is correct, engage the lockwasher.
15. Using a new joint washer and felt oil seal, fit the driving member to the hub and stub shaft, ensuring that the oil seal is fitted with the rubber side facing outward. Tighten the driving member securing bolts to a torque figure of 28 lb ft (3,9 mkg). Tighten the stub shaft securing nut to a torque figure of 10 lb ft to 15 lb ft (1,4 mkg to 2,0 mkg) and secure with a new split pin.
16. Complete the reassembly by reversing the removal procedure.
17. Adjust the brakes. (Section H).
18. If the hubs are oil lubricated, replenish the lubricating oil. Operation F1-1.

## Front hubs, brake anchor plate and stub axle, remove and refit—Operation F1-4

*(For overhaul instructions, Operation F1-5 refers)*

Workshop hand tools:

Spanner sizes: $\frac{1}{4}$ in. BSF, $\frac{7}{16}$ in. BSF, $\frac{9}{16}$ in. AF, $\frac{5}{8}$ in. AF open end, $\frac{3}{8}$ in. BSF, $\frac{5}{8}$ in. BSF
Pliers, Screwdriver (large)

Special tools:

Spanner for hub bearing nuts, Part No. 606435 (see Section Z for illustration)

### To remove front hub

1. Drain the lubricating oil from the swivel pin housing. Operation F1-1.
2. Slacken the fixings at the front road wheels.
3. Jack up the front of the vehicle and remove the front road wheels.
4. Fully slacken the front brake shoe adjusters to ensure that the brake linings are clear of the drum.

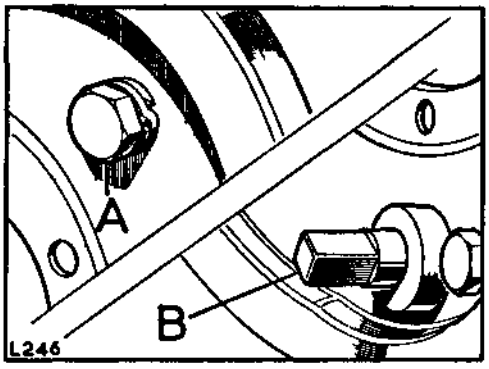


**Fig. F1-10. Front brake shoe adjuster (two variations in use)**

A—Snail cam type
B—Fulcrum type

5. Remove the front brake drum.

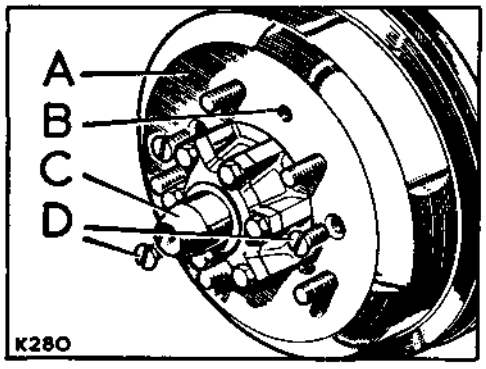


**Fig. F1-11. Removing brake drum**

A—Brake drum
B—Extractor hole
C—Hub
D—Fixings, drum to hub

**Note:** If any difficulty is experienced in withdrawing the brake drum, fit one of the drum fixing screws into the extractor hole, and tighten the screw while using a mallet to dislodge the drum.

6. Prise off the hub cap.
7. Remove the driving member from the axle stub shaft and the hub.

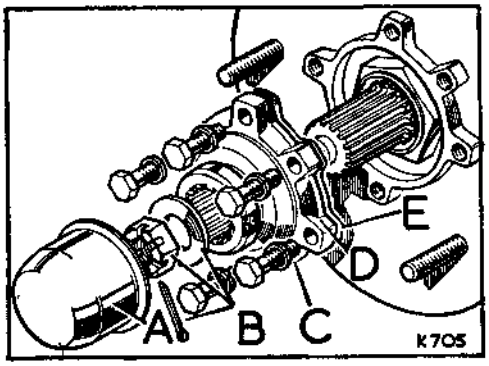


**Fig. F1-12. Driving member for hub**

A—Hub cap
B—Fixings, driving member to axle stub shaft
C—Fixings, driving member to hub
D—Driving member
E—Joint washer

8. Remove the front hub fixings.

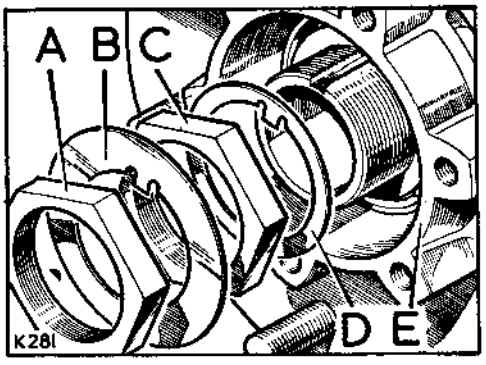


**Fig. F1-13. Hub bearing fixings**

A—Locknut B—Lock washer
C—Adjuster nut D—Key washer
E—Hub

## Operation F1-4—*continued*

9. Hold the outer roller bearing in position and withdraw the hub and bearing assembly complete.

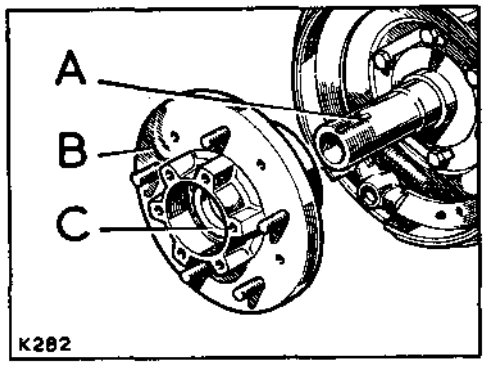


**Fig. F1-14. Removing front hub and bearing assembly**

A—Stub axle
B—Hub
C—Outer bearing for hub

### To remove brake anchor plate and stub axle

10. Disconnect the front brake pipe at the connection with the flexible pipe, one each side of the vehicle, and withdraw the flexible pipe from the chassis bracket. Then, depress the brake pedal and wedge it in that position, to prevent further leakage of brake fluid. When depressing the brake pedal, take precautions to avoid fluid spillage.

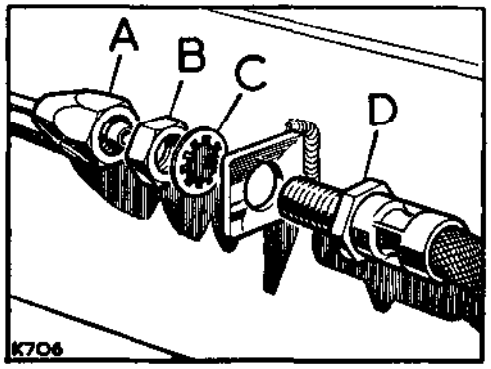


**Fig. F1-15. Front brake pipe connection**

A—Pipe from master cylinder
B—Locknut
C—Shakeproof washer
D—Flexible brake pipe

11. Remove the brake anchor plate and withdraw the stub axle.

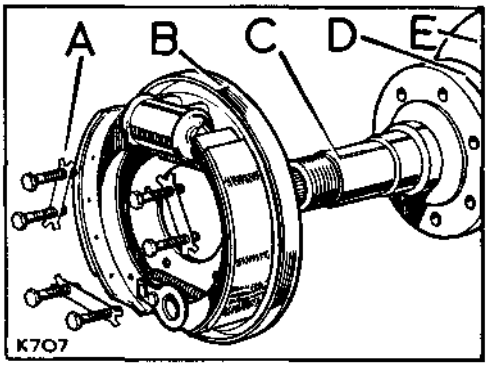


**Fig. F1-16. Front brake anchor plate and stub axle** (typical brake plate illustrated)

A—Fixings, brake anchor plate and stub axle to swivel pin housing
B—Brake anchor plate
C—Stub axle
D—Joint washer
E—Swivel pin housing

### To refit stub axle and brake anchor plate

1. Smear both sides of the joint washer with general purpose grease, and place it in position on the rear face of the stub axle.
2. Position the stub axle, with the keyway at the top, on the swivel pin housing, then fit the brake anchor plate with the brake hose connection at the top. Ensure that the cut-away in the lock plates face inward.

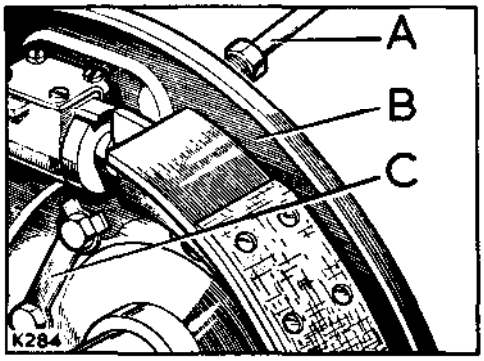


**Fig. F1-17. Fitting brake anchor plate**

A—Brake hose connection at top
B—Brake anchor plate
C—Cut away side of lockwasher facing inward

## Operation F1-4—*continued*

3. Connect the front brake pipes at the coupling with the flexible pipes.

**To refit front hub**

4. Hold the outer roller bearing in position and slide the hub and bearing assembly on to the bearing sleeve.
5. Fit the key washer and bearing adjusting nut, then adjust the bearing end-float. Operation F1-3.
6. Complete the reassembly by reversing the removal procedure ensuring that the felt oil seal for the hub driving member is fitted with the rubber side facing outward.

   Tighten the driving member securing bolts to a torque figure of 28 lb ft (3,9 mkg). Tighten the stub shaft securing nut to a torque figure of 10 lb ft to 15 lb ft (1,4 mkg to 2,0 mkg) and secure with a new split pin.
7. Bleed and adjust the brakes.
8. Replenish the front axle and swivel pin housing lubricating oil. Operation F1-1.

## Front hubs and stub axles, overhaul—Operation F1-5

*(For removal and refitting Instructions, Operation F1-4 refers)*
*(For overhaul of brake anchor plate, Section H refers)*

Workshop hand tools:
Screwdriver (medium), Mallet

### To dismantle

1. Withdraw the outer roller bearing.
2. Prise out the oil seal and withdraw the inner roller bearing.

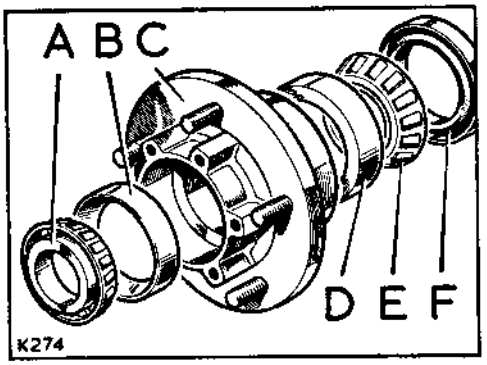


**Fig. F1-18. Front hub and bearings**
A—Outer roller bearing
B—Outer race for outer bearing
C—Hub
D—Outer race for inner bearing
E—Inner roller bearing
F—Oil seal

3. Press the bearing outer races from the hub.
4. If it is required to remove the inner bearing distance piece from the stub axle, it must be shattered, using extreme care to avoid damaging the axle.

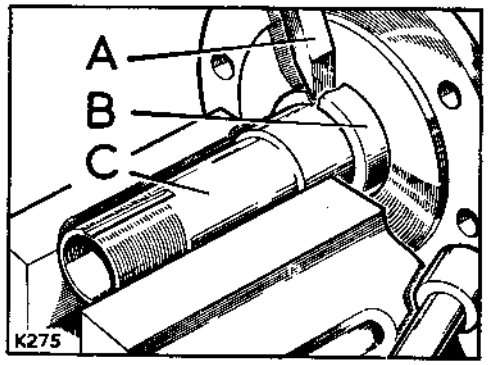


**Fig. F1-19. Removing inner bearing distance piece**
A—Use chisel to shatter
B—Distance piece (shattered)
C—Sleeve for hub bearings

### Inspection

1. Examine all components for obvious wear or damage.

2. Check the outside diameter of the inner bearing distance piece, this must not show any signs of damage or roughness as it forms the inner seat for the oil seal. The distance piece should be a *press fit* on the stub axle. Any clearance between these two parts will allow oil to leak past on to the brake linings.

3. The hub bearings must be a press fit in the hub and a sliding fit on the stub axle.

   **Note:** Early stub axles are fitted with a bush at the inner end, which is reamered, after fitting, to 1.250 in. +.004 in. (31,75 mm +0,10 mm). If the bush is worn or damaged, a new replacement should be fitted and reamered in position.
   Latest type stub axles are of a strengthened design and are not fitted with a bush. The stub axle and half shaft should be examined for wear or damage, and replacements made accordingly.
   The latest type stub axle is interchangeable with the early type, deleting the bush.

### To assemble

1. Press the bearing outer races, wide side first, into the hub, ensuring that they abut the locating shoulders.

2. Using the correct grade of grease, see Section X, fully pack the inner roller bearing and place it in its outer race.

3. Smear the outside diameter of the oil seal with jointing compound, and press it into the hub, lipped side inward, until it is flush with the rear face of the hub. DO NOT press the seal below the rear face of the hub, or it may fail to locate its inner seat correctly, resulting in an oil leak which could contaminate the brake linings.

4. Pack the centre of the hub with the correct grade of grease, leaving sufficient space for the bearing sleeve.

## Operation F1-5—*continued*

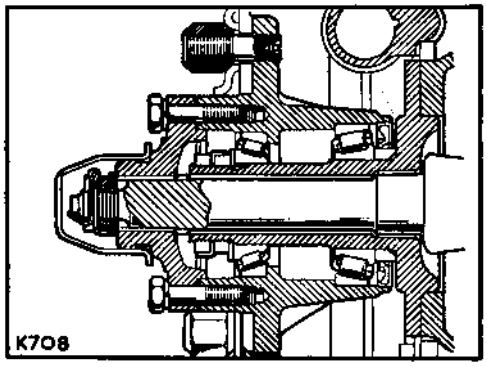


**Fig. F1-20. Cross-section of front hub**

5. Fully pack the outer roller bearing with the correct grade of grease, and place it in its outer race.

   **Note:** When fitting the hub to the axle, ensure that the axle case breather is clear (see Operation F1-18), a blocked breather could cause failure of the oil seal fitted in the hub.

## Axle half shaft complete, remove and refit—Operation F1-6

*(For overhaul instructions, Operation F1-7 refers)*

Workshop hand tools:
Spanner sizes: $\frac{1}{4}$ in. BSF, $\frac{7}{16}$ in. BSF, $\frac{7}{16}$ in. AF, $\frac{5}{8}$ in. AF open end
$\frac{3}{8}$ in. BSF, $\frac{5}{8}$ in. BSF, 2 in. AF sockets

### To remove

1. Drain the lubricating oil from the front axle and swivel pin housing. Operation F1-1.
2. Remove the front hub, brake anchor plate, and stub axle. Operation F1-4.

   **Note:** To avoid the necessity of bleeding the brakes on reassembly, DO NOT disconnect the brake pipes, after removing the anchor plate fixings, suspend the plate without straining the flexible pipe.
3. Withdraw the axle half shaft complete.

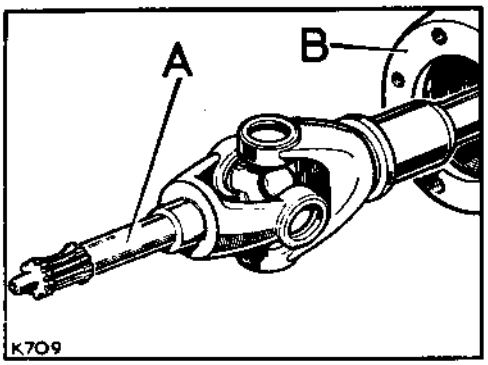


**Fig. F1-21. Axle half shaft**

A—Axle half shaft complete
B—Swivel pin housing

### To refit

1. Using extreme care to avoid damaging the oil seal in the end of the axle case, fit the axle half shaft, long end first, into the swivel pin housing and axle case, carefully engaging the splines on the half shaft into the final drive unit.
2. Rotate the axle half shaft and check that there is a minimum clearance of .050 in. (1,2 mm) between the stub and half shaft yoke ears and the swivel pin end faces. Carry out this check at the top and bottom swivel pins when the yokes are at an angle, with the chamfered radius closest to the swivel pin end face.

   If the clearance is insufficient, increase the chamfer on the radius of the yokes.

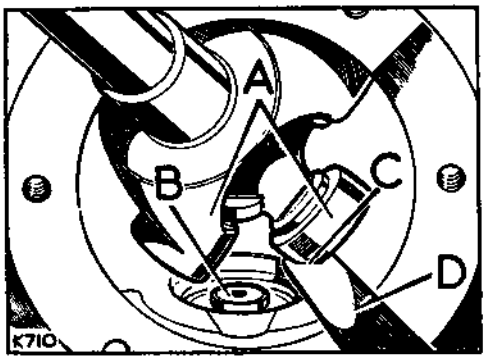


**Fig. F1-22. Checking clearance between half shaft yokes and swivel pins**

A—Half shaft yokes
B—Boctom swivel pin
C—Chamfered yoke radius
D—Feeler gauges .050 in. (1,2 mm) minimum

3. Fit the stub axle, brake anchor plate and front hub. Operations F1-4 and F1-3.
4. Replenish the front axle lubricating oil. Operation F1-1.
5. Bleed and adjust the brakes. (Section H).

## Axle half shaft complete, to overhaul—Operation F1-7

*(For removal and refitting instructions, Operation F1-6 refers)*

Workshop hand tools:
Circlip pliers, Mallet, Brass drift

Special tools:
Hub removal tool and adaptor kit, Part No. 275870

### To dismantle universal joint

1. Remove the circlips from the universal joint.

2. With one of the stub shaft yoke lugs uppermost tap the radius of the yoke lightly with a soft-nosed mallet.

   The top bearing should then begin to emerge from the yoke.

3. Turn the joint over and withdraw the bearing.

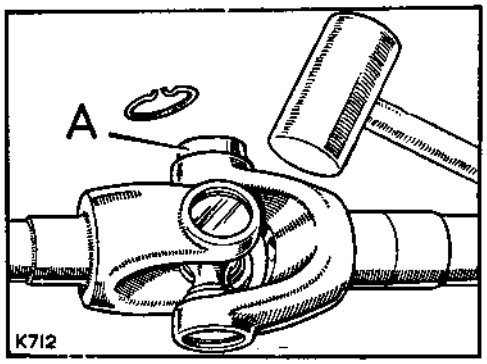


**Fig. F1-23. First stage of yoke bearing removal**

A—Bearing emerging

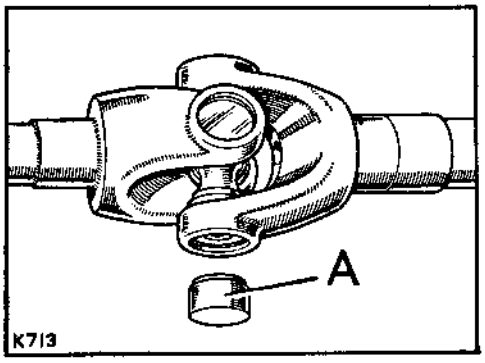


**Fig. F1-24. Second stage of yoke bearing removal**

A—Bearing withdrawn

   Always remove a bearing downwards, to avoid dropping the needle rollers.

4. Repeat the foregoing operations for the opposite bearing.

5. Part the stub shaft from the spider journals.

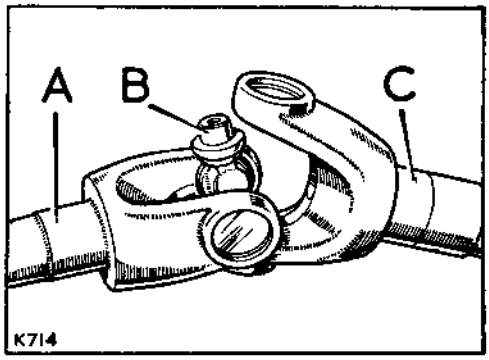


**Fig. F1-25. Removing the stub shaft**

A—Stub shaft
B—Journal C—Half shaft

6. Remove the half shaft bearings in the same manner as already described for the stub shaft.

### To dismantle half shaft

1. Using special tool, hub removal tool and adaptor kit, Part No. 275870, clamp the extractor firmly in a vice.

2. Position the appropriate adaptors on the end of the axle shaft and insert into the extractor.

3. Secure the shaft to the extractor, using adaptor No. 5.

4. The shaft may now be forced out of the collar by screwing in the ram.

## Operation F1-7—*continued*

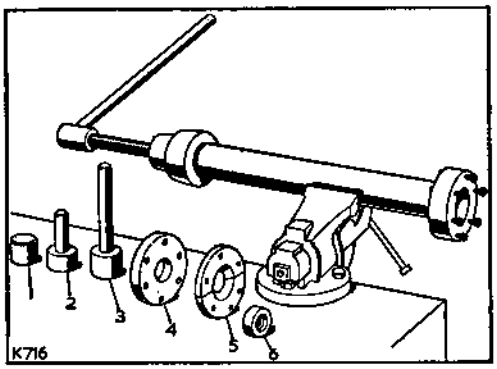


**Fig. F1-26. Hub removal tool and adaptor kit (Part No. 275870)**

5. After removal, discard the retaining collar. Use a new collar on assembly.

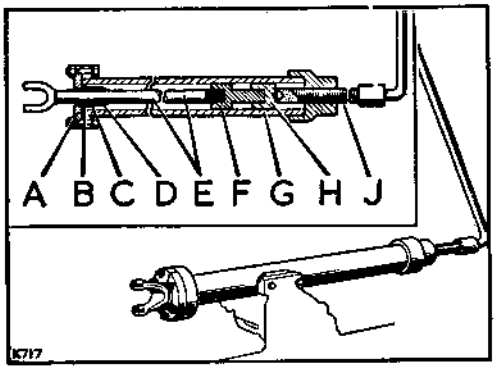


**Fig. F1-27. Using special tool, Part No. 275870, to dismantle axle half shaft**

A—Adaptor No. 5
B—Conical distance piece
C—Bearing inner race
D—Retaining collar
E—Axle half shaft
F—Adaptor No. 2 or 3, as applicable
G—Hub removal tool
H—Adaptor No. 1
J—Ram

### Inspection

1. Examine all components for obvious wear or damage.
2. If the journal or bearings for the universal joint show any signs of wear, load markings or distortion, they must be renewed complete.
3. The bearing races should be a light drive fit in the yoke trunnions.
4. In the event of wear taking place in any of the four yoke cross holes, rendering them oval, a new stub shaft or half shaft must be fitted.
5. The bearing inner race must be a light press fit on the axle half shaft.

### To assemble half shaft

1. Fit the **conical** distance piece over the half shaft with the internal chamfer to the radius on the shaft.
2. Place the roller race inner member and a **new** retaining collar over the half shaft with the chamfer towards the splined end; stand the shaft on end on a block of hard wood.
3. Bolt adaptor No. 4 to the tool with the recess towards the collar.

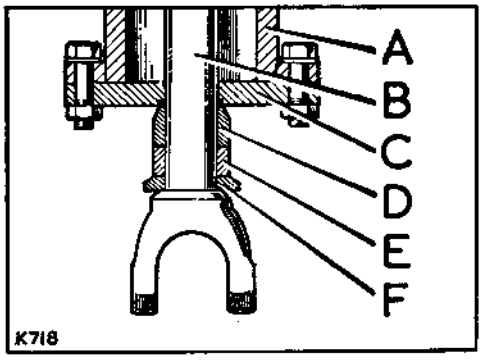


**Fig. F1-28. Special tool, Part No. 275870, assembled to axle half shaft**

A—Hub removal tool
B—Axle half shaft
C—Adaptor No. 4
D—Retaining collar
E—Bearing inner race
F—Conical distance piece

## Operation F1-7—*continued*

4. The weight of the extractor is such that it may now be used as a ram to drive the collar on to the shaft.

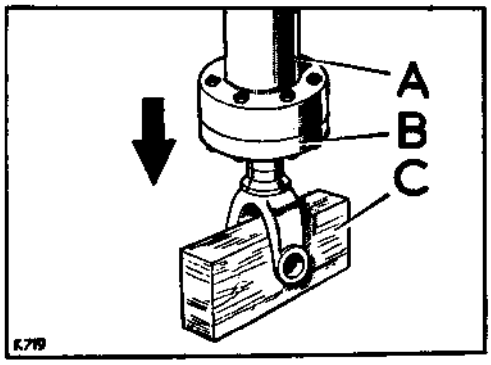


**Fig. F1-29. Extractor used as a ram to drive collar on to axle shaft**

A—Extractor (hub removal tool)
B—Adaptor
C—Hardwood block

### To assemble universal joint

1. Assemble the needle rollers in the bearing races, if necessary using a smear of vaseline to retain them in place.
2. Insert the journal in the stub shaft yoke holes, and using a brass drift slightly smaller in diameter than the hole in the yoke, lightly tap the first bearing into position, and retain with a circlip.

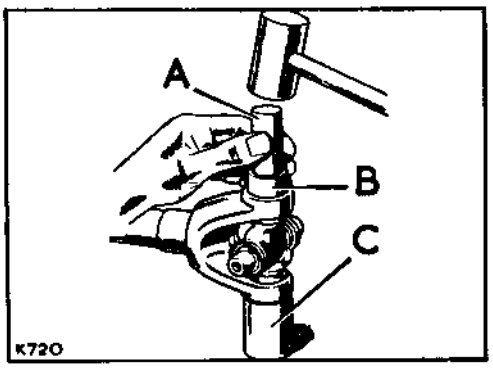


**Fig. F1-30. Replacing a yoke bearing**

A—Brass drift B—Yoke bearing
C—Support

3. Repeat the foregoing operations for the other three bearings.
4. Ensure that all four circlips are firmly located in their grooves.
5. Check that the universal joint moves freely. If the joint appears to bind, hold one shaft so that the joint hangs free and tap the yoke ears lightly with a mallet.

## Oil seals for swivel pin housing and axle case, remove and refit—Operation F1-8

*(For overhaul instructions, Operation F1-10 refers)*

Workshop hand tools:
Spanner sizes: $\frac{1}{4}$ in. BSF, $\frac{3}{8}$ in. BSF, $\frac{7}{16}$ in. BSF, $\frac{7}{16}$ in. AF, $\frac{9}{16}$ in. AF, $\frac{5}{8}$ in. AF open end
Screwdriver (medium), Pliers

Special tools:
Extractor for steering ball joints, Part No. 600590

### To remove

1. Drain the lubricating oil from front axle and swivel pin housing. Operation F1-1.
2. Slacken the fixings at the front road wheel.
3. Jack up the front of the vehicle and remove the road wheel.
4. Disconnect the front brake pipe at the connection with the flexible pipe, one each side of the vehicle, and withdraw the flexible pipe from the chassis bracket. Then, depress the brake pedal and wedge it in that position, to prevent further leakage of brake fluid. When depressing the brake pedal, take precautions to avoid fluid spillage.

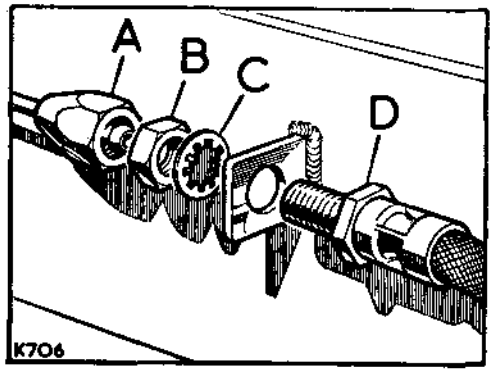


**Fig. F1-31. Front brake pipe connection**
A—Pipe from master cylinder
B—Locknut
C—Shakeproof washer
D—Flexible brake pipe

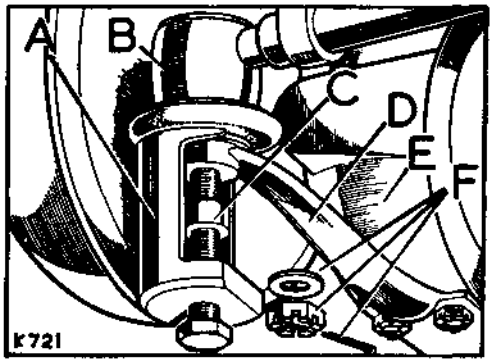


**Fig. F1-32. Steering track rod and drag link connections**
A—Special tool, Part No. 600590
B—Ball joint
C—Thread protection cap, part of 600590
D—Steering lever
E—Swivel pin housing
F—Fixings, ball joint to steering lever

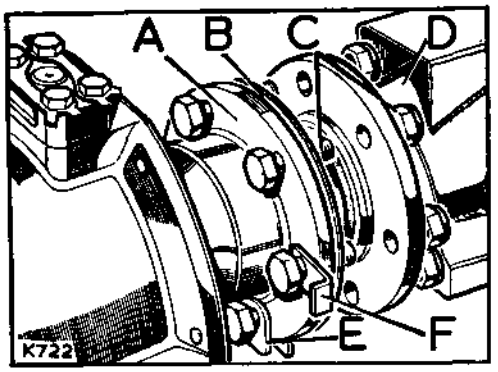


**Fig. F1-33. Swivel pin to axle case location**
A—Swivel pin housing
B—Joint washer
C—Fixings, swivel pin housing to axle case
D—Axle case
E—Location stop for jack (RH side only)
F—Lock stop plate

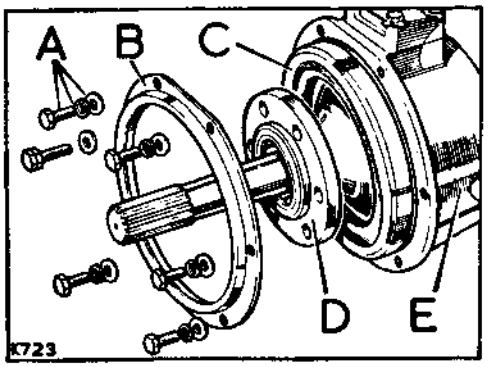


**Fig. F1-34. Oil seal for swivel pin housing**
A—Fixings (6 off) oil seal retainer to swivel pin housing
B—Oil seal retainer
C—Oil seal
D—Swivel pin bearing housing
E—Swivel pin housing

## Operation F1-8—*continued*

5. Disconnect the steering drag link and track rod as applicable, using special tool, Part No. 600590 to extract the ball joints.

6. Remove the fixings between the swivel pin housing and the axle case, noting the steering lock stop plate, and on the right-hand side only, the jack location stop plate.

7. Withdraw the swivel pin housing, axle half shaft and front hub assembly complete.

8. Remove the oil seal retainer from the swivel pin housing.

9. Prise the oil seal from the swivel pin housing.

10. Prise the oil seal from the axle case.

### To refit

1. Pack the swivel pin housing oil seal with heavy grease, and fit the oil seal and its retainer to the swivel pin housing, locating the steering stop adjustment bolt in the forwardmost hole.

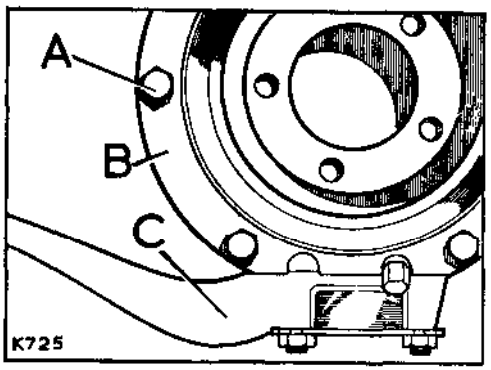


**Fig. F1-35. Location of steering stop adjustment bolt**

A—Bolt for steering stop adjustment
B—Retainer for oil seal
C—Steering lever

2. Check that the oil seal wipes the full surface of the bearing housing and adjust the position, if necessary, by slackening off the retaining bolts and resetting the seal.

3. Smear jointing compound on the outside diameter of the oil seal for the axle case. Fit the oil seal, lipped side inward, into the axle case, flush with the recessed end.

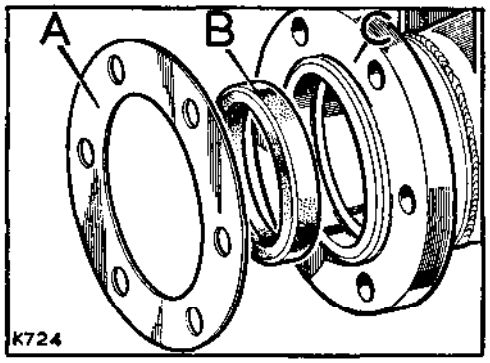


**Fig. F1-36. Oil seal and joint washer for axle case**

A—Joint washer B—Oil seal
C—Axle case

4. Smear both sides of the joint washer with general purpose grease and place it in position on the axle case.

5. Offer the swivel pin housing and hub assembly to the axle case, carefully engaging the splines on the half shaft into the final drive unit.

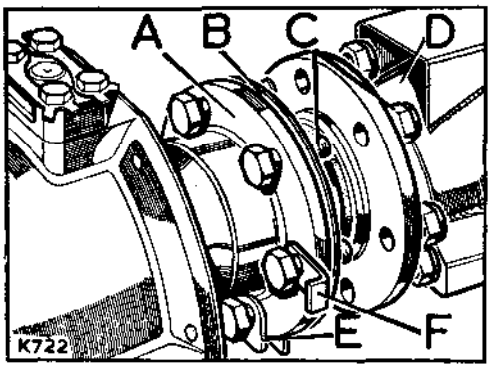


**Fig. F1-37. Swivel pin housing to axle case location**

A—Swivel pin housing
B—Joint washer
C—Fixings, swivel pin housing to axle case
D—Axle case
E—Location stop for jack (RH side only)
F—Lock stop plate

## Operation F1-8—*continued*

6. Secure the swivel pin housing to the axle case.
7. Connect the steering drag link and track rod, as applicable. Tighten the ball joint fixing nuts to a torque figure of 30 lb ft (4,0 mkg).
8. Connect the front brake pipe at the coupling with the flexible pipes.
9. Bleed and adjust the brakes. See Section H.
10. Replenish the front axle lubricating oil. Operation F1-1.
11. Fit the road wheels.
12. Check, and if necessary, adjust the steering stop.
13. Ensure that the axle case breather is clear (see Operation F1-18), a blocked breather could cause failure of the oil seals fitted in the axle case and swivel pin housing.

## Swivel pin housing, remove and refit—Operation F1-9

*(For overhaul instructions, Operation F1-10 refers)*

Workshop hand tools:

Spanner sizes: $\frac{1}{2}$ in. BSF, $\frac{3}{8}$ in. BSF, $\frac{7}{16}$ in. BSF, $\frac{7}{16}$ in. AF, $\frac{9}{16}$ in. AF, $\frac{5}{8}$ in. AF open end $\frac{3}{8}$ in. BSF, $\frac{5}{8}$ in. BSF, 2 in. AF sockets

Special tools:

Extractor for steering ball joints, Part No. 600590

### To remove

1. Drain the lubricating oil from the front axle and swivel pin housing. Operation F1-1.
2. Remove the front hub, brake anchor plate, and stub axle. Operation F1-4.

   **Note:** To avoid the necessity of bleeding the brakes on reassembly, DO NOT disconnect the brake pipes, after removing the anchor plate fixings, suspend the plate without straining the flexible pipe.
3. Withdraw the axle half shaft complete.

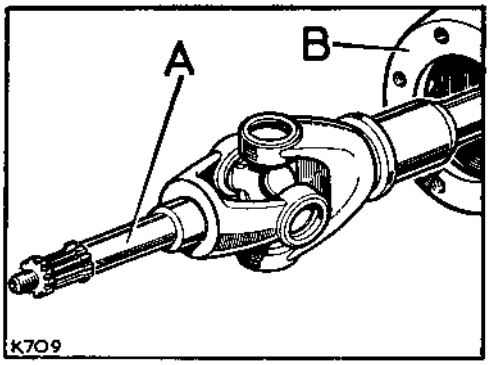


**Fig. F1-38. Axle half shaft**

A—Axle half shaft complete
B—Swivel pin housing

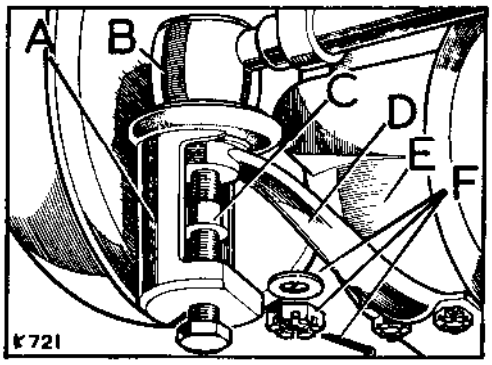


**Fig. F1-39. Steering track rod and drag link connections**

A—Special tool, Part No. 600590
B—Ball joint
C—Thread protection cap, part of 600590
D—Steering lever
E—Swivel pin housing
F—Fixings, ball joint to steering lever

4. Disconnect the steering drag link and track rod as required, using special tool, Part No. 600590, to extract the ball joints.

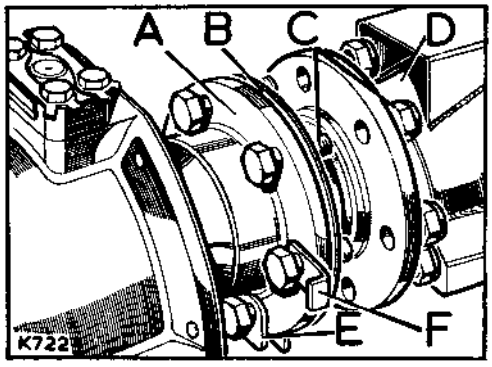


**Fig. F1-40. Swivel pin housing to axle case location**

A—Swivel pin housing
B—Joint washer
C—Fixings, swivel pin housing to axle case
D—Axle case
E—Location stop for jack (RH side only)
F—Lock stop plate

5. Remove the fixings between the swivel pin housing and the axle case, noting the steering lock stop plate, and on the right-hand side only, the jack location stop plate.
6. Withdraw the swivel pin housing complete with the joint washer.

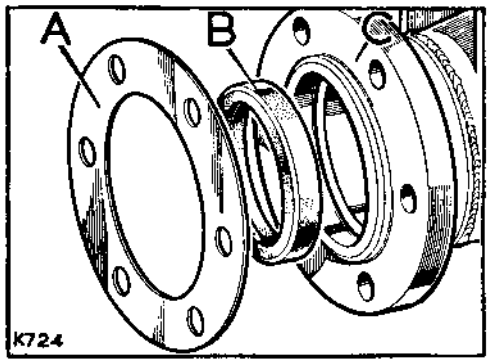


**Fig. F1-41. Oil seal and joint washer for axle case**

A—Joint washer B—Oil seal
C—Axle case

## Operation F1-9—*continued*

**To refit**

1. Before fitting the swivel pin housing, examine the oil seal fitted in the end of the axle case and if necessary, fit a new replacement.
2. Smear both sides of the joint washer with general purpose grease and place it in position on the axle case.
3. Fit the swivel pin housing to the axle case.
4. Connect the steering track rod and drag link, as applicable. Tighten the ball joint fixing nuts to a torque figure of 30 lb ft (4,0 mkg).
5. Fit the axle half shaft, long end first, into the swivel pin housing and axle case, carefully engaging the splines on the half shaft into the final drive unit.
6. Fit the stub axle, brake anchor plate and front hub. Operations F1-4 and F1-3.
7. Replenish the front axle lubricating oil. Operation F1-1.
8. Bleed and adjust the brakes. (Section H).
9. Check, and if necessary, adjust the steering stop. Operation F1-2.

## Swivel pin housing, to overhaul—Operation F1-10

*(For removal and refitting instructions, Operation F1-9 refers)*

Workshop hand tools:
Spanner sizes: $\frac{1}{4}$ in. BSF open end, $\frac{7}{16}$ in. BSF socket
Screwdriver (medium), Mallet, Spring balance

### General

Design modifications incorporated in the swivel pin housings have resulted in two main variations of swivel pin assemblies, as illustrated. Care should be taken to identify the type fitted and refer to the relative instructions

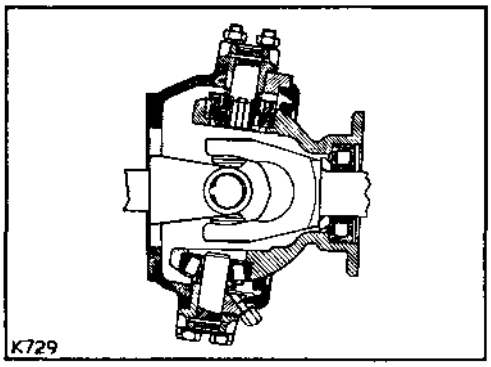


**Fig. F1-42. Cross-section of early type swivel pin housing with spring-loaded damper**

### Swivel pin conversion from spring-loaded damper to Railko bush type

The Railko bush type of steering damping gives very considerable improvement over the coil spring type; this applies particularly where there is any tendency to wheel wobble.

Owners of Land-Rovers who may be operating their vehicles under adverse conditions, may wish to take advantage of improved steering damping.

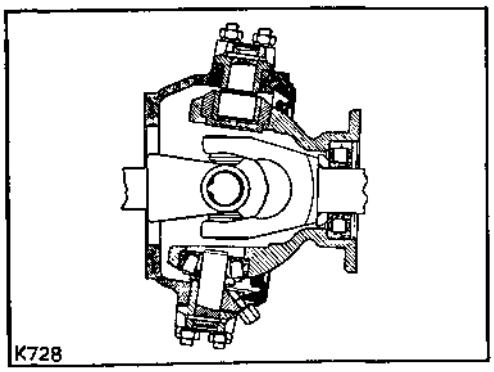


**Fig. F1-43. Cross-section of latest type swivel pin housing with Railko bush type friction damper**

A swivel pin conversion kit, which is complete with detailed fitting instructions, is available under Part No. 532268.

The parts supplied can be easily fitted to any Land-Rover from 1954 onwards by removing the existing swivel pin, coil spring, cone and cone seat and fitting in their place the new swivel pin and swivel pin bearing housing and bush.

From axles numbered:

141107339 88 RHD
144104520 88 LHD
151108875 109 RHD
154103275 109 LHD onwards

the steering levers are fitted to the bottom of the swivel housings with the ball joints above the levers.

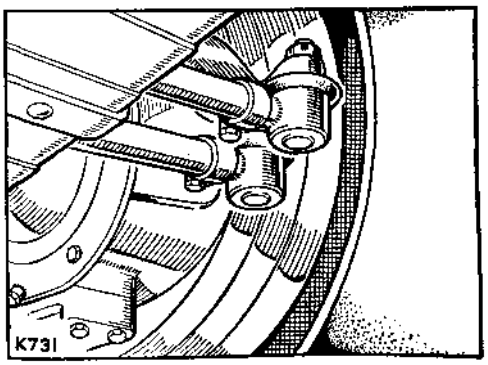


**Fig. F1-44. Early type pendant ball joint**

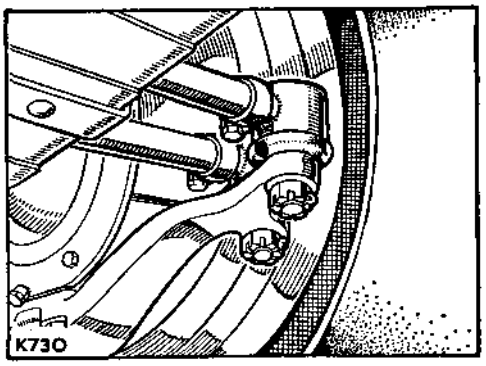


**Fig. F1-45. Late type non-pendant ball joint**

## Operation F1-10—*continued*

Swivel pin and steering levers are not interchangeable as individual items; they can, however, be fitted in pairs provided either the swivel pin housing complete is changed for the latest type, or studs are fitted in the bottom position of the existing swivel pin housing. Studs required are 6 off 508152, 2 off 508153. It is most important that the latest type steering levers are not fitted to an early type housing in the lower position with the existing bolts; the studs detailed above including the special fitting studs 508153 must be fitted. This prevents any tendency for movement between lever and housing which could give rise to premature breakage of the bolts with the possibility of serious damage.

### Early type swivel pin housing with spring-loaded damper

### To dismantle

1. Remove the oil seal retainer.
2. Prise the oil seal from the swivel pin housing.

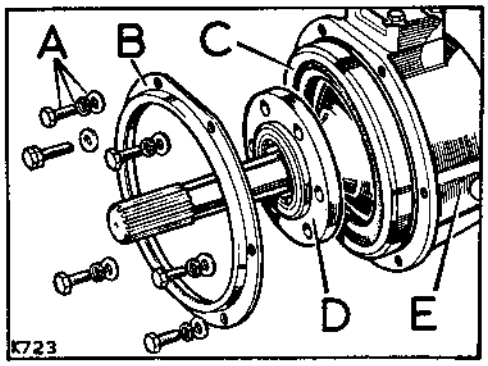


**Fig. F1-46. Oil seal for swivel pin housing**
A—Fixings (6 off) oil seal retainer to swivel pin housing
B—Oil seal retainer
C—Oil seal
D—Swivel pin bearing housing
E—Swivel pin housing

3. Remove the swivel pin and steering lever assembly from the swivel pin housing together with the shims, which should be preserved. Remove the cone bearing spring.
4. Remove the swivel pin and bracket assembly from the swivel pin housing together with the shims, which should be preserved.
5. Part the swivel pin and swivel pin bearing housings and remove the roller race inner member and the cone bearing.
6. Drive out the race outer member and the cone seat from the swivel pin bearing housing.

### Inspection

1. Examine the bottom taper roller race and swivel pin for wear and renew as necessary. The bearing should be a *light press fit* in the housing and a *light push fit* on the swivel pin. If a new bearing race is slack in the housing, the housing must be renewed; if it is slack on the swivel pin, the swivel pin assembly must be renewed.
2. Examine the upper cone seat and swivel pin for wear and roughness and rectify as necessary. The cone seat should be a *light press fit* in the housing; if a new cone seat is slack in the housing, the housing must be renewed.
3. If the swivel pins are worn, new replacements can be fitted as follows:
   (a) Thoroughly clean the boss of the steering lever or bracket with paraffin and a wire brush.
   (b) Drill out the grooved pin by means of a $\frac{1}{8}$ in. (3,17 mm) drill.
   (c) Place the steering lever or bracket upon a solid base, i.e., between the jaws of a vice, and drive out the swivel pin from the lever or bracket boss by means of a brass drift.
   (d) **Top swivel pin only.** Fit the new pin, by positioning its splines in relation to the track rod lever as shown, that is with a splined groove placed in line with the longitudinal axis of the track rod lever. This is very important as it ensures that the cone is located correctly.

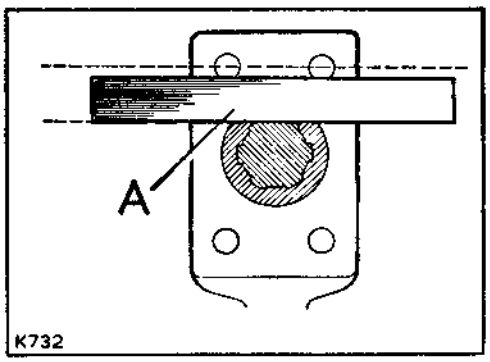


**Fig. F1-47. Setting the top swivel pin**
A—Straight edge

## Operation F1-10—*continued*

(e) Press the pin squarely into the lever or bracket.

(f) Drill the lever or bracket boss and swivel pin with a $\frac{5}{32}$ in. (4 mm) drill and insert a $\frac{5}{32}$ in. grooved pin.

4. Examine the cone bearing for wear or roughness and rectify or renew as necessary.

5. Examine the surface of the swivel pin bearing housing for signs of corrosion or damage, and renew it if necessary.

### To assemble

1. Press the roller bearing for the axle half shaft into the swivel pin bearing housing.

2. Press the taper roller bearing outer race, wide side first, into the bottom of the swivel pin bearing housing and place the roller bearing in position.

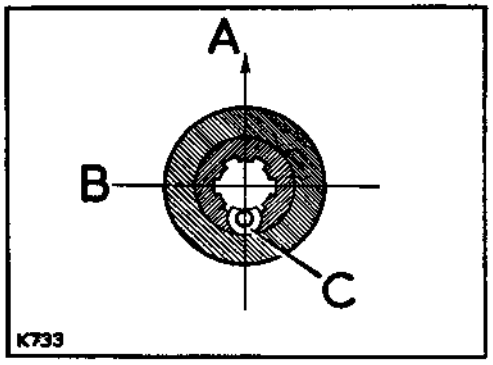


**Fig. F1-48. Setting the cone bearing**

A—Front of vehicle
B—Centre line of front axle
C—Vertical oil hole

3. Insert the cone bearing after smearing with oil, with the vertical oil hole in the bearing towards the rear of the vehicle.

4. Insert the race inner member, and holding it in position, offer the swivel pin housing to the bearing housing.

5. Smear the mating surfaces with suitable sealing compound and replace the swivel pin and bracket assembly at the bottom of the swivel pin housing, together with the shims removed on stripping, to the value of .040 in. (1,0 mm); tighten down. Sharply tap the assembly to ensure positive seating and again check the tightness of the securing nuts.

6. Insert the cone spring in the top bearing.

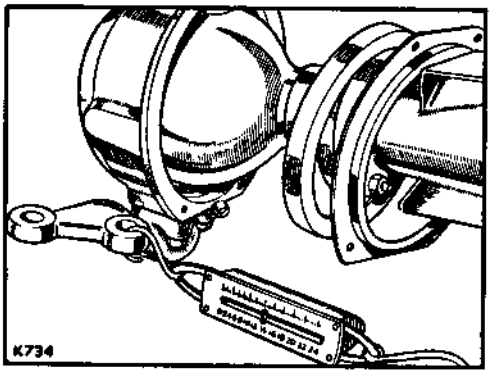


**Fig. F1-49. Checking swivel pin housing resistance to rotation**

**Note:** The swivel pins can be checked when in position on the axle, but the oil seal must be withdrawn as illustrated.

7. Fit the swivel pin and steering lever assembly to the swivel pin housing, fitting the shims removed on stripping to the value of .040 in. (1,0 mm).

   Note that the double steering lever is fitted to the LH assembly on RHStg models and to the RH assembly on LHStg vehicles.

8. Tighten the top swivel pin fixing nuts evenly and securely, but do not engage the lockplates.

9. Hold the swivel pin bearing housing by clamping the flange in a vice fitted with soft jaws, or temporarily, fit the swivel pin housing to the axle case.

10. Using a spring balance attached to the steering lever at the track rod connecting eye, measure the resistance to rotation of the swivel pin housing, which must be 14 lb to 16 lb (6,3 kg to 7,3 kg) after having overcome inertia. Adjust as necessary by adding or subtracting shims at the top only, until the correct resistance figure is obtained.

11. Engage the lockplates at the swivel pin fixing nuts.

## Operation F1-10—*continued*

12. Pack the swivel pin housing oil seal with heavy grease, and fit the seal and its retainer to the swivel pin housing, locating the steering stop adjustment bolt in the forwardmost hole.

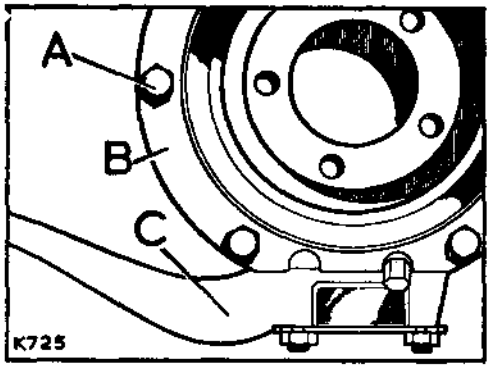


**Fig. F1-50. Location of steering stop adjustment bolt**

A—Bolt for steering stop adjustment
B—Retainer for oil seal
C—Steering lever

13. Check that the oil seal wipes the full surface of the bearing housing and adjust the position, if necessary, by slackening off the retainer bolts and resetting the seal.

### Latest type swivel pin housing with Railko bush type damper

### To dismantle

1. Remove the oil seal retainer.

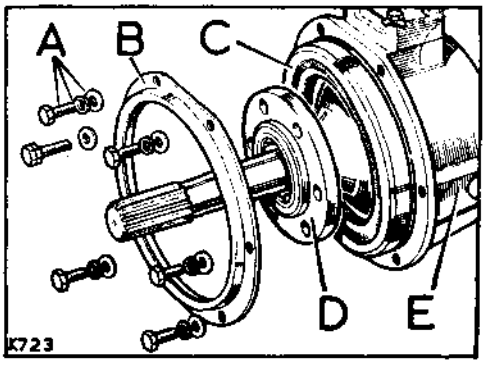


**Fig. F1-51. Oil seal for swivel pin housing**

A—Fixings (6 off) oil seal retainer to bearing housing
B—Oil seal retainer
C—Oil seal for bearing housing
D—Swivel pin bearing housing
E—Swivel pin housing

2. Prise the bearing housing oil seal from the swivel pin housing.
3. Remove the swivel pin end bracket and steering lever.

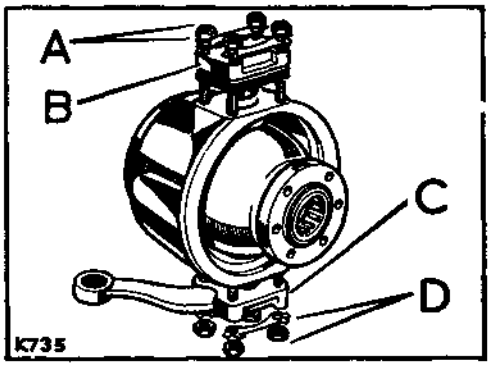


**Fig. F1-52. Swivel pin end cap and steering lever**

A—Fixings for end cap
B—End cap and swivel pin
C—Steering lever and swivel pin
D—Fixings for steering lever

4. Withdraw the swivel pin bearing housing complete with bearings.

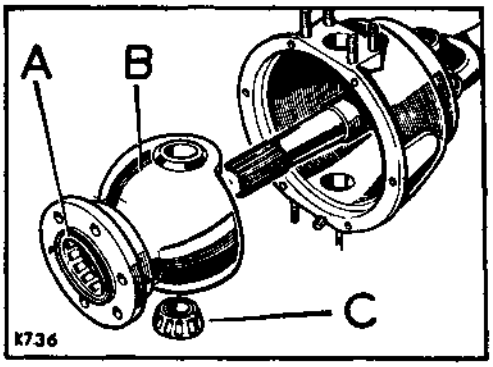


**Fig. F1-53. Swivel pin bearing housing**

A—Roller bearing for axle half shaft
B—Bearing housing
C—Taper roller bearings for bottom swivel pin

## Operation F1-10—*continued*

5. Press the bush and bearings from the swivel pin bearing housing, as required.

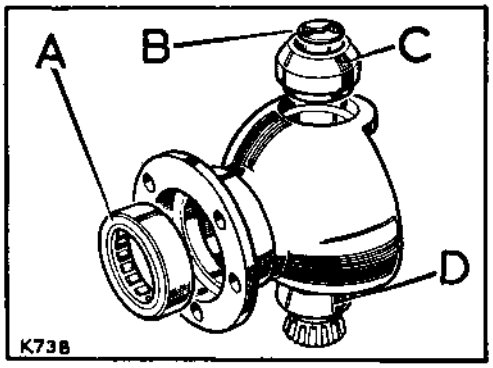


**Fig. F1-54. Bush and bearings for swivel pin housing**

A—Roller bearing for axle half shaft
B—Thrust washer for top swivel pin (early models)
C—Railko bush for top swivel pin
D—Outer race for bottom swivel pin bearing

6. On early models, withdraw the thrust washer from the bush for the top swivel pin. Later models have a modified bush which does not have a separate thrust washer.

### Inspection

1. Examine all components for obvious wear or damage.
2. The taper roller bearing must be a light push fit on the bottom swivel pin, if a new bearing is a loose fit, the swivel pin assembly must be renewed.
3. The Railko bush must be a light push fit on the top swivel pin, if a new bush is a loose fit, the swivel pin assembly must be renewed. It is important to note that these bushes and thrust washers should not be washed in any type of cleaning fluid, otherwise there is a danger that the damping characteristics of the material will be adversely affected.
4. Examine the surface of the swivel pin bearing housing for signs of corrosion or damage, and renew if necessary.

### To assemble

1. Using the same oil as recommended for the swivel pin housing (see Section X), thoroughly lubricate the internal diameter of the Railko bush.
2. Press the roller bearing for the axle half shaft into the swivel pin bearing housing.
3. Press the Railko bush into the top of the bearing housing, and the taper bearing outer race, wide edge first, into the bottom of the housing. Take care to correctly identify the bush and bearing locations, noting that the top of the housing is narrower, as illustrated.

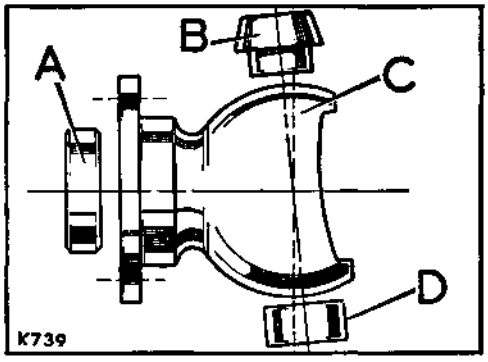


**Fig. F1-55. Bush and bearing locations**

A—Roller bearing for axle half shaft
B—Railko bush
C—Top of housing
D—Outer race for taper roller bearing

4. If the early type Railko bush is fitted, place the thrust washer in the bush.
5. Place the taper roller bearing in position in the bottom of the swivel pin bearing housing, and locate the bearing housing into the swivel pin housing.
6. Fit a rubber 'O' ring to the steering lever and swivel pin assembly, smear the mating surfaces of the swivel pin and housing with jointing compound, fit the steering lever ensuring that it faces forward (away from the oil filler/level plug), then secure and engage the lock plates.

## Operation F1-10—*continued*

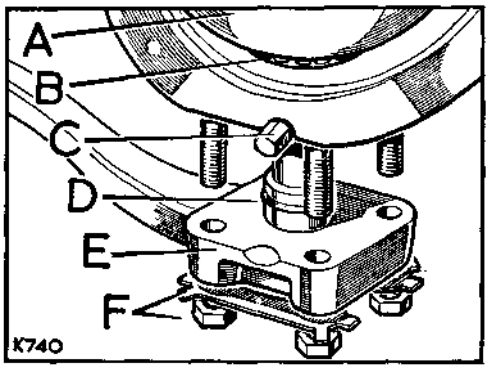


**Fig. F1-56. Steering lever and swivel pin assembly**

A—Swivel pin bearing housing
B—Taper roller bearing
C—Drain plug for swivel pin housing
D—Rubber 'O' ring
E—Steering lever and swivel pin assembly
F—Fixings for steering lever

**Note:** The double steering lever is fitted to the LH assembly on RHStg models and to the RH assembly on LHStg models.

7. Fit the swivel pin and bracket assembly to the top of the swivel pin housing, fitting the shims removed during dismantling to the value of .040 in. (1,0 mm). Tighten the fixings bolts evenly and securely, but do not engage the lock plates at this stage.

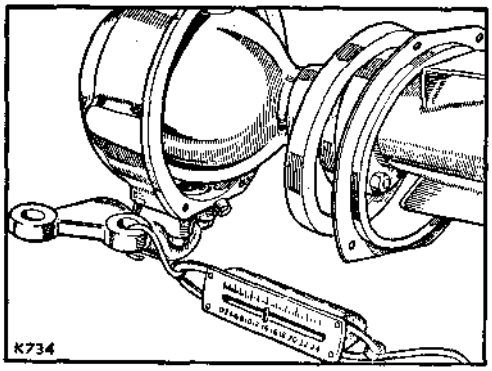


**Fig. F1-57. Checking swivel pin housing resistance to rotation**

8. Hold the swivel pin bearing housing by clamping the flange in a vice fitted with soft jaws, or temporarily fit the swivel pin housing to the axle case.

9. Using a spring balance attached to the steering lever at the track rod connecting eye, measure the resistance to rotation of the swivel pin housing, which must be 12 lb to 14 lb (5,4 kg to 6,3 kg) after having overcome inertia. Adjust as necessary by adding or subtracting shims under the swivel pin bracket until the correct resistance figure is obtained.

10. Engage the lockplates at the swivel pin fixing nuts.

11. Pack the swivel pin housing oil seal with heavy grease, and fit the seal and its retainer to the swivel pin housing, locating the steering stop adjustment bolt in the forwardmost hole.

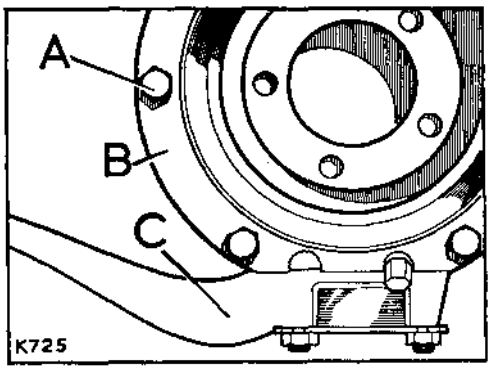


**Fig. F1-58. Location of steering stop adjustment bolt**

A—Bolt for steering stop adjustment
B—Retainer for oil seal
C—Steering lever

12. Check that the oil seal wipes the full surface of the bearing housing and adjust the position, if necessary, by slackening off the retainer bolts and resetting the seal.

**Note:** When refitting the swivel pin housing to the axle, ensure that the axle case breather is clear (see Operation F1-18), a blocked breather could cause failure of the oil seal fitted in the swivel pin housing.

## Front shock absorbers, remove and refit—Operation F1-11

**Refer to Section E. Operation E1-7**

The instructions for this operation are similar to those for Operation E1-7 except that references to rear axle and suspension components should be read as front.

## Front road springs, remove and refit—Operation F1-12

*(For overhaul instructions, Operation* F1-13 (E1-10) *refers)*

**Refer to Section E. Operation E1-9**

The instructions for this operation are similar to those for Operation E1-9 except that references to rear axle and suspension components should be read as front. Also, disregard reference to brake pipe shields.

## Front road springs, overhaul—Operation F1-13

*(For removal and refitting instructions, Operation* F1-12 (E1-9) *refers)*

**Refer to Section E. Operation E1-10**

The instructions for this operation are similar to those for Operation E1-10 except that references to rear axle and suspension components should be read as front.

## Bump stop rubber, remove and refit—Operation F1-14

**Refer to Section E. Operation E1-11**

The instructions for this operation are similar to those for Operation E1-11 except that references to rear axle and suspension components should be read as front.

## Oil seal for bevel pinion case, remove and refit—Operation F1-15

**Refer to Section E. Operation E1-12**

The instructions for this operation are similar to those for Operation E1-12 except that references to rear axle components should be read as front.

## Differential, remove and refit—Operation F1-16

*(For overhaul instructions, Operation F1-17 (E1-14) refers)*

Workshop hand tools:
Spanner sizes: $\frac{3}{8}$ in. BSF, $\frac{7}{16}$ in. BSF, $\frac{7}{16}$ in. AF, $\frac{9}{16}$ in. AF, $\frac{5}{8}$ in. AF open end

Special tools:
Extractor for steering ball joints, Part No. 600590

### To remove

1. Drain the lubricating oil from the differential. Operation F1-1.
2. Slacken the fixings at the front road wheels.
3. Jack up the front of the vehicle and support on stands.

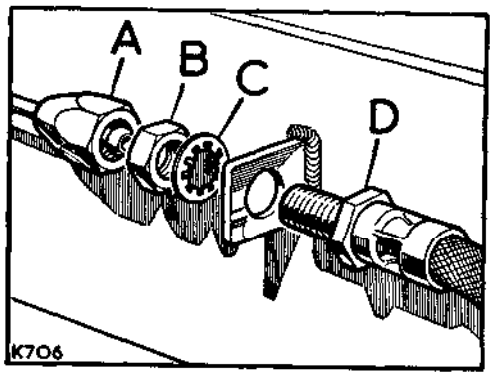


**Fig. F1-59. Front brake pipe connections**

A—Pipe from master cylinder
B—Locknut
C—Shakeproof washer
D—Flexible brake pipe

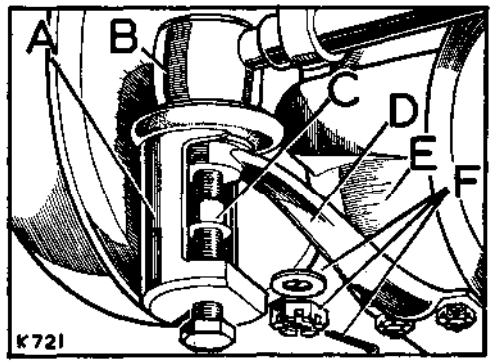


**Fig. F1-60. Steering track rod and drag link connections**

A—Special tool, Part No. 600590
B—Ball joint
C—Thread protection cap, part of 600590
D—Steering lever
E—Swivel pin housing
F—Fixings, ball joint to steering lever

4. Remove the front road wheels.
5. Disconnect the front brake pipes at the connections with the flexible pipes, one each side of the vehicle, and withdraw the flexible pipes from the chassis brackets. Then, depress the brake pedal and wedge it in that position, to prevent further leakage of brake fluid. When depressing brake pedal, take precautions to avoid fluid spillage.
6. Disconnect the steering track rod and drag link, using special tool, Part No. 600590, to extract the ball joints.
7. Remove the fixings between the swivel pin housings and the axle case, noting the steering lock stop plate, and on the right-hand side only, the jack location stop plate.

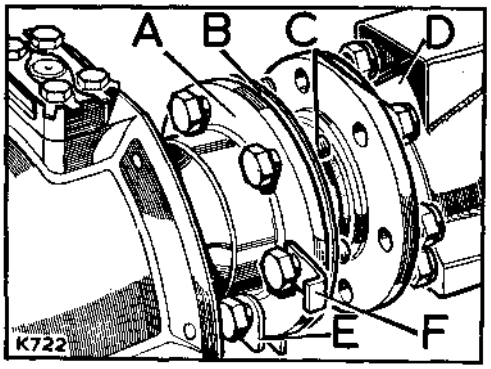


**Fig. F1-61. Swivel pin to axle case location**

A—Swivel pin housing
B—Joint washer
C—Fixings, swivel pin housing to axle case
D—Axle case
E—Location stop for jack (RH side only)
F—Lock stop plate

8. Withdraw the swivel pin housing, axle half shaft and front hub assembly.
9. Disconnect the prop shaft and move it clear of the differential.
10. Remove the differential.

## Operation F1-16—*continued*

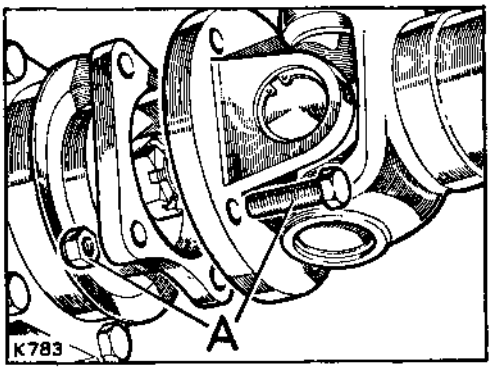


**Fig. F1-62. Propeller shaft for front axle**

A—Fixings at coupling flange

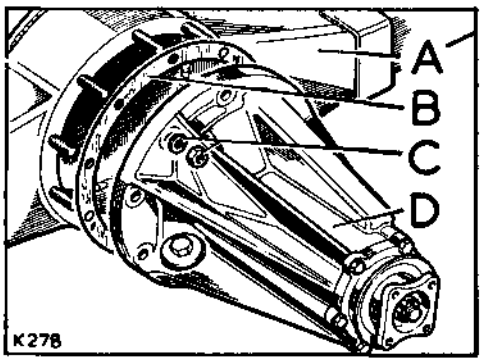


**Fig. F1-63. Differential**

A—Front axle case
B—Joint washer
C—Fixings, bevel pinion housing
D—Bevel pinion housing

### To refit

1. Smear general purpose grease on both sides of the joint washer for the differential, and fit the joint washer and differential to the axle case.
2. Reconnect the front propeller shaft.
3. Smear general purpose grease on both sides of the joint washers for the axle case ends, and place in position on the axle case.
4. Offer the swivel pin housing and hub assemblies, each in turn, to the axle case, carefully engaging the splines on the half shaft into the final drive unit.
5. Secure the swivel pin housings to the axle case.

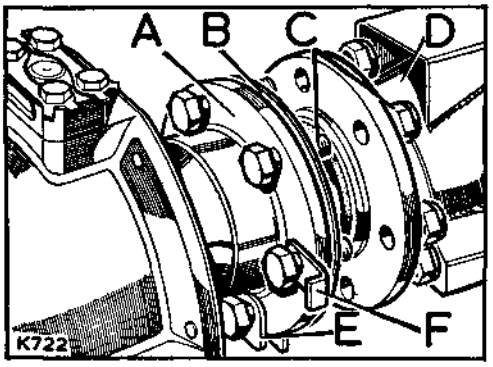


**Fig. F1-64. Swivel pin housing to axle case location**

A—Swivel pin housing
B—Joint washer
C—Fixings, swivel pin housing to axle case
D—Axle case
E—Location stop for jack (RH side only)
F—Lock stop plate

6. Connect the steering track rod and drag link. Tighten the ball joint fixing nuts to a torque figure of 30 lb ft (4,0 mkg).
7. Connect the front brake pipes at the couplings with the flexible pipes.
8. Bleed and adjust the brakes.
9. Replenish the front axle lubricating oil. Operation F1-1.
10. Fit the road wheels.
11. Check, and if necessary, adjust the steering stop.

## Differential, overhaul—Operation F1-17

*(For removal and refitting instructions, Operation* F1-16 *refers)*

**Refer to Section E. Operation E1-14**

The instructions for this operation are the same as those for Operation E1-14.

## Front axle case, remove and refit—Operation F1-18

Workshop hand tools:
Spanner sizes: $\frac{1}{2}$ in. BSF, $\frac{7}{16}$ in. BSF, $\frac{7}{16}$ in. AF, $\frac{9}{16}$ in. AF, $\frac{5}{8}$ in. AF open end
Pliers

### To remove

1. Drain the lubricating oil from the differential. Operation F1-1.
2. Remove the differential. Operation F1-16.
3. Remove the four 'U'-bolts, and withdraw the axle case from the vehicle.

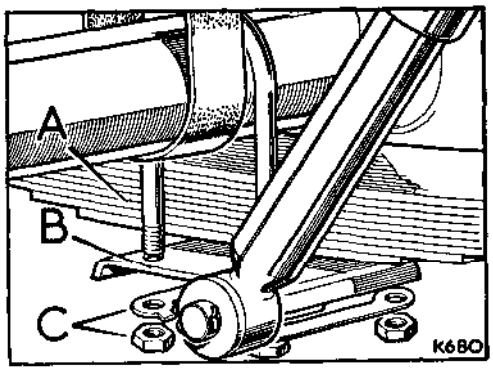


**Fig. F1-65. Fixings for 'U'-bolts**

Note: 'U'-bolt fixings are similar for front and rear axles, illustration shows rear axle.

A—Road spring B—Bottom plate
C—Fixings for 'U'-bolts

### To refit

1. Before fitting the axle case, ensure that the breather is clear, a blocked breather could cause failure of the oil seals in the axle case and final drive unit.

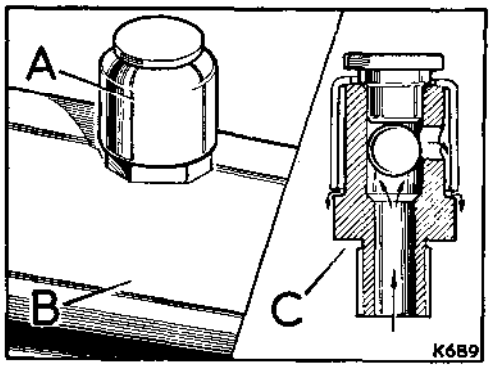


**Fig. F1-66. Breather for axle case**

A—Breather
B—Axle case
C—Flow through breather

2. Examine the oil seals fitted in the ends of the axle case and fit new replacements if necessary. If a new axle case is being fitted, new oil seals must be fitted.

   When fitting new oil seals, smear the outside diameter of the seal with jointing compound, and fit the seal, lipped side inward, into the axle case, flush with the recessed end.

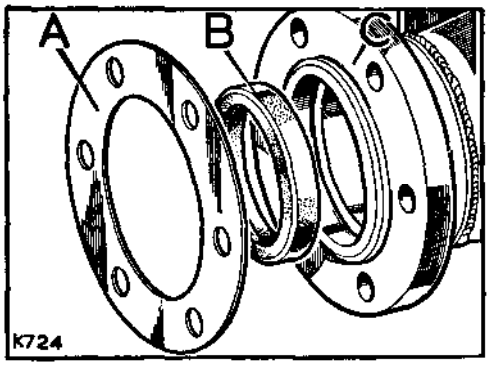


**Fig. F1-67. Oil seal and joint washer for axle case**

A—Joint washer B—Oil seal
C—Axle case

3. Locate the axle case in position on the road springs.
4. Fit the axle 'U'-bolts and engage the lock plates.
5. Refit the differential. Operation F1-16.
6. Replenish the front axle lubricating oil. Operation F1-1.
7. Bleed and adjust the brakes. (Section H).
8. Check, and if necessary, adjust the steering stop. Operation F1-2.

## Front axle assembly, to remove and refit—Operation F1-19

Workshop hand tools:
Spanner sizes: $\frac{7}{16}$ in. BSF, $\frac{9}{16}$ in. AF, $\frac{5}{8}$ in. AF, $\frac{13}{16}$ in. AF, $\frac{7}{8}$ in. AF open end
Pliers, Mallet, Screwdriver (medium)

Special tools:
Extractor for steering ball joints, Part No. 600590

### To remove

1. Slacken the fixings at both front road wheels.
2. Jack up the front of the vehicle and support on stands.
3. Remove both front road wheels.
4. Disconnect the front propeller shaft from the final drive unit.

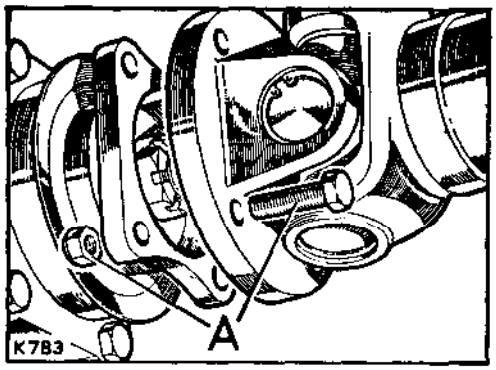


**Fig. F1-68. Propeller shaft for front axle**

A—Fixings at coupling flanges

5. Disconnect the front brake pipes at their connections with the flexible pipes each side of the vehicle, and withdraw the flexible pipes from the chassis brackets. Then, depress the brake pedal, and wedge it in that position, to prevent further leakage of brake fluid. When depressing the brake pedal, take precautions to avoid fluid spillage.

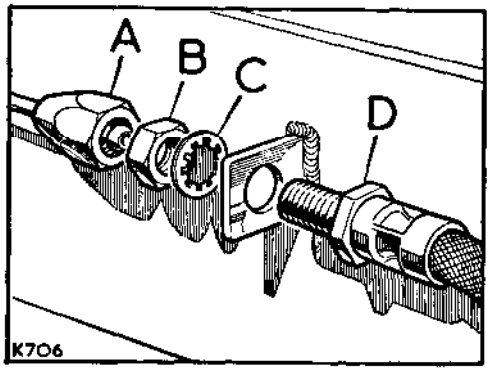


**Fig. F1-69. Front brake pipe connection**

A—Pipe from master cylinder
B—Locknut
C—Shakeproof washer
D—Flexible brake pipe

6. Disconnect the steering drag link from the lower relay lever, using special tool, Part No. 600590, to extract the ball joints.

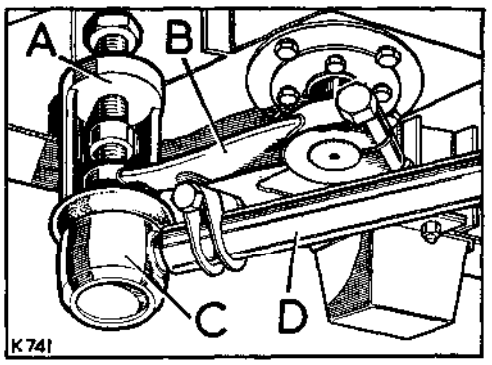


**Fig. F1-70. Steering relay connection**

A—Special tool, Part No. 600590
B—Lower relay lever
C—Ball joint
D—Steering drag link

7. Disconnect the lower ends of the shock absorbers from the road spring bottom plates.

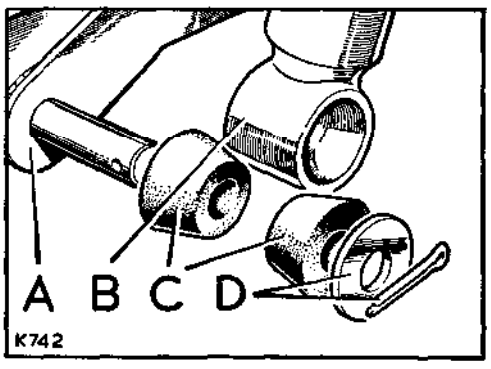


**Fig. F1-71. Shock absorber, lower end fixing**

A—Bottom plate for spring
B—Shock absorber
C—Rubbers
D—Fixings

## Operation F1-19—*continued*

8. Remove the four 'U'-bolts from the axle.

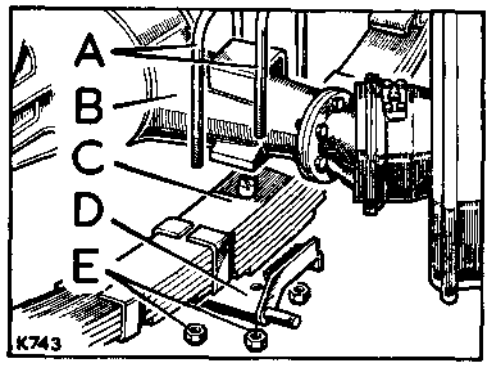


**Fig. F1-72. Axle 'U'-bolts**

A—'U'-bolts C—Road spring
B—Front axle D—Bottom plate
E—Fixings for 'U'-bolts

9. Support the front axle with a jack, slacken all six shackle pins at the front road springs, then remove the two front pins.

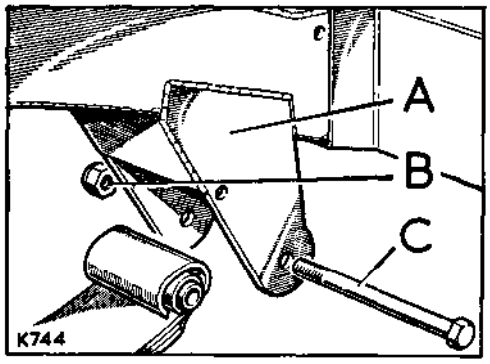


**Fig. F1-73. Front fixing for road spring**

A—Chassis bracket
B—Self-locking nut
C—Shackle pin

10. Lower the jack and withdraw the axle from under the vehicle.

**To refit**

1. Place the axle on a jack and position under the vehicle.
2. Using a second jack, raise each road spring in turn and connect the front ends of the springs to the chassis, but DO NOT tighten the shackle pins and locknuts at this stage.
3. Fit the axle 'U'-bolts and engage the lock plates.
4. Secure the shock absorber bottom fixings.
5. Connect the steering drag link to the lower relay lever. Tighten the ball joint fixing nut to a torque figure of 30 lb ft (4,0 mkg).
6. Connect the front brake pipes at the coupling with the flexible pipes.
7. Fit the front propeller shaft.
8. Fit the front road wheels.
9. Lower the vehicle to the ground and move vehicle bodily backward and forward to settle the springs, then tighten all six shackle pins and locknuts.

   **Note:** If the shackle pins and locknuts are tightened prior to lowering the vehicle to the ground, premature failure of the spring bushes will occur.
10. Bleed and adjust the brakes.
11. Replenish the front axle lubricating oil. Operation F1-1.
12. Check, and if necessary, adjust the steering stop.

# Fault diagnosis—Front axle and suspension

## Steering kick and wheel wobble

A certain amount of wheel kick must be expected over rough surfaces, but if this becomes excessive or if actual wheel wobble is experienced, the following checks must be carried out. Only after these checks have failed to reveal the cause should the swivel pin damping be checked.

1. Ensure that the bolts securing the steering box to its mounting bracket, and the bolts securing the bracket to the frame are tight. Also ensure that the steering box stiffener bracket is fitted.
2. Check the steering box adjustment, Operation G1-8.
3. Check the nut securing the drop arm to the rocker shaft and nuts securing ball joints to track rod and steering arms for tightness.
4. Check the ball joints for alignment and wear. Adjust or renew as necessary.
5. Check the relay top and bottom lever clamp bolt for tightness and check for wear at lever and shaft splines. Rectify any play in the relay unit.
6. The bolts securing the relay to the chassis must be checked for tightness, also the four bolts at the bottom plate for the relay. Check the bolt flanges for cracking and check the fit of the bottom of the relay in the spigot, this must be firm.
7. The nuts and studs securing the steering levers must be checked, and ensure that the one special 'fitting' stud on each side is a tight fit and that it positively locates the arm.
8. Check shock absorber action—replace if weak. Examine the rubber bushes and replace as necessary. Check road spring shackle pins and bushes for wear, check tightness of 'U' bolts. Ensure that the spring location bolt has not sheared and that its seating hole is not elongated.
9. Check all the spring leaves, either side of the centre bolt, for breakage.
10. Check the swivel pin damping (poundage figure), Operation F1-10, and adjust as necessary.
11. Check for badly or unevenly worn tyres. Similar tread pattern tyres should be fitted. Check the tyre pressures, Section R. Check the front wheel alignment, Operation G1-2.
12. While the vehicle is on a ramp or pit, examine the chassis members and axle casings for accident damage.

## Fault diagnosis—Front axle and suspension—*continued*

| Symptom | Possible cause | Investigation | Remedy |
|---|---|---|---|
| **Vehicle pulls to one side** | Incorrect camber | Check for settled road springs, worn shackle bushes or damage to front axle unit | Renew parts as necessary |
| | Incorrect or unequal castor or swivel pin inclination | Check front wheel alignment. Check for settled road springs or damage to front axle unit | Adjust wheel alignment and/or fit new parts as required |
| | Uneven tyre pressures or worn tyres | Check tyre pressures and wear condition, Section R | Fit new tyres and/or adjust pressures |
| | Dragging brake | Check brake adjustment, Section H | Adjust brakes |
| | Swivel pin tight | Dismantle and check swivel pins | Fit new parts as required, lubricate swivel pins on assembly |
| | Tight or dirty front wheel bearings | Remove hubs and check bearings | Fit new parts as required, pack hubs with fresh grease, refit and adjust hubs |
| | Incorrect toe-in of front wheels | Check wheel alignment, Operation G1-2 | Adjust as necessary |
| **Vehicle wanders** | Incorrect tyre pressures or worn tyres | Check tyre pressures and wear condition, see Section R | Fit new tyres and/or adjust pressures |
| | Loose axle 'U' bolts | Check 'U' bolt fixings | Securely tighten |
| | Incorrect toe-in of front wheels | Check wheel alignment, Operation G1-2 | Adjust as necessary |
| | Tight steering box | Check adjustment, Operation G1-8 | Adjust as necessary |
| | Worn front wheel bearings | Check front hub bearings and adjustment | Renew and/or adjust hub bearings as necessary |
| | Worn swivel pins and bearings | Dismantle swivel pin housings | Fit new parts as required, lubricate swivel pins on assembly |
| | Incorrect castor | Check for settled road springs, damage to front suspension and axle unit | Fit new parts as required |
| | Bent or broken chassis | Check alignment of chassis, Section J | Repair or replace chassis |
| **Wheel wobble** | (See notes preceding fault finding chart) | | |
| | Steering column loose at dash | Check fixings | Securely tighten |
| | Incorrect tyre pressures or worn tyres | Check tyre pressures and wear condition | Fit new tyres and/or adjust pressures |
| | Eccentric wheels and tyres | Check the tyre concentricity line. Check wheel pressings for damage or distortion | Rectify or renew |
| | Worn or loose hub bearings | Check bearings and adjustment | Renew and/or adjust hub bearings as necessary |
| | Worn swivel pins and bearings | Dismantle swivel pin housings | Fit new parts as required, lubricate swivel pins on assembly |
| | Insufficient damping at swivel pins | Check poundage figure, Operation F1-10 | Adjust as necessary |
| | Insufficient damping at relay unit | Dismantle relay unit | Fit new parts as required |

## Fault diagnosis—Front axle and suspension—*continued*

| Symptom | Possible cause | Investigation | Remedy |
|---|---|---|---|
| | Loose engine mountings | Check fixings | Securely tighten |
| | Worn universal joint at axle half shaft | Remove axle half shafts and check | Overhaul universal joints |
| | Incorrect castor | Check for settled road springs, damage to front suspension and axle unit | Fit new parts as required |
| **Excessive tyre wear** | Incorrect tyre pressures | Check tyre pressures, see Section R | Adjust as necesssary |
| | Incorrect toe-in of front wheels | Check wheel alignment, Operation G1-2 | Adjust as necessary |
| | Harsh or unequal brakes | Check brake adjustment, Section H | Adjust as necessary |
| | Worn swivel pins | Jack up front of vehicle and check swivel pins | Overhaul swivel pin housings |
| | Eccentric wheels and tyres | Check tyre concentricity line. Check wheel pressings for damage or distortion | Rectify or renew |
| | Incorrect camber | Check for settled road springs, damage to front suspension and axle unit | Fit new parts as required |
| | Failure to rotate tyres | | Change position of tyres, including spare, see Section R |
| | Fast cornering | | In the hands of the operator |
| | Sustained high-speed driving | | |
| **Front end noisy** | Hydraulic damper | Check damper mounting bushes for wear | Fit new bushes. If the damper itself is noisy, renew |
| | | Check hydraulic damping, Operation E1-7 | Fit new damper |
| | Worn swivel pins | Jack up front of vehicle and check swivel pins | Overhaul swivel pin housings |
| | Looseness in front suspension | Check all mountings for wear and security. Check wheel alignment | Fit new parts as required, securely tighten mounting, adjust wheel alignment |
| | Differential lubrication level too low or incorrect grade | Check lubrication level and grade | Replenish with correct grade of lubricating oil, see Section X |
| | Differential worn | Remove differential and check | Overhaul differential |
| | Propeller shaft | | See Section D |
| **Oil leaks** | Loose or missing drain and filler plugs | Check oil drain and filler plugs at steering box, relay unit, swivel pin housing and differential | Fit new joint washers where applicable and tighten plugs |
| | Damaged joint washers | Determine point of leak, see exploded view of axle for location of joint washers and dismantle as necessary | Fit new joint washers with both sides smeared with general purpose grease |
| | Oil seals damaged or incorrectly fitted | Determine point of leak, see exploded view of axle for location of oil seals and dismantle as necessary | Fit new oil seal with 'Hylomar' SQ32M sealing compound smeared on the outside diameter |

## GENERAL DATA

| | |
|---|---|
| **Axle type** | Fully floating |
| **Oil capacity:** | |
| Differential: Rover type | 3 Imperial pints, 3½ US pints, 1,75 litres |
| ENV type | 2⅝ Imperial pints, 3.1 US pints, 1,4 litres |
| Swivel pin housing | 1 Imperial pint, 1.2 US pints, 0,5 litre |
| **Hub bearing lubrication:** | |
| Early models | Oil—⅓ Imperial pint, 0,19 litre |
| Latest models | Grease |
| Final drive | Spiral bevel |
| Ratio | 4.7:1 |
| **Angularity of universal joint on full lock:** | |
| Inner wheel | 26° |
| Outer wheel | 24° 30′ |

## DETAIL DATA

| | |
|---|---|
| **Front hub and stub axle assembly:** | |
| Front hub end-float | .004 in. to .006 in. (0,10 mm to 0,16 mm) |
| Clearance of hub bearings on hub bearing sleeve | .0002 in. to .0012 in. (0,005 mm to 0,030 mm) |
| Fit of hub inner bearing in hub | .001 in. to .003 in. (0,025 mm to 0,075 mm) interference |
| Fit of hub outer bearing in hub | .0005 in. to .0025 in. (0,030 mm to 0,0635 mm) interference |
| Clearance between stub shaft and stub axle bush (early models only) | .020 in. to .028 in. (0,50 mm to 0,70 mm) |
| Stub axle bush bore | 1.250 in. + .004 in. (31,75 mm + 0,10 mm) |
| **Swivel pin setting:** | |
| Coil spring type | Resistance of 14 lb to 16 lb (6,3 kg to 7,3 kg) at steering lever eye |
| Railko bush type | Resistance of 12 lb to 14 lb (5,4 kg to 6,3 kg) at steering lever eye |
| Clearance between stub and half shaft yoke lugs and swivel pin end faces | .050 in. (1,27 mm) |
| Cone spring: | |
| Number of working coils | 3 |
| Free length | 1.150 in. ± .010 in. (29,2 mm ± 0,25 mm) |
| Length in position | .687 in. (17,4 mm) |
| Rate | 660 lb/in. (7,5 mkg) |
| Fit of retaining collar on shaft | .001 in. (0,025 mm) interference (selective assembly) |

**Differential assembly** (Refer to Section E for differential data)

**Road springs** (Refer to Section E for rear road spring data)

| | Driver's side | Passenger's side |
|---|---|---|
| **88, Petrol, front** | | |
| Number of leaves | 9 | 9 |
| Width of leaves | 2½ in. (63,5 mm) | 2½ in. (63,5 mm) |
| Static load (vehicle unladen) | 636 lb (288,5 kg) | 490 lb (222,3 kg) |
| Camber under static load | 2 15/16 in. (74,6 mm) | 2 15/16 in. (74,6 mm) |
| Free camber | 6.080 in. (154,4 mm) | 5.330 in. (135,4 mm |
| **88, Diesel, front** | | |
| Number of leaves | 11 | 11 |
| Width of leaves | 2½ in. (63,5 mm) | 2½ in. (63,5 mm) |
| Static load (vehicle unladen) | 750 lb (340 kg) | 750 lb (340 kg) |
| Camber under static load | 2⅞ in. (73,02 mm) | 2⅜ in. (60,3 mm) |
| Free camber | 5⅝ in. (143 mm) | 5⅛ in. (130,2 mm) |
| **109, Petrol, front** | | |
| Number of leaves | 11 | 11 |
| Width of leaves | 2½ in. (63,5 mm) | 2½ in. (63,5 mm) |
| Static load (vehicle unladen) | 750 lb (340 kg) | 750 lb (340 kg) |
| Camber under static load | 2⅞ in. (73,02 mm) | 2⅜ in. (60,3 mm) |
| Free camber | 5⅝ in. (143 mm) | 5⅛ in. (130.2 mm) |
| **109, Diesel, front** | | |
| Number of leaves | 11 | 11 |
| Width of leaves | 2½ in. (63,5 mm) | 2½ in. (63,5 mm) |
| Static load (vehicle unladen) | 750 lb (340 kg) | 750 lb (340 kg) |
| Camber under static load | 3⅜ in. (86 mm) | 2⅞ in. (73,02 mm) |
| Free camber | 6¼ in. (159 mm) | 5⅝ in. (143 mm) |

**Hydraulic dampers:**

| | |
|---|---|
| Type | Telescopic, double acting |
| Mounting | Rubber bushes |

# SECTION G—STEERING

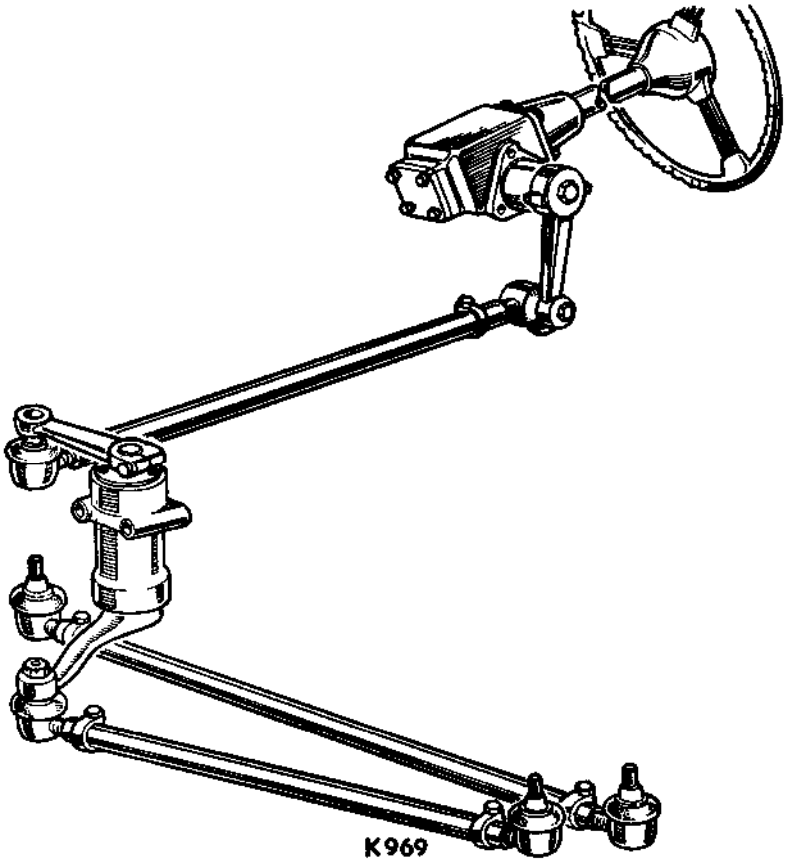


**Fig. G1-1. Steering**

**NOTE: Illustration shows pendant type ball joints, latest type are non-pendant**

# INDEX—STEERING

**Note:** A comprehensive, detailed index is included at the end of this manual


| Description | Operation No. |
|---|---|
| Exploded views and description | At beginning of Section |
| **STEERING LINKAGE** | |
| Ball joints | 6 |
| Drag link | 4 |
| Longitudinal arm | 5 |
| Lubrication | 6 |
| Relay levers | 9 |
| Steering wheel | 3 |
| Track rod | 4 |
| Wheel alignment | 2 |
| **STEERING BOX** | 7—8 |
| Adjustment | 8 |
| Drop arm | 7 |
| Lubrication | 1 |
| Steering column | 7—8 |
| **RELAY UNIT** | 9—10 |
| Friction damping | 10 |
| Lubrication | 1 |
| Relay levers | 9 |
| **FAULT DIAGNOSIS** | At end of Section |
| **DATA** | At end of Section |

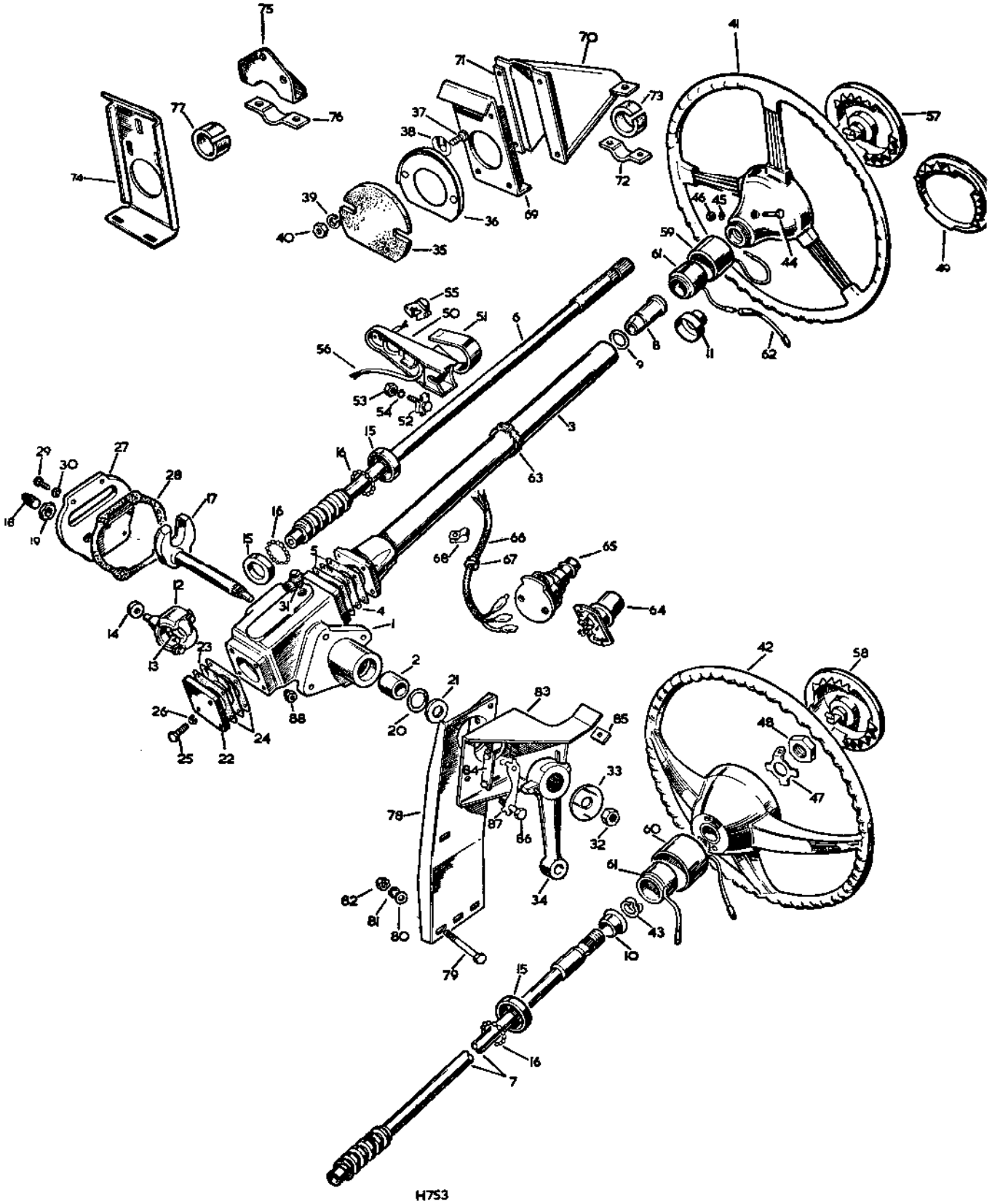


Fig. G1-2. Layout of steering box

## Key to layout of steering box

1 STEERING BOX ASSEMBLY
2 Bush for rocker shaft
3 Outer column
4 Joint washer, steel
5 Joint washer, paper
6 Inner column, early type
7 Inner column, latest type
8 Bush for inner column
9 Spring ring for inner column bush
10 Ball bearing for inner column
11 Dust shield for inner column
12 MAIN NUT ASSEMBLY
13 Steel ball ($\frac{3}{8}$ in.) for main nut
14 Roller for main nut
15 Adjustable ball race
16 Steel balls (.280 in.) for adjustable race
17 Rocker shaft
18 Adjuster screw for rocker shaft
19 Locknut for adjuster screw
20 Oil seal for rocker shaft
21 Washer for rocker shaft oil seal
22 End plate
23 Joint washer, steel
24 Joint washer, paper
25 Bolt ($\frac{5}{16}$ in. UNC x $\frac{29}{32}$ in. long) } Fixing
26 Spring washer } end plate
27 Side cover plate
28 Joint washer for side cover plate
29 Bolt ($\frac{5}{16}$ in. UNC x $1\frac{1}{16}$ in. long) } Fixing side
30 Spring washer } cover plate
31 Oil filler plug
32 Special nut } Fixing
33 Lock washer } drop arm
34 Steering drop arm
35 Rubber seal for steering column
36 Cover for steering column seal
37 Screw (2 BA x $\frac{3}{4}$ in. long) } Fixing cover and
38 Special washer } seal to dash
39 Spring washer } seal to dash
40 Nut (2 BA) } seal to dash
41 Steering wheel, early type
42 Steering wheel, latest type
43 Special spring washer on inner column for wheel
44 Bolt ($\frac{5}{16}$ in. UNF x 2 in. long) } Fixing early type
45 Plain washer } steering wheel
46 Nut ($\frac{5}{16}$ in. UNF) } steering wheel
47 Tag washer } Fixing latest type
48 Special nut } steering wheel
49 Steering wheel centre cover, early type
50 Horn push bracket
51 Clip for horn push bracket
52 Yoke assembly for horn push bracket
53 Nut ($\frac{1}{4}$ in. BSF) } Fixing horn
54 Shakeproof washer } push bracket
55 Horn push
56 Lead, horn push to junction box
57 Horn push and centre cover for steering wheel, early type
58 Horn push and centre cover for steering wheel, latest type
59 Dust cover and horn contact, early type
60 Dust cover and horn contact, latest type
61 Slip ring complete for horn contact
62 Lead, slip ring to junction box
63 Cable cleat on steering column
64 Dip switch, early type
65 Dip switch, latest type
66 Lead, dip switch to junction box
67 Grommet for lead in toe box floor
68 Clip fixing dip switch lead to floor
69 Support bracket on dash
70 Support bracket for steering column
71 Packing piece for steering column support bracket
72 Clip for steering column
73 Rubber strip for clip
74 Support bracket on dash
75 Clamp, upper, for steering column
76 Clamp, lower, for steering column
77 Rubber strip for clamp
78 Support bracket, steering box to chassis
79 Bolt ($\frac{5}{16}$ in. UNF x $3\frac{3}{4}$ in. long) } Fixing brackets
80 Plain washer, thin } to chassis frame
81 Spring washer } to chassis frame
82 Nut ($\frac{5}{16}$ in. UNF) } to chassis frame
83 Stiffener bracket for steering box
84 Bolt plate } Fixing stiffener bracket
85 Shim washer } to front face of toe box
86 Set bolt ($\frac{3}{8}$ in. UNC x $\frac{7}{8}$ in. long) } Fixing steering box to chassis support bracket
87 Locking plate } to chassis support bracket
88 Self-locking nut ($\frac{5}{16}$ in. UNF) } to chassis support bracket

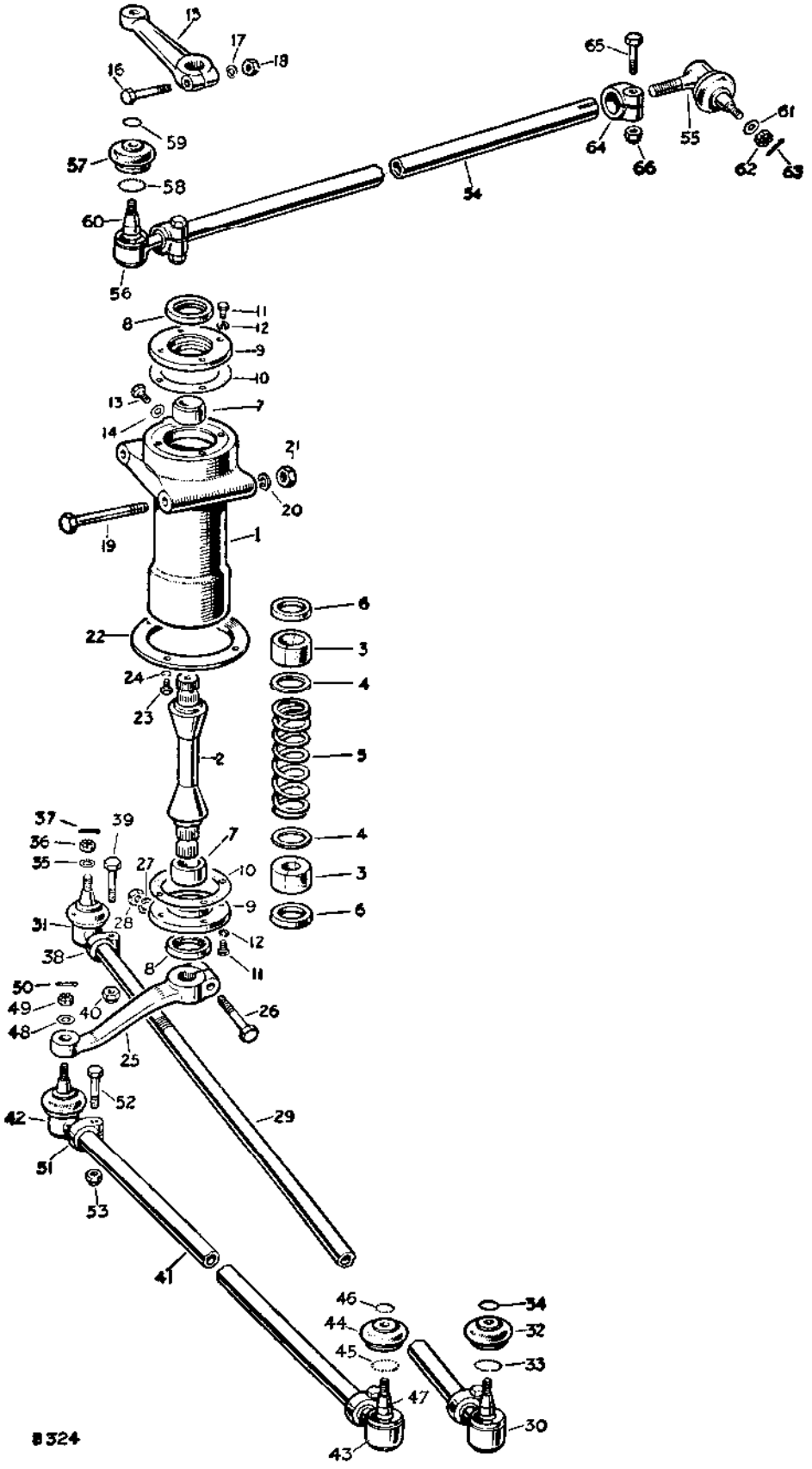


Fig. G1-3. Layout of steering linkage and relay unit

### Key to layout of steering linkage and relay unit

1 Housing for relay shaft
2 Shaft for steering relay levers
3 Split bush for housing
4 Washer for spring
5 Spring for bushes
6 Thrust washer for shaft
7 Distance piece for shaft
8 Oil seal for shaft
9 Retainer for oil seal
10 Joint washer for retainer
11–12 Fixings for retainer
13 Plug for oil hole
14 Joint washer for plug
15 Relay lever, upper
16–18 Fixings for lever
19–21 Fixings for housing
22 Flange plate for relay mounting
23–24 Fixings for flange plate
25 Relay lever, lower
26–28 Fixings for lever
29 Steering track rod assembly
30 Ball joint assembly RH thread
31 Ball joint assembly LH thread
32 Rubber cover for ball joint
33 Spring ring, cover to body
34 Spring ring and retainer, cover to ball
35–37 Fixings for ball joints
38 Clip for ball joint
39–40 Fixings for ball joint clips
41 Steering drag link assembly
42 Ball joint assembly RH thread
43 Ball joint assembly LH thread
44 Rubber cover for ball joint
45 Spring ring, cover to body
46 Spring ring } Cover to ball
47 Retainer }
48–50 Fixings for ball joints
51 Clip for ball joint
52–53 Fixings for ball joint clips
54 Longitudinal steering tube assembly
55 Ball joint assembly RH thread
56 Ball joint assembly LH thread
57 Rubber cover for ball joint
58 Spring ring, cover to body
59 Spring ring } Cover to ball
60 Retainer }
61–63 Fixings for ball joints to levers
64 Clip for ball joint
65–66 Fixings for ball joint clips

## Lubrication, steering box and relay unit—Operation G1-1

*(For lubrication instructions for steering ball joints, Operation G1-6 refers)*

Workshop hand tools:
Spanner sizes: 2 BA, $\frac{7}{16}$ in. AF open end

### General

No special provision is made for draining the steering box and relay unit, the lubricating oil normally lasting until time of overhaul. If significant topping up is required, check for oil leaks at joint faces, and at the steering box rocker shaft oil seal, and relay shaft oil seals.

### Steering box

1. Lift the bonnet and prop open.
2. Remove the oil filler plug from the top face of the steering box.

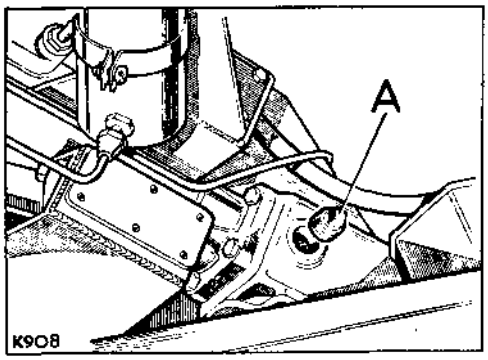


**Fig. G1-4. Oil filler hole and plug**

A—Oil filler plug

3. Using the correct grade lubricating oil, see Section X, fill the steering box to the bottom of the filler plug hole.
4. Replace the filler plug and close the bonnet.

### Steering relay unit

1. Remove the name plate and withdraw the radiator grille.
2. Remove the oil filler plug from the top of the relay unit.

   **Note:** There are two variations of oil filler in use. On the latest type, either of the four bolts securing the relay top cover can be used.

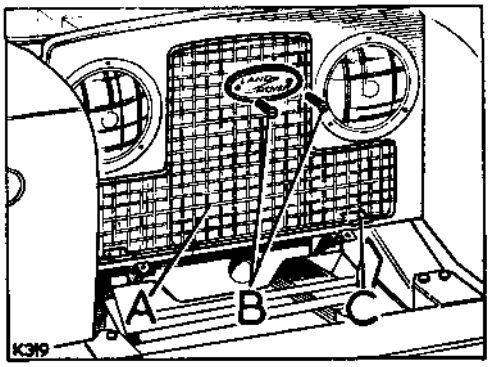


**Fig. G1-5. Radiator Grille**

A—Radiator grille
B—Fixings for name plate and grille
C—Support brackets

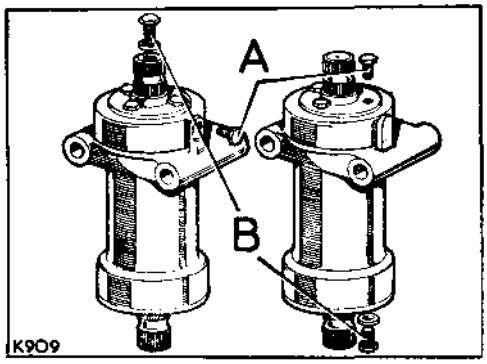


**Fig. G1-6. Oil filler and breather plugs, early and latest type**

A—Oil filler hole and plug
B—Breather hole and plug on early type. Drain plug on latest type

3. Early type relay unit—Remove the breather plug.
4. Latest type relay unit—Remove a second bolt from the top of the relay unit to provide a breather hole.
5. Using the correct grade lubricating oil, see Section X, fill the relay unit to the bottom of the filler plug hole.
6. Replace filler and breather plugs.
7. Fit the radiator grille and name plate, see Fig. G1-5.

## Front wheel alignment, to adjust—Operation G1-2

Workshop hand tools:
Spanner size: $\frac{7}{16}$ in. AF Mallet

### To check

Toe-in dimension: $\frac{1}{64}$ in. to $\frac{3}{32}$ in. (1,2 mm to 2,4 mm).

**Note:** No adjustment is provided for caster, camber or swivel pin inclination.

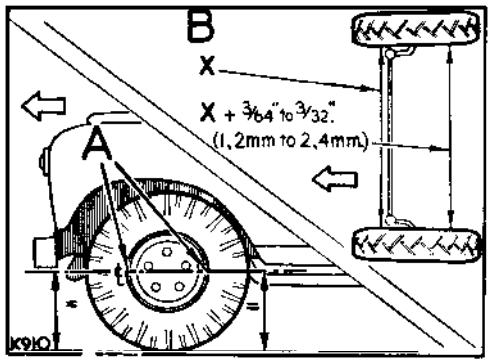


**Fig. G1-7. Front wheel toe in**

A—Check at horizontal centre line of wheel rim
B—Toe in setting

1. Set the vehicle on level ground with the road wheels in the straight-ahead position, and push it forward a short distance.
2. Measure the toe-in with the aid of a tracking stick or suitable proprietary equipment; it should be $\frac{1}{64}$ in. to $\frac{3}{32}$ in. (1,2 mm to 2,4 mm).
3. If necessary, adjust the toe in as follows:

### To adjust

1. Slacken the clamps securing the ball joints at each end of the track rod.
2. Turn the track rod to decrease or increase its effective length as necessary, until the toe in is correct.

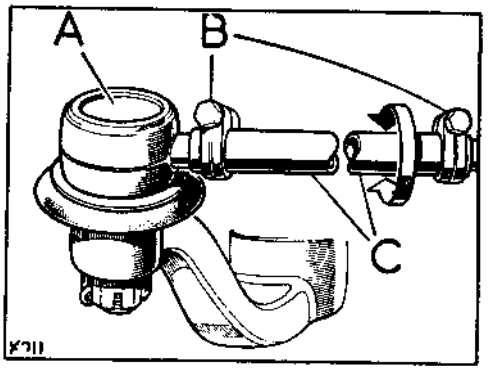


**Fig. G1-8. Track rod adjustment**

A—Ball joint
B—Clamp for ball joint
C—Track rod, turn as required

3. Push the vehicle rearwards turning the steering wheel from side to side to settle the ball joints. Then, with the road wheels in the straight ahead position, push the vehicle forward a short distance.
4. Recheck the toe in. If necessary carry out further adjustment.
5. When the toe in is correct, lightly tap the track rod ball joints in the direction indicated to the maximum of their travel, to ensure full unrestricted movement of the track rod, then secure the ball joint clamps.

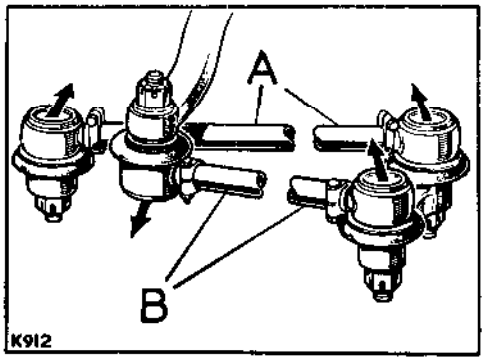


**Fig. G1-9. Setting ball joints**

A—Track rod
B—Drag link
(Set ball joints as indicated)

## Steering wheel, remove and refit—Operation G1-3

Workshop hand tools:
Spanner sizes: $\frac{1}{2}$ in. AF, 1 in. AF sockets
Screwdriver (medium)

**Note:** Two types of steering wheel are in use, utilising different fixings.

### To remove early type

1. If the electric horn push is fitted to the steering wheel centre, disconnect the battery to prevent the possibility of an electrical short, then disconnect the horn lead from the snap connector at the dash panel.

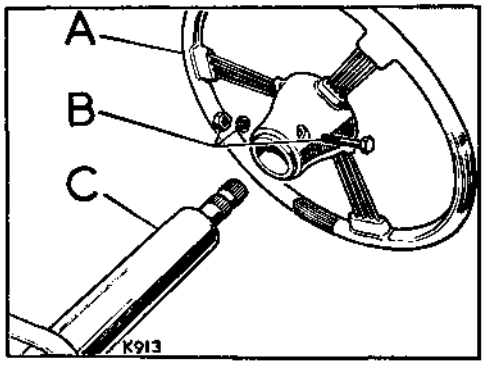


**Fig. G1-10. Early type steering wheel**
A—Steering wheel
B—Fixings, steering wheel to column
C—Steering column

2. Remove the fixings and withdraw the steering wheel from the splined column.

### To remove, latest type

1. Disconnect the battery to prevent the possibility of an electrical short.
2. Disconnect the horn push lead from the snap connector at the dash panel
3. Prise the centre cover from the steering wheel and disconnect the horn push leads.
4. Remove the fixings and withdraw the steering wheel from the splined column.

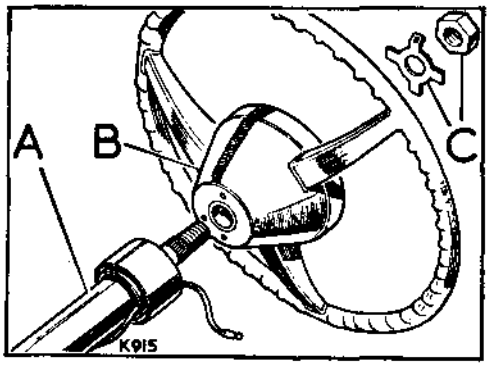


**Fig. G1-12. Latest type steering wheel**
A—Steering column
B—Steering wheel
C—Fixings, steering wheel to column

### To refit, early type

1. Turn the inner steering column lock-to-lock and select the Intermediate position (front road wheels straight ahead).
2. Fit the steering wheel with the fixing bolt and nut to the rear and one of the series of spokes pointing forward.

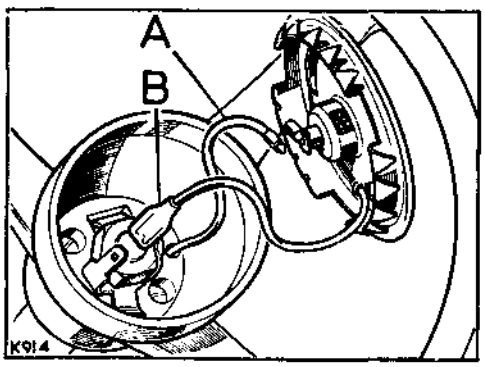


**Fig. G1-11. Electrical leads for horn push**
A—Connection at horn push
B—Connection at steering wheel

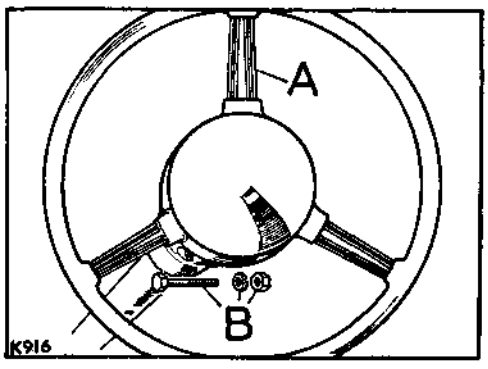


**Fig. G1-13. Steering wheel location**
A—Spoke facing forward
B—Fixing bolt at rear

## Operation G1-3—*continued*

3. If the electric horn push is fitted to the steering wheel centre, connect the horn lead to the snap connector at the dash panel.
4. Reconnect the battery.

### To refit, latest type

1. Turn the inner steering column lock-to-lock and select the intermediate position (front road wheels straight ahead).
2. Ensure that the special spring washer for the steering wheel is in place on the steering column, then fit the steering wheel with spokes pointing to each side and to the rear. Fit the securing nut, recessed side first, and tighten to a torque figure of 40 lb. ft. (5,4 mkg).

   **Note:** If the steering wheel securing nut does not have a recess, it should be replaced with the latest recessed type, to ensure that it clears the protruding splines on the inner column and securely clamps the steering wheel.

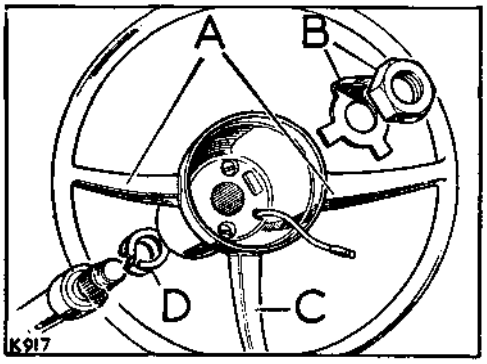


**Fig. G1-14. Steering wheel location**

A—Spokes facing sideways
B—Fixings for steering wheel
C—Spoke facing rearward
D—Special spring washer

3. Connect the horn push leads to the tag washer and steering wheel centre and fit the centre to the steering wheel, see Fig. G1-11.
4. Connect the horn push lead to the snap connector at the dash panel.
5. Reconnect the battery.

## Steering track rod and drag link, remove and refit—Operation G1-4

*(For ball joint servicing instructions, Operation G1-6 refers)*

Workshop hand tools:
Spanner sizes: $\frac{7}{16}$ in. BSF, $\frac{7}{16}$ in. AF open end
Pliers, Screwdriver (small)

Special tools:
Tool for extracting ball joints, Part No. 600590

### General

From axles numbered:
141107339 88 RHStg
144104520 88 LHStg
151108875 109 RHStg
154103275 109 LHStg onwards

the steering levers are fitted to the bottom of the swivel housings with the ball joints above the levers.

**Note:** On all models, the ball joint at the relay lever end of the drag link is fitted below the lever.

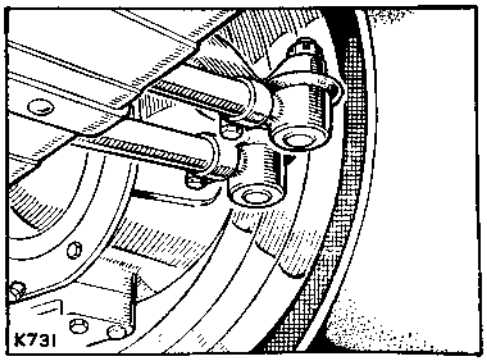


**Fig. G1-15. Early type pendant ball joint**

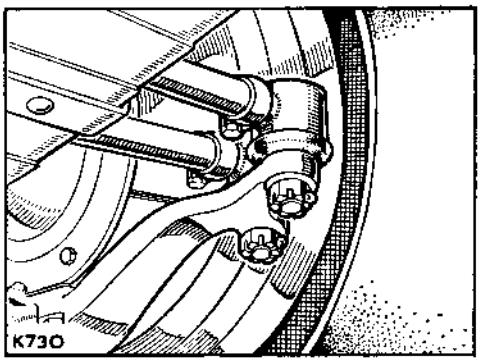


**Fig. G1-16. Latest type non-pendant ball joint**

Swivel pin and steering levers are not interchangeable as individual items; they can, however, be fitted in pairs provided either the swivel pin housing complete is changed for the latest type, or studs are fitted in the bottom position of the existing swivel pin housing. Studs required are 6 off 508152, 2 off 508153.

It is most important that the latest type steering levers are not fitted to an early type housing in the lower position with the existing bolts; the studs detailed above including the special fitting studs 508153 must be fitted. This prevents any tendency for movement between lever and housing which could give rise to premature breakage of the bolts with the possibility of serious damage.

### To remove

**Note:** If the drag link is being removed, jack up the front of the vehicle and remove the front wheel from the side where the drag link is connected to the swivel pin steering lever.

If the track rod is being removed, support the vehicle on stands and remove both front wheels.

1. Remove the fixings from the ball joints at each end of the track rod or drag link, as required.

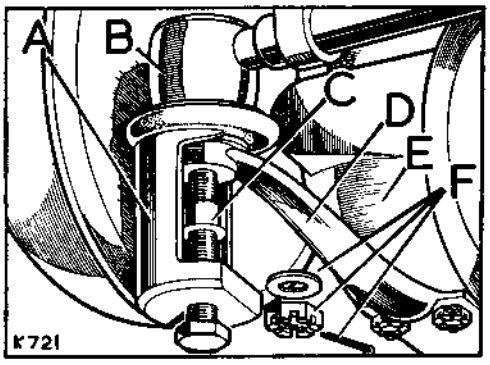


**Fig. G1-17. Track rod and drag link connections at swivel pin housings**

A—Special tool, Part No. 600590
B—Ball joint
C—Thread protection cap, part of 600590
D—Steering lever
E—Swivel pin housing
F—Fixings, ball joint to steering lever

## Operation G1-4—*continued*

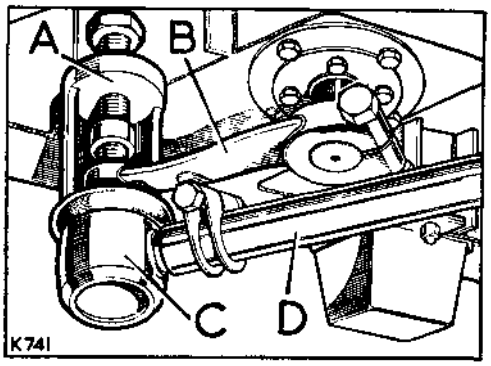


**G1-18. Steering relay connection**

A—Special tool, Part No. 600590
B—Lower relay lever
C—Ball joint
D—Steering drag link

2. Using special tool Part No. 600590, extract the ball joints and lift the track rod or drag link clear.

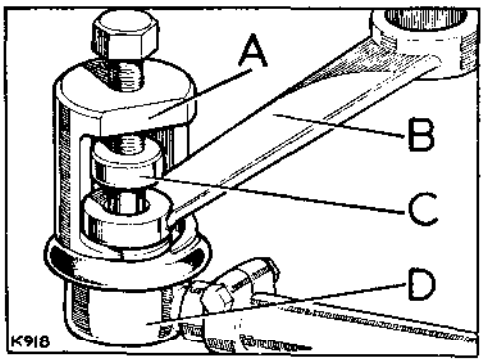


**Fig. G1-19. Extracting ball joint**

A—Special tool, Part No. 600590
B—Steering lever
C—Thread protection cap (Part of 600590)
D—Ball joint

3. If required, slacken the clamps at each end of the track rod or drag link, and unscrew the ball joints, noting that one of the ball joints in each case has a **left hand** thread.
4. Withdraw the clamps from the track rod or drag link.

### To refit

1. Fit the clamps at each end of the track rod or drag link, but do not secure the fixings.
2. Screw the ball joints into the track rod or drag link, noting that one ball joint in each case has a **left hand** thread.

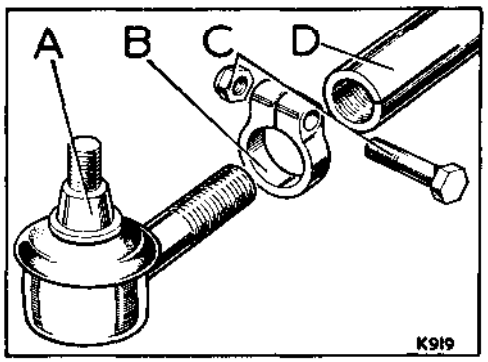


**Fig. G1-20. Fitting ball joint**

A—Ball joint
B—Clamp
C—Fixings for clamp
D—Track rod or drag link

3. Fit the drag link between the lower relay lever and the steering lever see Fig. G1-18. If necessary, turn the drag link to adjust the overall length, so that the front wheel is in the straight ahead position when the steering wheel is in the intermediate position. Tighten the ball joint fixing nuts to a torque figure of 30 lb. ft. (4,0 mkg).

## Operation G1-4—*continued*

4. Using a mallet, lightly tap the ball joint cups in the direction indicated to the maximum of their travel, to ensure full unrestricted movement of the drag link, then secure both ball joint clamps.

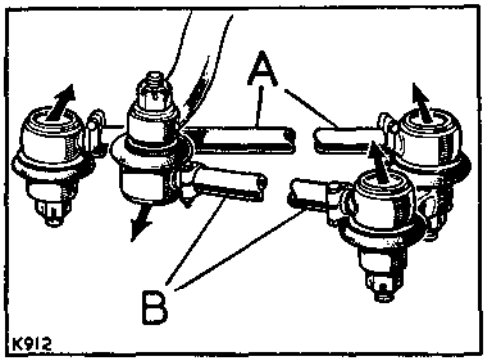


**Fig. G1-21. Setting ball joints**

A—Track rod
B—Drag link
(Set ball joints as indicated)

5. Fit the track rod between the steering levers, see Fig. G1-17. Tighten the ball joint fixing nuts to a torque figure of 30 lb. ft. (4,0 mkg).
6. Fit the front road wheels.
7. Check, and if necessary, adjust the wheel alignment, Operation G1-2, but do not secure the ball joint clamps.
8. Using a mallet, lightly tap the ball joint cups in the direction indicated to the maximum of their travel, to ensure full unrestricted movement of the track rod, see Fig. G1-21, then secure both ball joint clamps.

## Longitudinal steering arm, remove and refit—Operation G1-5

*(For ball joint servicing Instructions, Operation G1-6 refers)*

Workshop hand tools:
Spanner sizes: $\frac{7}{16}$ in. BSF, $\frac{7}{16}$ in. AF, $\frac{5}{8}$ in. AF, $\frac{11}{16}$ in. AF open end
Pliers, Screwdriver (small and large)

Special tools:
Tool for extracting ball joints Part No. 600590

### To remove

1. Remove the spare wheel if mounted on the bonnet, disconnect the prop rod and hinge fixings, then lift the bonnet clear.

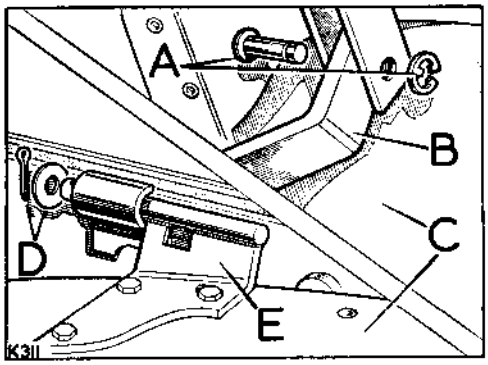


**Fig. G1-22. Fixings, bonnet panel**

A—Prop rod fixings
B—Prop rod
C—Bonnet panel
D—Hinge fixings, RH side only
E—Bonnet hinge

2. RHStg models only—Remove the air cleaner (see Section A for further details, if required).

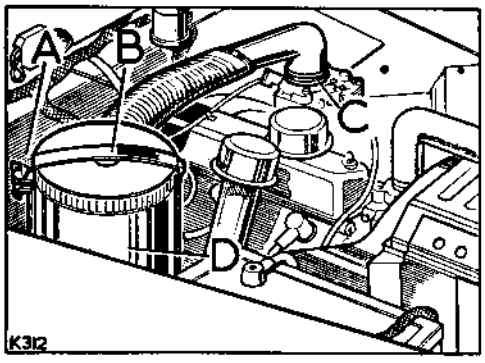


**Fig. G1-23. Air cleaner and elbow fixings**

A—Retaining strap fixings
B—Retaining strap for air cleaner
C—Elbow fixings
D—Air cleaner

**Note:** The foregoing operation is not necessary on certain models, where the air cleaner does not obstruct access to the steering box.

3. Remove the name plate and withdraw the radiator grille.

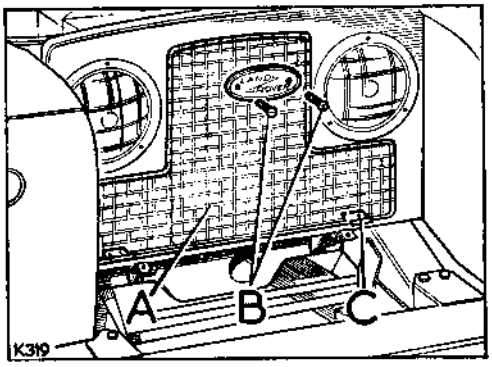


**Fig. G1-24. Radiator grille fixings**

A—Radiator grille
B—Fixings, for name plate and grille
C—Support brackets

4. Remove the fixings securing the upper relay lever to the relay unit and prise the lever clear.

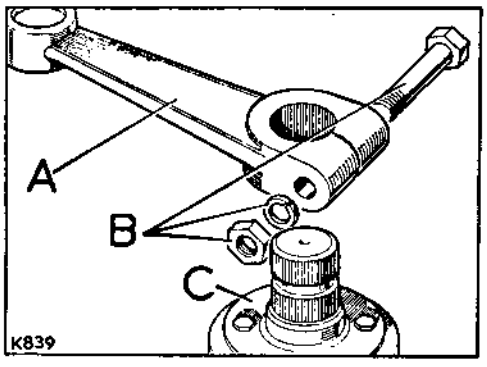


**Fig. G1-25. Upper relay lever**

A—Relay lever
B—Fixings, lever to relay unit
C—Relay unit

## Operation G1-5—*continued*

5. Remove the fixings from the ball joint connecting the longitudinal arm to the steering box drop arm.

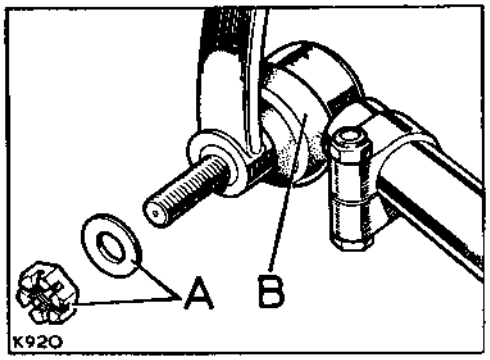


**Fig. G1-26. Ball joint fixings**
A—Fixings for ball joint
B—Ball joint

6. Using special tool, Part No. 600590, extract the ball joint from the steering box drop arm.

**Note:** LHStg models—It may be necessary to remove the exhaust manifold to provide access for the ball joint extractor.

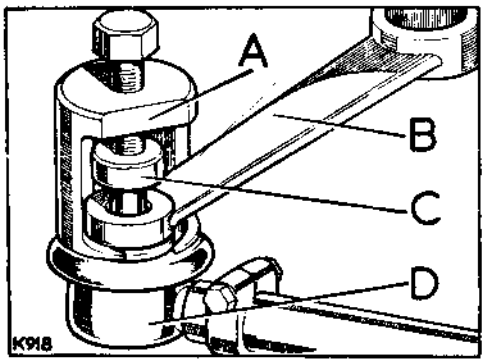


**Fig. G1-27. Extracting ball joint**
A—Special tool, Part No. 600590
B—Steering drop arm
C—Thread protection cap (part of 600590)
D—Ball joint

7. Manoeuvre the end of the upper relay lever through the aperture in the grille panel, then moving the steering box drop arm fully forward, carefully withdraw the upper relay lever and longitudinal arm assembly.

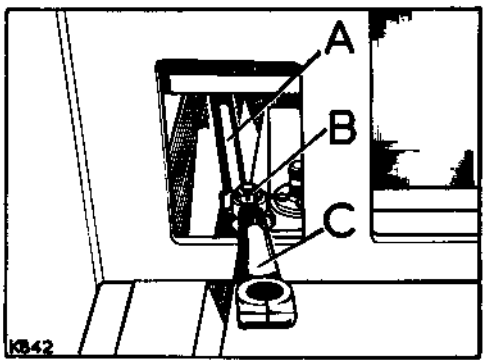


**Fig. G1-28. Withdrawing longitudinal arm**
A—Longitudinal arm
B—Ball joint
C—Upper relay lever

8. Remove the fixings and extract the ball joint from the upper relay lever.
9. If required, slacken the clamps at each end of the longitudinal arm and unscrew the ball joints, noting that one of the ball joints has a **left hand** thread.
10. Withdraw the clamps from the longitudinal arm.

### To refit

1. Fit the clamps at each end of the longitudinal arm, but do not secure the fixings.

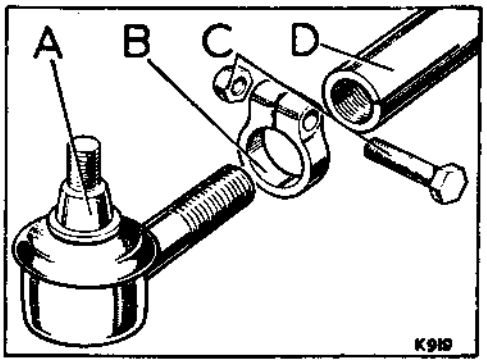


**Fig. G1-29. Fitting ball joint**
A—Ball joint
B—Clamp
C—Fixings for clamp
D—Longitudinal arm

## Operation G1-5—*continued*

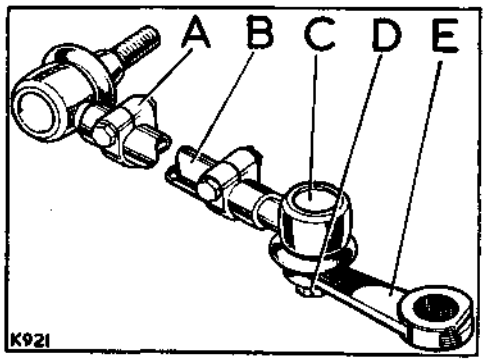


**Fig. G1-30. Longitudinal arm assembly**

A—Clamp for ball joint
B—Longitudinal arm
C—Ball joint
D—Fixings, ball joint to relay lever
E—Upper relay lever

2. Screw the ball joints into the longitudinal arm, noting that one ball joint has a **left hand** thread.
3. Secure the upper relay lever to the longitudinal arm. The lever may be fitted to either end of the arm. Tighten the ball joint securing nut to a torque figure of 30 lb. ft. (4,0 mkg).
4. Insert the longitudinal arm assembly along the top of the chassis side member, locate and secure the ball joint to the steering box drop arm, see Fig. G1-27. Tighten the ball joint fixing nut to a torque figure of 30 lb. ft. (4,0 mkg).
5. Place the front wheels in the straight ahead position and the steering wheel in the intermediate position, then connect the upper relay lever to the relay unit, the longitudinal arm may require adjusting slightly to align the splines of the relay lever and unit. Tighten the pinch bolt to a torque figure of 55 lb. ft. (7,6 mkg).

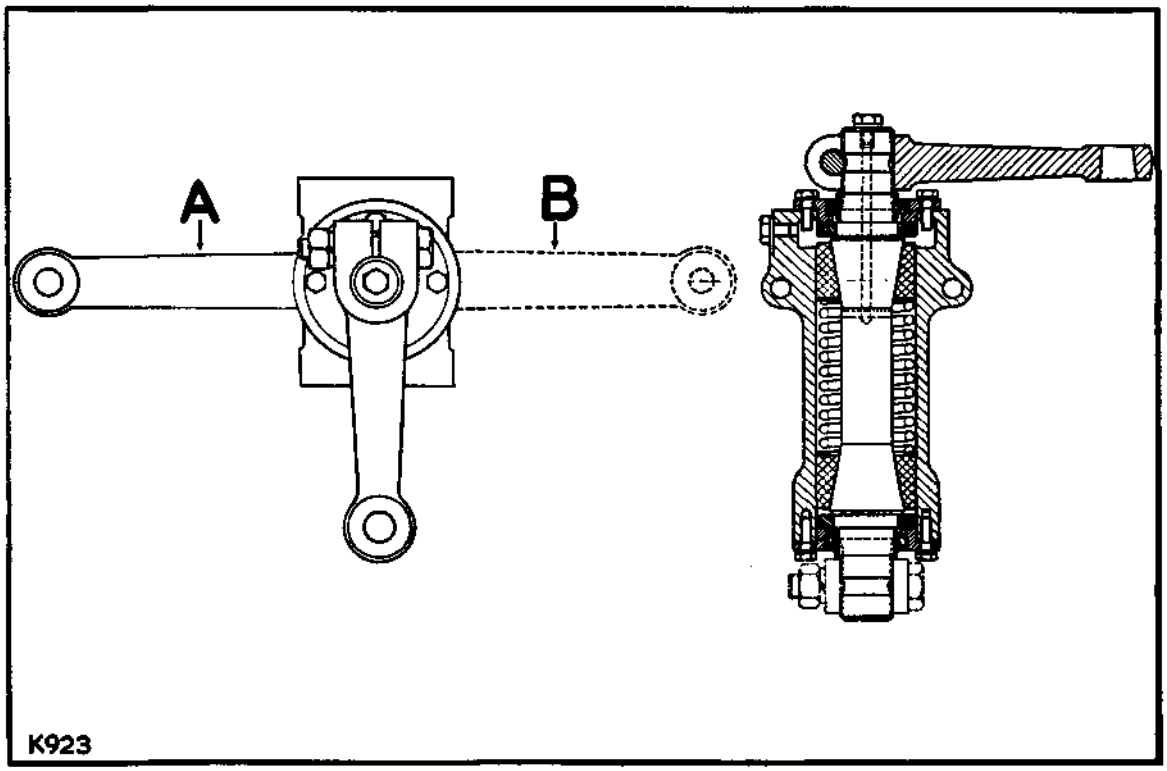


**Fig. G1-31. Location of relay levers**

A—Lower relay lever, LHStg models B—Lower relay lever, RHStg models

## Operation G1-5—*continued*

6. Using a mallet, lightly tap the ball joint cups in the direction indicated to the maximum of their travel, to ensure full unrestricted movement of the longitudinal arm, then secure both ball joint clamps.

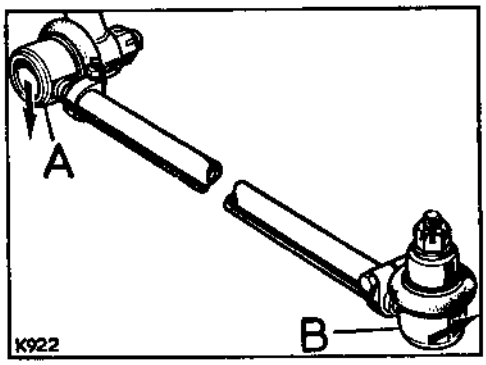


**Fig. G1-32. Setting ball joints**

A—Ball joint at drop arm
B—Ball joint at relay lever
Set ball joints as indicated)

7. Check the steering, lock-to-lock, for correct functioning. If necessary, adjust the overall length of the longitudinal arm by slackening the ball joint clamps and screwing the arm in or out, as required, then secure the clamps.

   **Caution:** DO NOT allow the longitudinal arm to rub the brake pipe. Place the steering in the straight ahead position and check the clearance between the arm and pipe. RHStg models must have 1 in. (25 mm) minimum clearance and LHStg models must have ½ in. (12 mm) minimum clearance. If necessary, bend the brake pipe away from the longitudinal arm to provide the correct clearance.

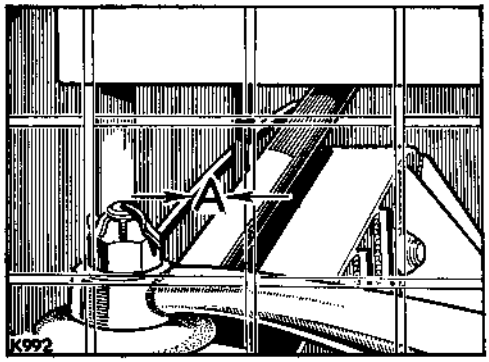


**Fig. G1-33. Clearance of brake pipe, RHStg models**

A—Ensure that there is 1 in. (25 mm) minimum clearance at this point

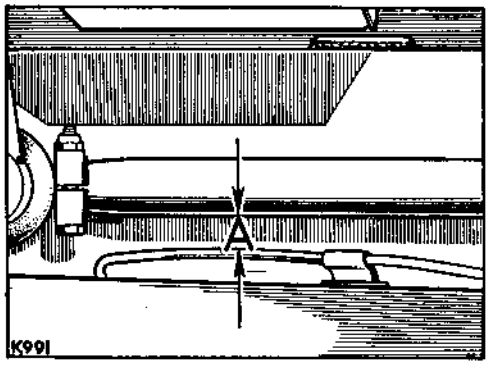


**Fig. G1-34. Clearance of brake pipe, LHStg models**

A—Ensure that there is ½ in. (12 mm) minimum clearance at this point

8. Fit the radiator grille and name plate, see Fig. G1-24.
9. If removed, fit the air cleaner, see Fig. G1-23.
10. Fit the bonnet, see Fig. G1-22.

# Ball joints, to check and lubricate—Operation G1-6

## General

The steering ball joints have been designed in such a way as to retain the initial filling of grease for the normal life of the ball joint; however, this applies only if the rubber boot remains in position on the joint. The rubber boots should be checked every 3,000 miles (5.000 km) to ensure that they have not become dislodged or the joint damaged. Should any of the rubber boots be dislodged, proceed as follows:

## Procedure

1. Remove the ball joints from the longitudinal arm, track rod and drag link, as required. Operations G1-4 and G1-5.

   **Note:** If only one ball joint requires attention, it is only necessary to disconnect the applicable end of arm.

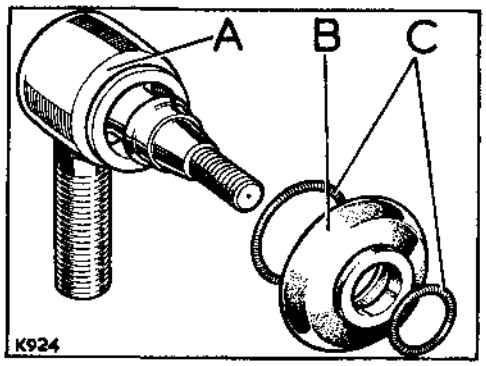


**Fig. G1-35. Ball joint and cover**

A—Ball joint
B—Rubber cover
C—Spring rings

2. Remove the rubber cover.
3. Thoroughly clean all parts.
4. Place the castle nut upside down on the pin and screw on a few threads, then place the ball joint under a press or between the jaws of a vice and carefully force the pin and ball down against the spring. In this position the interior of the ball joint can be cleaned and lubricated.
5. Apply grease around the taper, and fill the rubber boot.

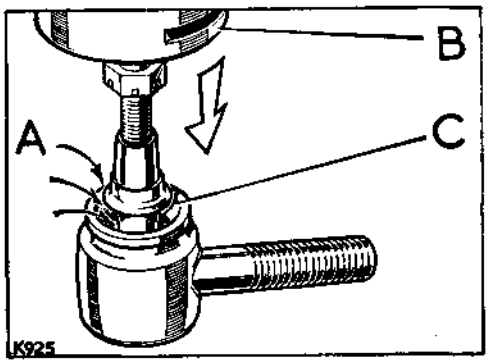


**Fig. G1-36. Lubricating ball joint**

A—Insert grease as indicated
B—Mandrel press
C—Ball joint

6. Reassemble, using new rubbers and spring rings as required.
7. Fit the ball joints to the vehicle. Operations G1-4 and G1-5.
8. If necessary, adjust the wheel alignment. Operation G1-2.

## Steering box, remove and refit—Operation G1-7

*(For overhaul instructions, Operation G1-8 refers)*

Workshop hand tools:
Spanner sizes: $\frac{7}{16}$ in. AF, $\frac{9}{16}$ in. AF, $\frac{5}{8}$ in. AF, open end, $\frac{9}{16}$ in. AF, $1\frac{1}{8}$ in. AF sockets
Screwdriver (medium)

Special tools:
Tool for extracting steering box drop arm
Part No. 600000

### To remove

1. Remove the spare wheel if mounted on the bonnet, disconnect the prop rod and hinge fixings, then lift the bonnet clear.

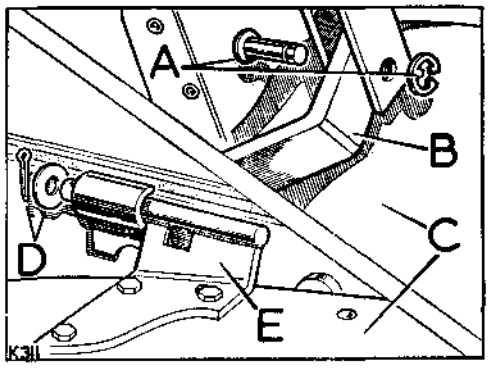


**Fig. G1-37. Fixings, bonnet panel**

A—Prop rod fixings
B—Prop rod
C—Bonnet panel
D—Hinge fixings. RH side only
E—Bonnet hinge

2. RHStg models only—Remove the air cleaner (see Section A for further details if required).

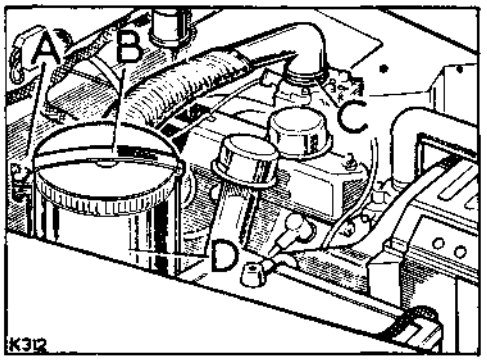


**Fig. G1-38. Air cleaner and elbow fixings**

A—Retaining strap fixings
B—Retaining strap for air cleaner
C—Elbow fixings
D—Air cleaner

**Note:** The foregoing operation is not necessary on certain models, where the air cleaner does not obstruct access to the steering box.

3. Remove the name plate and withdraw the radiator grille.

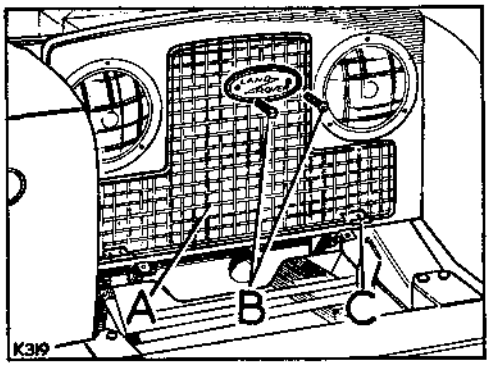


**Fig. G1-39. Radiator grille fixings**

A—Radiator grille
B—Fixings for name plate and grille
C—Support brackets

4. Remove the steering wheel. Operation G1-3.
5. Remove the longitudinal steering arm. Operation G1-5.

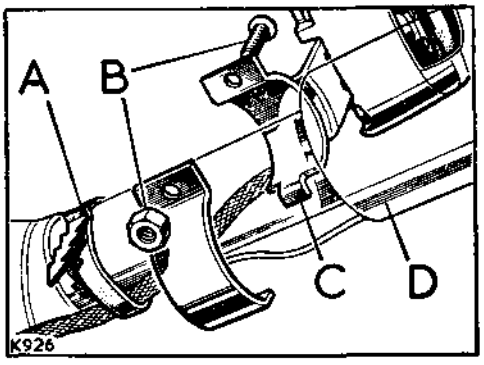


**Fig. G1-40. Flasher switch**

A—Clip, leads to steering column
B—Fixings, flasher switch
C—Flasher switch
D—Steering column

## Operation G1-7—*continued*

6. Release the flasher switch, or horn push and support bracket on early models, from the steering column. The switch can be placed on the dash panel shelf without disconnecting the leads.
7. Remove the clamp and seal from the steering column and dash support bracket.

   **Note:** On early models, the dash support bracket also forms the top half of the clamp, and the bracket must be removed.
8. LHStg, 2¼ litre petrol engine models only—Disconnect the throttle linkage.

   **Note:** LHStg models fitted with a heat shield at the exhaust manifold. If necessary, remove the heat shield to provide access to the fixings for the steering box stiffener bracket.
9. Remove the fixings between the steering box stiffener bracket and the toe box.

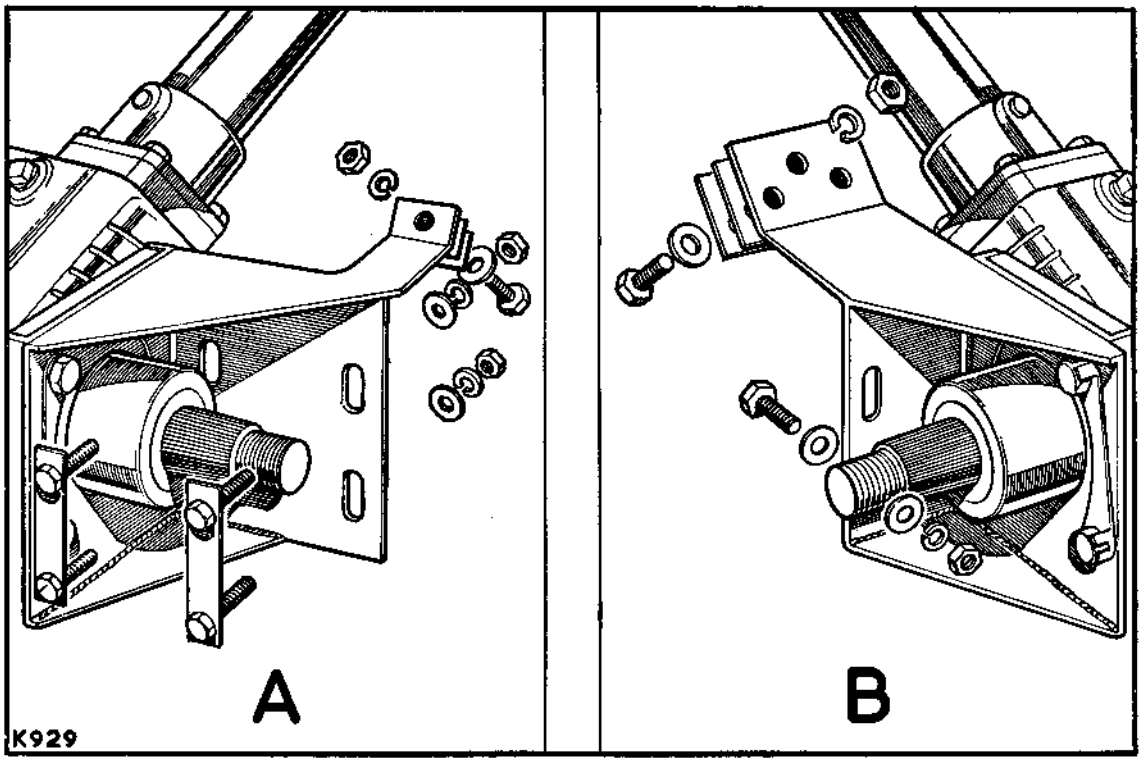


**Fig. G1-41. Fixings, stiffener bracket to toe box**

A—RHStg models
B—LHStg models

## Operation G1-7—*continued*

10. Slacken the fixings at the front road wheel on the steering box side of the vehicle.

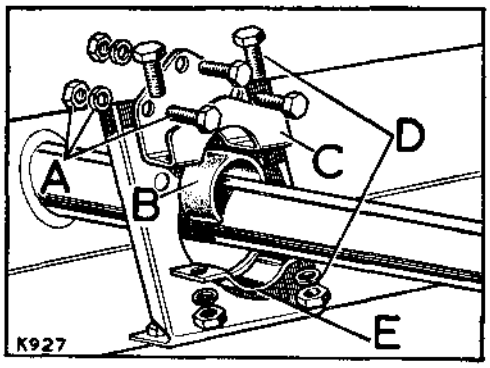


**Fig. G1-42. Clamp and seal for steering column**

A—Fixings at dash support bracket
B—Seal for clamp
C—Clamp, upper half
D—Fixings, clamp halves
E—Clamp, lower half

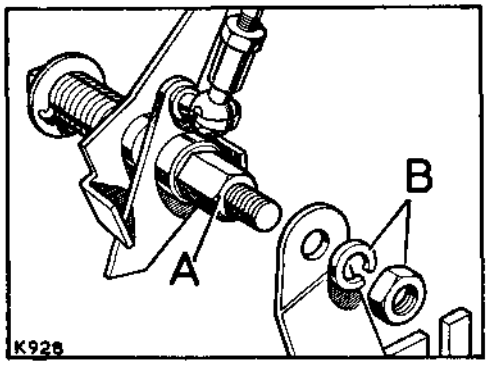


**Fig. G1-43. Throttle linkage**

A—Throttle linkage
B—Fixings

11. Jack up the front of the vehicle and support on stands, then remove the road wheel.
12. Remove the steering unit cover box from under the front wing.
13. Remove the fixings between support bracket for the steering box and the toe box, wing valance and chassis.

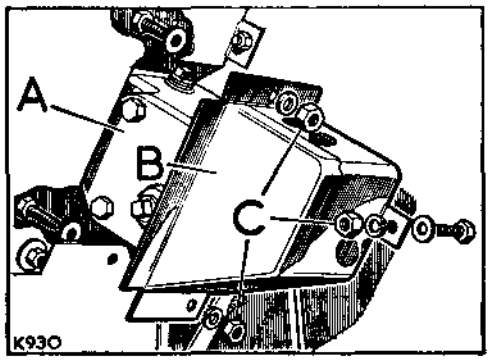


**Fig. G1-44. Fixings for cover box**

A—Steering box
B—Cover box
C—Fixings at toe box and wing valance

14. Withdraw the steering box and column assembly, complete with the support bracket, stiffener bracket and drop arm, from under the front wing.

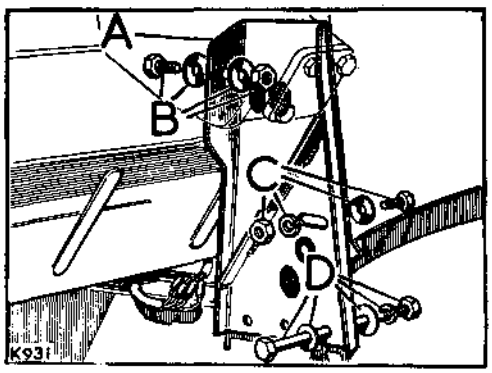


**Fig. G1-45. Fixings for support bracket**

A—Support bracket
B—Fixings at toe box
C—Fixings at wing valance
D—Fixings at chassis

## Operation G1-7—*continued*

15. Remove the fixings and extract the drop arm, using special tool Part No. 600000.

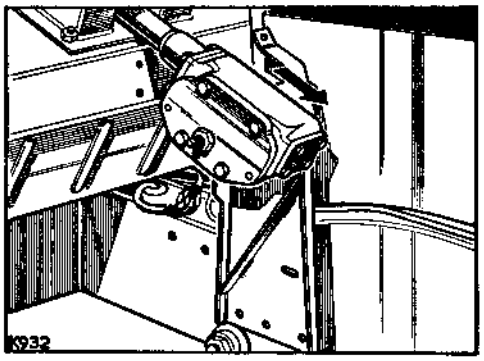


**Fig. G1-46. Withdrawing steering box assembly**

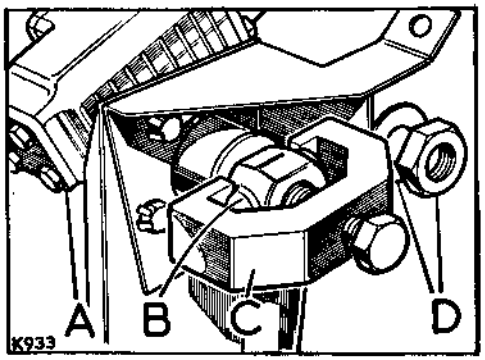


**Fig. G1-47. Removing drop arm**

A—Steering box
B—Drop arm
C—Special tool Part No. 600000
D—Fixings for drop arm

If required, remove the support and stiffener brackets from the steering box.

**Note:** The steering box can be overhauled without removing the support and stiffener brackets.

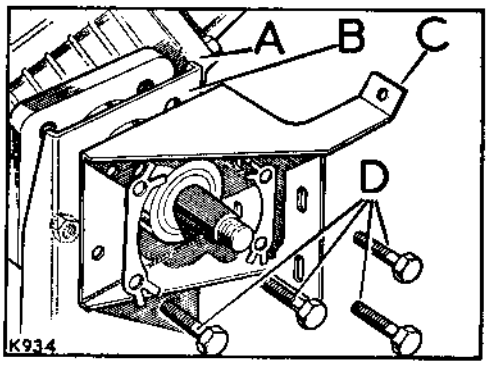


**Fig. G1-48. Support and stiffener brackets**

A—Steering box
B—Support bracket
C—Stiffener bracket
D—Fixings for brackets

### To refit

1. If removed, fit the support and stiffener brackets to the steering box. Tighten the securing bolts to a torque figure of 30 lb ft and engage the lock plates.

2. Locate the steering box and bracket assembly, less drop arm, in position on the vehicle. Retain the support bracket to the chassis, wing valance and toe box, but do not fully tighten the fixings at this stage.

3. Retain the steering box stiffener bracket to the toe box, but do not fully tighten the fixings at this stage. If necessary, fit shim washers between the stiffener bracket and the top face of the toe box to prevent distorting the toe box or bracket.

**Caution:** During the next item, DO NOT strain the steering column. If necessary, adjust the steering box position, using the slotted fixing holes in the support and stiffener brackets, to obtain a snug fit between the clamp upper half and the steering column, before securing the clamp halves.

## Operation G1-7—*continued*

4. Fit the seal and clamp to the steering column and dash support bracket, see Fig. G1-42.

   **Note:** On early models, fit the dash support which forms the top half of the clamp.

5. Secure the support and stiffener bracket fixings. Tighten the support bracket to chassis fixing bolts to a torque figure of 15 lb ft (2,0 mkg), see Fig. G1-41 and G1-45.
6. Fit the steering unit cover box, see Fig. G1-44.
7. Fit the road wheel and lower the vehicle to the floor. Fully tighten the road wheel fixings.
8. LHStg, 2¼ litre petrol models only—Connect the throttle linkage, see Fig. G1-43.
9. If removed, fit the heat shield to the exhaust manifold.
10. Fit the flasher switch, or horn push and support bracket on early models, to the steering column, see Fig. G1-40.
11. Fit the steering wheel. Operation G1-3. Latest type steering wheel secured with a nut and tag washer, tighten the nut to a torque figure of 40 lb ft. (5,4 mkg).
12. Fit the steering box drop arm to the longitudinal arm and relay lever assembly. Tighten the ball joint securing nut to a torque figure of 30 lb ft (4,0 mkg).

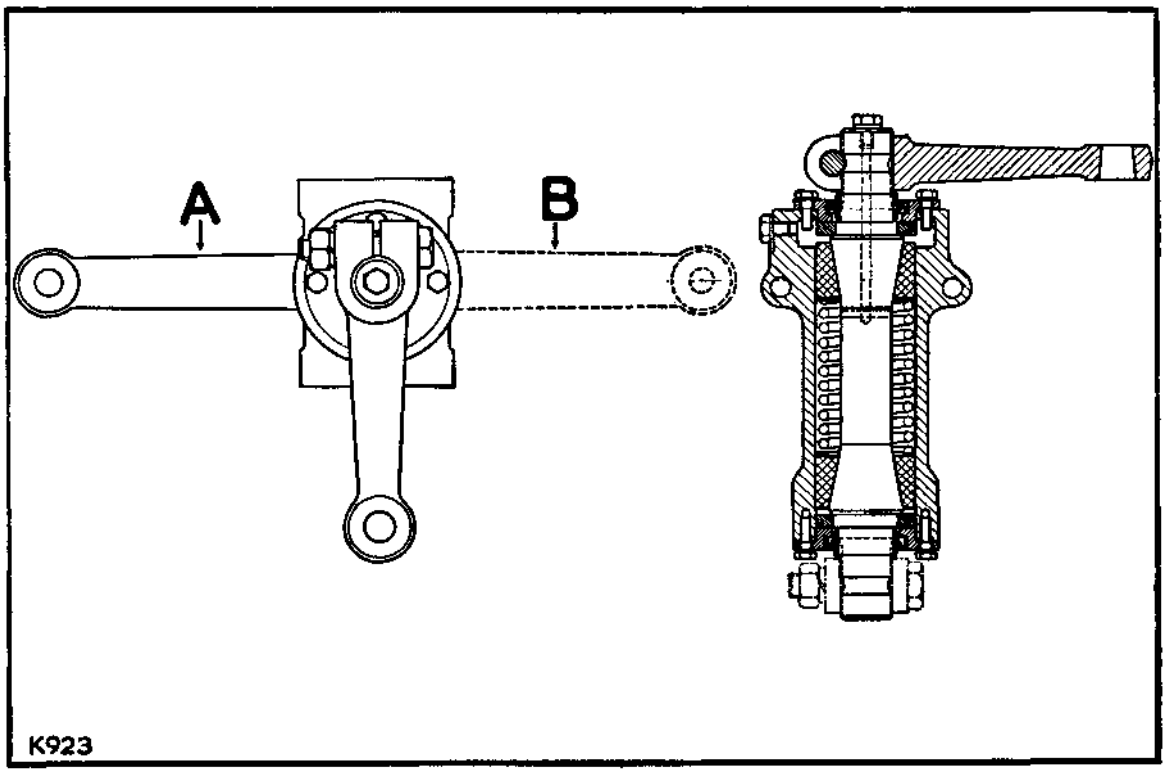


**Fig. G1-49. Location of relay levers**
A—Lower relay lever, LHStg models
B—Lower relay lever, RHStg models

## Operation G1-7—*continued*

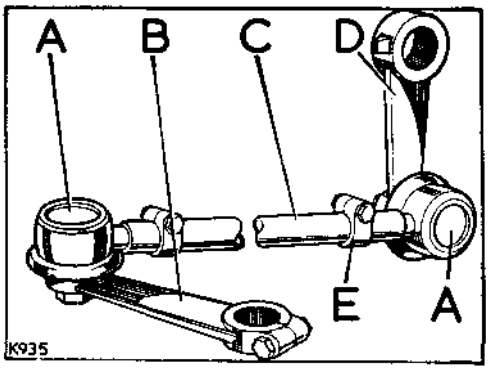


**Fig. G1-50. Longitudinal arm assembly**

A—Ball joint
B—Relay lever, upper
C—Longitudinal arm
D—Drop arm
E—Clip for ball joint

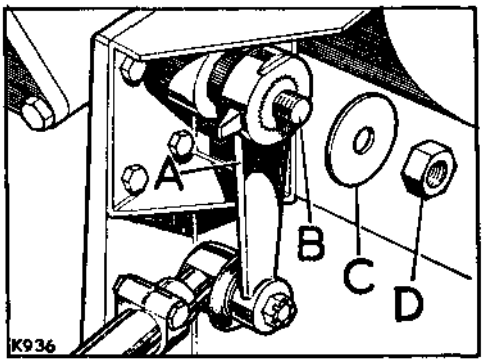


**Fig. G1-51. Drop arm fixings**

A—Drop arm
B—Rocker shaft
C—Lockwasher
D—Nut fixing drop arm

13. Insert the longitudinal arm assembly along the top of the chassis side member. Connect the upper relay lever to the relay unit, tighten the pinch bolt to a torque figure of 55 lb ft (7,6 mkg).
14. Place the front wheels in the 'straight ahead' position and the steering wheel in the intermediate position, then fit the drop arm to the rocker shaft. The longitudinal arm may require adjusting slightly to align the splines of the drop arm and rocker shaft. Tighten the drop arm securing nut to a torque figure of 60 to 80 lb ft (8,5 to 11,0 mkg), then engage the lockwasher.
15. Check the steering, lock-to-lock, for correct functioning. If necessary, adjust the overall length of the longitudinal arm assembly by screwing the arm and ball joints in or out, as required.
16. Fit the radiator grille and name plate, see Fig. G1-39.
17. If removed, fit the air cleaner, see Fig. G1-38.
18. Fit the bonnet, see Fig. G1-37.

## Steering box, overhaul—Operation G1-8

*(For removal and refitting instructions, Operation G1-7 refers)*

Workshop hand tools:
Spanner sizes: $\frac{3}{8}$ in. AF, $\frac{1}{2}$ in. AF, $\frac{13}{16}$ in. AF open end
Mallet, Screwdriver (medium)

### To dismantle

1. Remove the side cover and drain the oil from the steering box.

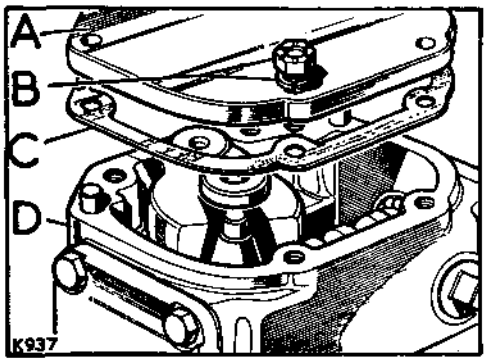


**Fig. G1-52. Side cover**

A—Side cover
B—Fixings for side cover
C—Joint washer for side cover
D—Steering box

2. Lift out the roller for the main nut, and withdraw the rocker shaft.

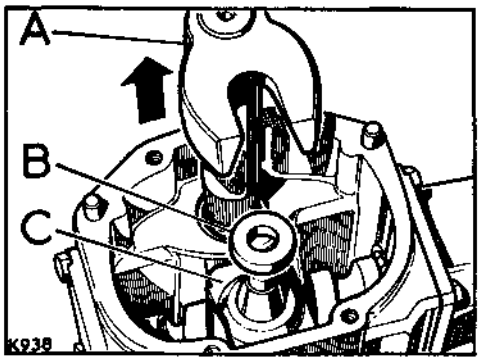


**Fig. G1-53. Rocker shaft**

A—Rocker shaft
B—Roller for main nut
C—Main nut

3. Hold the outer column in a vice and remove the fixings securing the steering box, then, using a mallet, tap the inner column at the steering wheel end to partially remove the box.

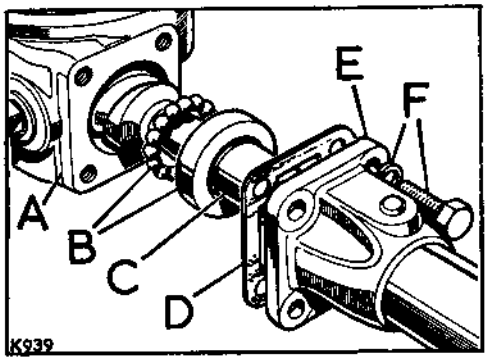


**Fig. G1-54. Steering box and column**

A—Steering box
B—Bearing, upper, for steering column
C—Inner column
D—Joint washer
E—Outer column
F—Fixings for steering box

4. Withdraw the box and inner column complete. Take care not to loose any of the steel balls from the steering box bearings, or on early models, the dust cover from the top of the steering column.

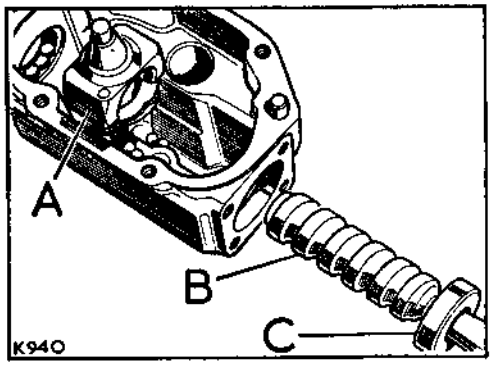


**Fig. G1-55. Inner column**

A—Main nut
B—Worm shaft
C—Upper ball race

## Operation G1-8—*continued*

5. Rotate the inner column to locate the main nut in the mid-way position on the worm shaft. Then, using a mallet, gently tap the box away from the inner column sufficient to remove the upper ball race. Take care not to loose the steel balls which will be released from the bearings.
6. Wind the worm shaft through the main nut, remove the shaft, main nut and any loose steel balls.
7. Remove the end cover, shims and lower ball race.

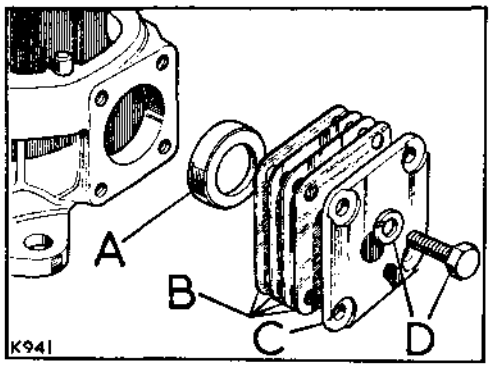


**Fig. G1-56. End cover**
A—Lower ball race
B—Shims
C—End cover
D—Fixings for end cover

8. Remove the twelve $\frac{3}{8}$ in. diameter ball bearings from the main nut and recirculating tube, by tapping the top face of the nut on a wooden block.

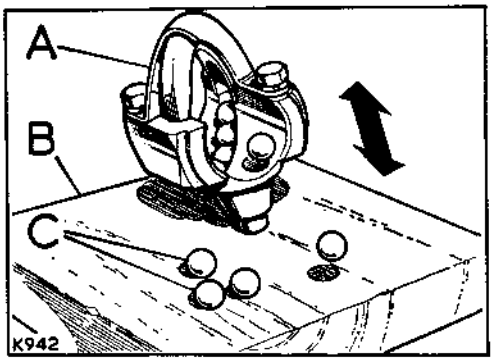


**Fig. G1-57. Removing ball bearings from main nut**
A—Main nut
B—Wooden block
C—Ball bearings

9. If necessary, remove the retaining washer and oil seal, and press out the rocker shaft bush from the box.

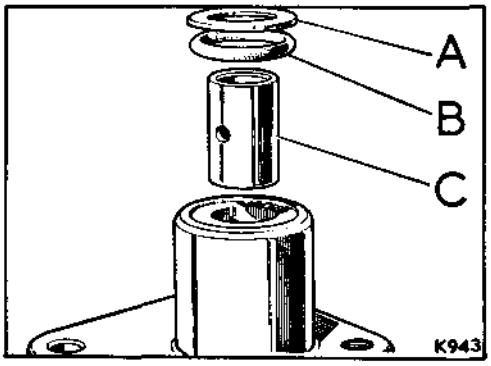


**Fig. G1-58. Bush and seal for rocker shaft**
A—Retaining washer
B—Oil seal
C—Bush

10. If necessary, remove ball bearing, or on early models the bush and seal, from the top end of the outer column.

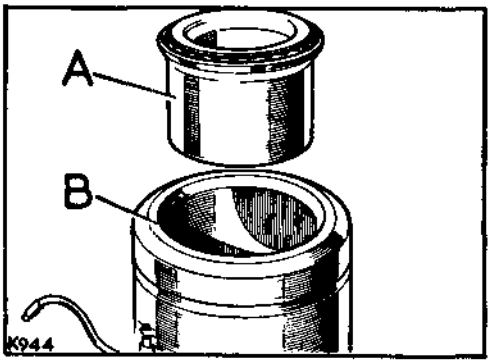


**Fig. G1-59. Bearing for outer column**
A—Ball bearing
B—Outer column

## Operation G1-8—*continued*

### Inspection

1. Examine all components for obvious signs of wear or damage.
2. Examine the main nut ball bearing track for evidence of indentations or scaling.
3. Examine the worm shaft for similar markings. Slight indentations at the extreme end of the shaft can be disregarded as this is a normal wear condition, but if indentations have spread to the middle of the shaft, a new replacement must be fitted.

### To assemble

1. Press the ball race, or on early models the bush and seal, into the top of the outer steering column tube.

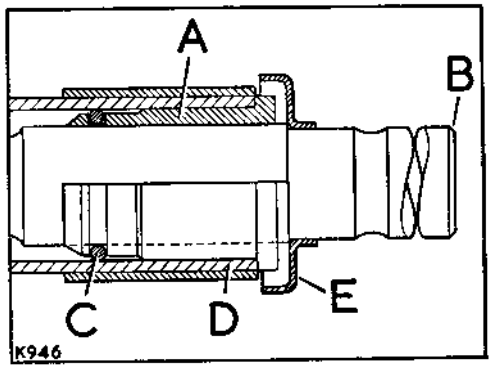


**Fig. G1-60. Sectioned view of early type column top**

A—Bush
B—Inner column
C—Seal
D—Outer column
E—Dust cover

2. Press the rocker shaft bush into the steering box, then fit the rocker shaft oil seal and retaining washer.
3. Smear both sides of the joint washer with a general purpose grease and place it in position on the flange at the lower end of the outer column, then hold the outer column in a vice, flange end uppermost.
4. Place the upper ball race, less ball bearings, in position on the inner column and slide the inner column into the outer column.

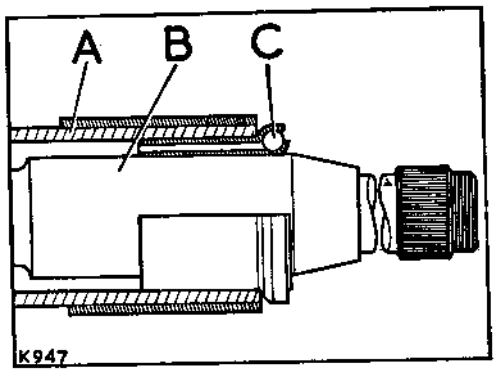


**Fig. G1-61. Sectioned view of latest type column top**

A—Outer column
B—Inner column
C—Ball bearing

5. Raise the inner steering column slightly, grease the ball race and insert the ten .280 in. diameter steel balls, then lower the inner column again ensuring all balls remain in position and that none have fallen inside the outer column.

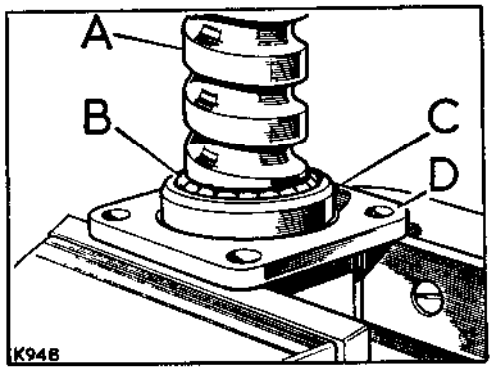


**Fig. G1-62. Upper ball race assembly**

A—Inner steering column
B—Ball bearings
C—Upper ball race
D—Outer steering column

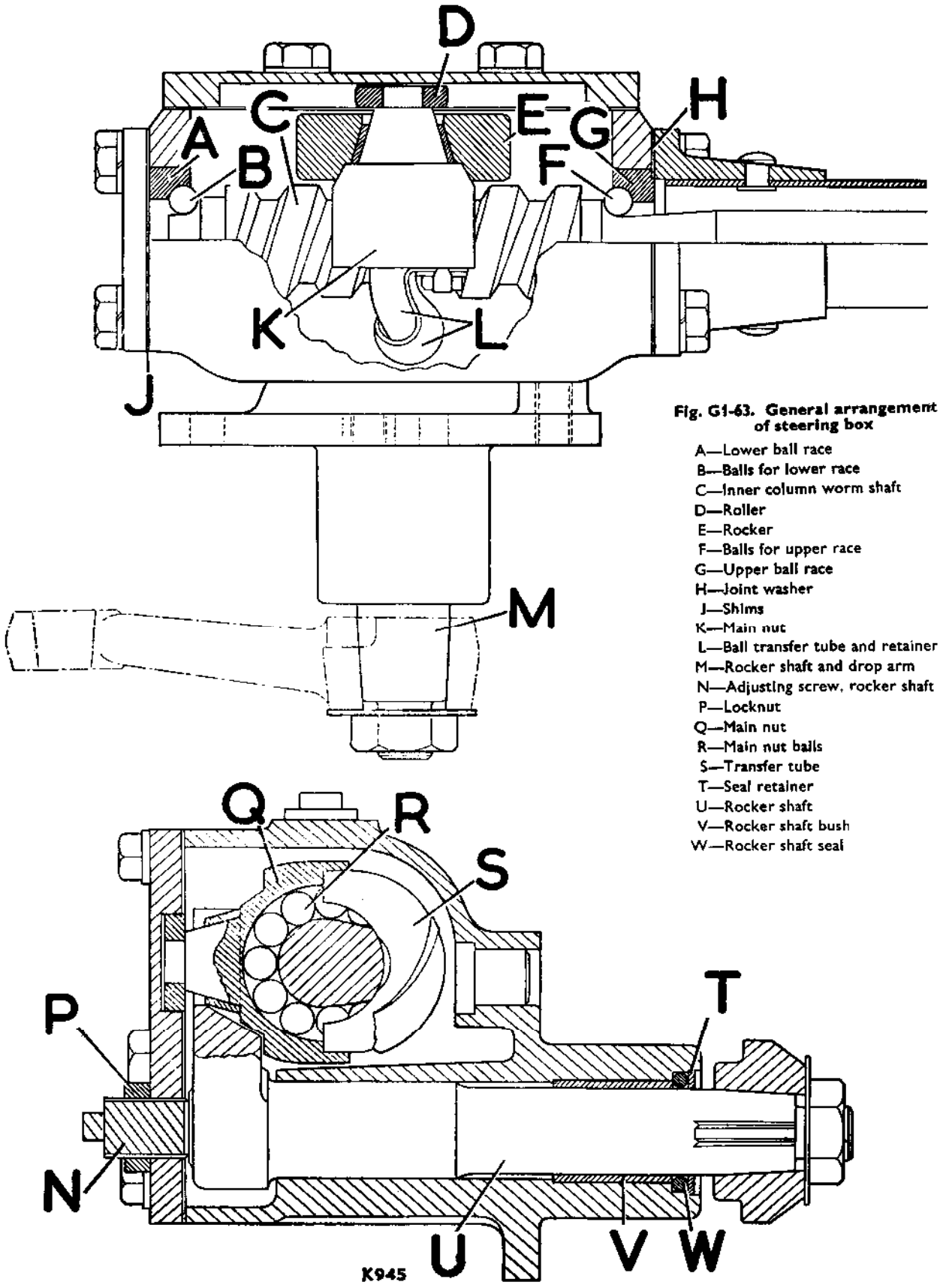


**Fig. G1-63. General arrangement of steering box**

A—Lower ball race
B—Balls for lower race
C—Inner column worm shaft
D—Roller
E—Rocker
F—Balls for upper race
G—Upper ball race
H—Joint washer
J—Shims
K—Main nut
L—Ball transfer tube and retainer
M—Rocker shaft and drop arm
N—Adjusting screw, rocker shaft
P—Locknut
Q—Main nut
R—Main nut balls
S—Transfer tube
T—Seal retainer
U—Rocker shaft
V—Rocker shaft bush
W—Rocker shaft seal

## Operation G1-8—*continued*

6. Assemble the twelve $\frac{3}{8}$ in. diameter balls into the main nut and retain them in position with grease.

7. Hold the main nut in position inside the steering box and lower the box, oil filler plug end first, together with the main nut over the worm shaft end of the inner column. Carefully rotate the inner column to engage the main nut ensuring that the ball bearings in the main nut are not disturbed

8. Apply a non-hardening jointing compound to the tapped holes for the steering box to outer column securing bolts, then secure the box to the outer column.

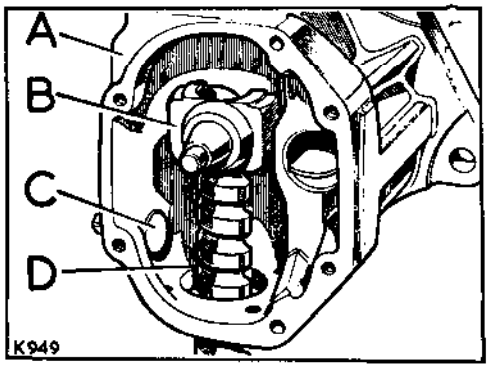


**Fig. G1-64. Assembling the main nut**

A—Steering box
B—Main nut
C—Oil filler plug
D—Inner steering column

9. Grease the lower ball race and insert the ten .280 in. diameter steel balls. Carefully fit the race into the steering box and locate on the inner column, ensuring that none of the ball bearings are dislodged.

10. Apply a non-hardening jointing compound to the tapped holes in the steering box for the end cover securing bolts, and fit the end cover complete with shims and gaskets. Note that there must be a paper gasket fitted each side of the shims.

11. Move the steering box to the horizontal position and adjust the inner column so that it can be turned by hand but has no end float. Adjust the shim thickness by adding or removing alternate shims and joint washers under the bottom end cover, to achieve this condition.

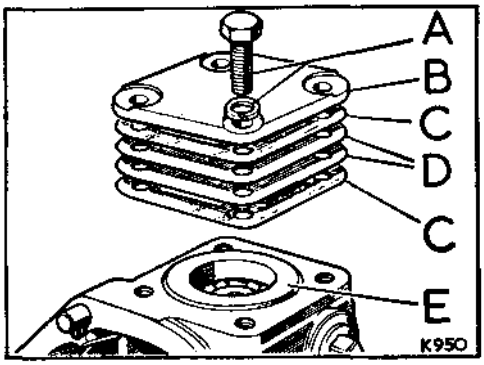


**Fig. G1-65. Steering box end cover**

A—Fixings for end cover
B—End cover
C—Joint washer
D—Steel shims
E—Lower ball race

12. Smear the side cover joint washer with general purpose grease and locate it in position on the steering box.

13. Fit the rocker shaft, roller and side cover ensuring that the roller is correctly located on the main nut and in the side cover slot.

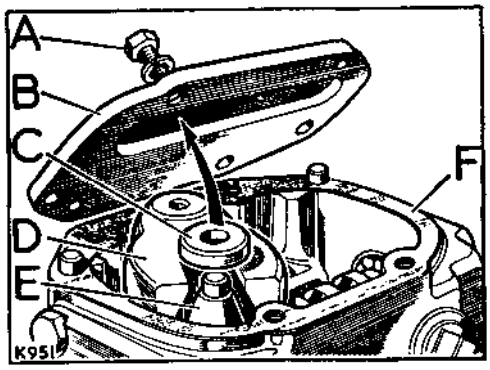


**Fig. G1-66. Rocker shaft end side cover**

A—Fixings for side cover
B—Side cover
C—Roller for main nut
D—Rocker shaft
E—Main nut
F—Joint washer

## Operation G1-8—*continued*

14. Set the steering in the straight ahead position (mid-way lock-to-lock) and screw the steering box adjuster by hand until there is just no end-float between the adjuster and the rocker shaft, then tighten the adjuster locknut ensuring that the adjuster does not move.
15. Early models only, fit the dust cover to the top of the steering column.
16. Fill the steering box with the correct grade of lubricating oil. Operation G1-1.

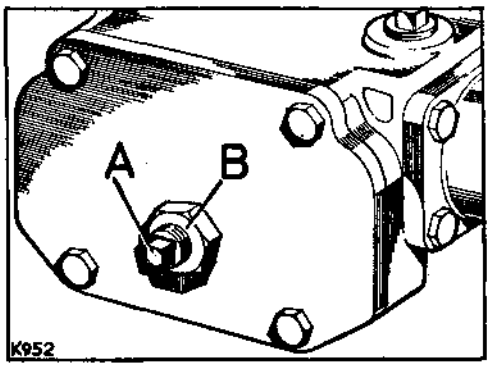


**Fig. G1-67. Steering box adjuster**

A—Adjuster
B—Locknut

## Steering relay unit, remove and refit—Operation G1-9

*(For overhaul instructions, Operation G1-10 refers)*

Workshop hand tools:
Spanner sizes: $\frac{1}{2}$ in. AF, $\frac{11}{16}$ in. AF open end, $\frac{7}{16}$ in. AF, $\frac{5}{8}$ in. AF socket
Screwdriver (medium), Mallet, brass drift

### To remove

1. Remove the name plate and withdraw the radiator grille.

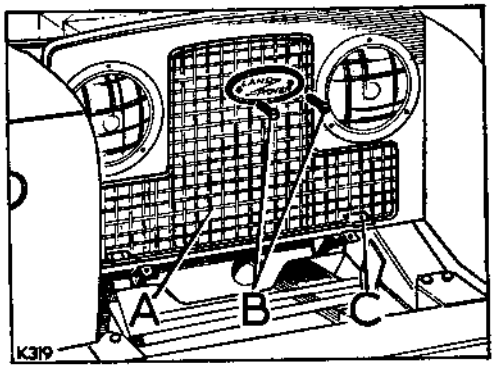


**Fig. G1-68. Radiator grille**

A—Radiator grille
B—Fixings for name plate and grille
C—Support brackets

2. Remove the fixings securing the upper and lower relay levers to the relay unit and prise the levers clear.

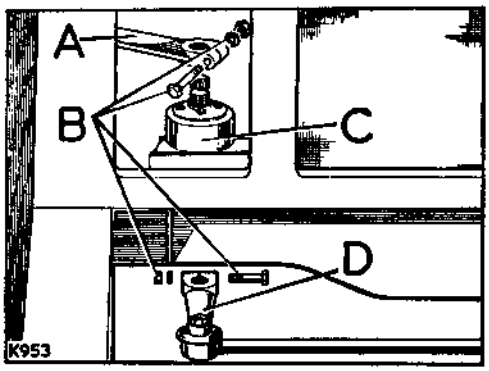


**Fig. G1-69. Relay levers**

A—Upper relay lever
B—Fixings for relay levers
C—Relay housing
D—Lower relay lever

3. Remove the fixings between the relay housing and the chassis top face.

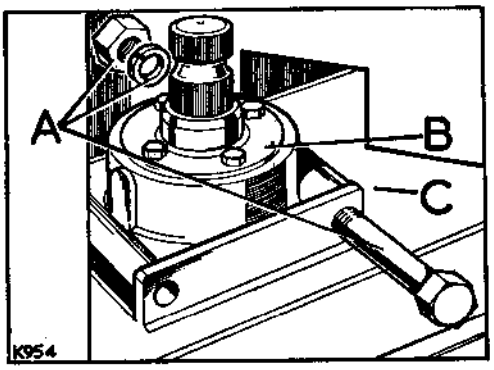


**Fig. G1-70. Relay housing top fixings**

A—Fixings for relay housing
B—Relay housing
C—Chassis top face

4. Remove the relay mounting flange plate from the underside of the chassis.

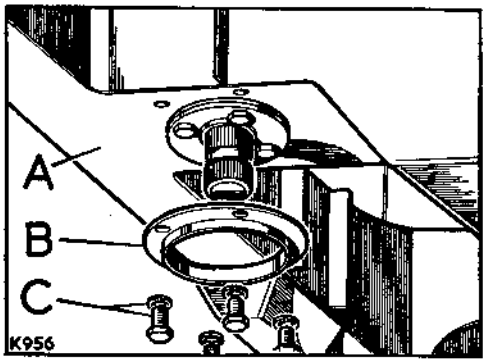


**Fig. G1-71. Relay mounting flange plate**

A—Underside of chassis
B—Flange plate
C—Fixings for flange plate

**Note:** Before attempting to remove the relay unit, remove any equipment that is mounted directly above and would obstruct relay unit removal.

## Operation G1-9—*continued*

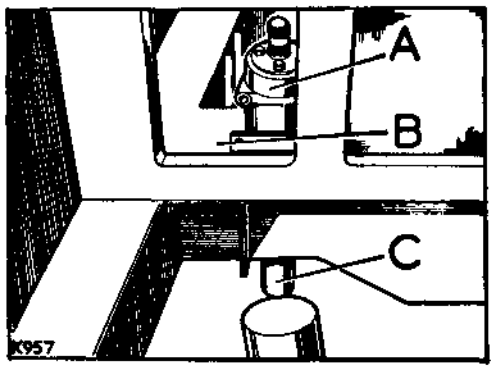


**Fig. G1-72. Removing the relay unit**

A—Relay unit
B—Chassis top face
C—Brass drift

5. Using a brass drift and mallet, drive the relay unit upward to free it from the chassis. If necessary, use penetrating oil between the unit and the chassis.

**To refit**

1. Before fitting the relay unit, ensure that it is filled with oil. Operation G1-1.
2. Fit the relay unit to the chassis with the filler plug boss towards the driver's side of the vehicle. The relay unit must be a drive fit in the chassis.
3. Secure the relay unit top fixings, see Fig. G1-70.
4. Fit the relay mounting flange plate to the underside of the chassis, see Fig. G1-71.
5. Fit the upper and lower relay levers to the relay unit. Tighten the relay lever pinch bolts to a torque figure of 55 lb ft (7.6 mkg).

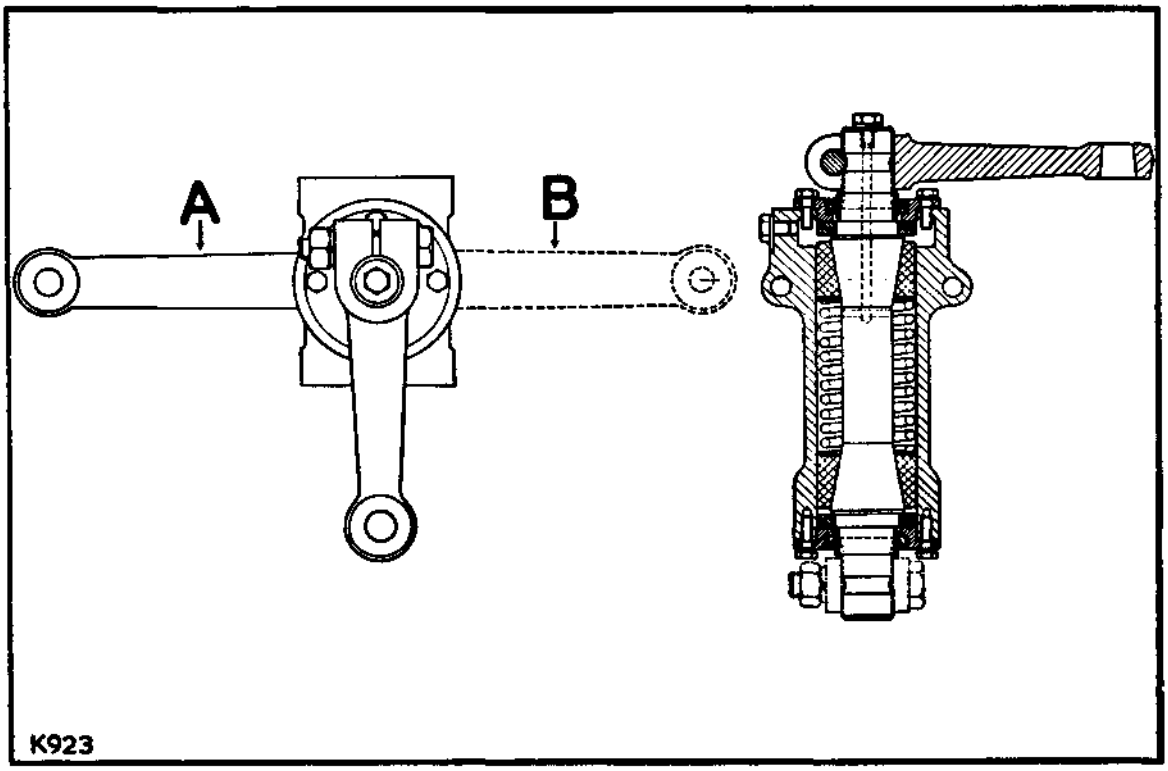


**Fig. G1-73. Location of relay levers**

A—Lower relay lever, LHStg models
B—Lower relay lever, RHStg models

## Operation G1-9—*continued*

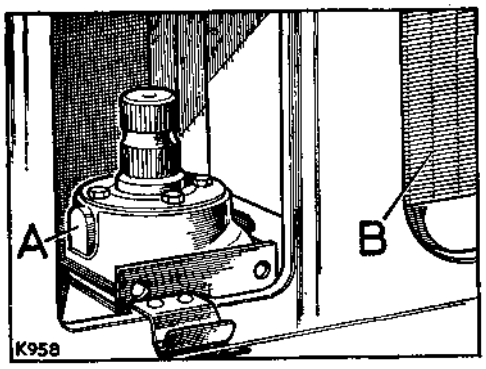


**Fig. G1-74. Relay unit location**

A—Boss on relay housing
B—Radiator
(RHStg illustrated. LHStg is symetrically opposite)

6. Refit any equipment removed to give access to the relay unit during removal.
7. Fit the radiator grille and name plate, see Fig. G1-68.

## Steering relay unit, to overhaul—Operation G1-10

*(For removal and refitting instructions, Operation G1-9 refers)*

Workshop hand tools:
Spanner size: 2 BA open end
Mallet, 2 in. (50 mm) hose clip

Special tools:
Tool for compressing spring, Part No. 600536

### To dismantle

1. Remove the oil filler and breather plugs and drain all the oil from the relay unit.

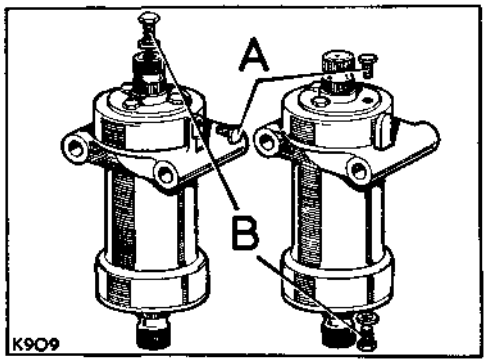


**Fig. G1-75. Oil filler and breather plugs, early and latest type**

A—Oil filler hole and plug
B—Breather hole and plug on early type. Drain plug on latest type

2. Remove the bottom oil seal retainer complete with seal and joint washer.

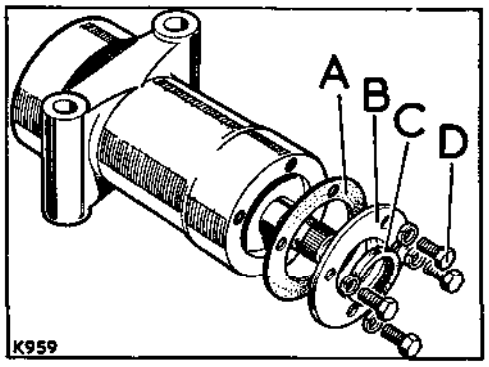


**Fig. G1-76. Bottom oil seal retainer**

A—Joint washer
B—Oil seal retainer
C—Oil seal
D—Fixings for oil seal retainer

**Caution:** During the following procedure use extreme care, the relay housing contains a large compressed spring, which is automatically released during dismantling.

2. Cover the bottom end of the shaft by tying a sock to the relay body, then using a mallet, tap out the shaft, thrust washer, spring, fibre bush and plain washer into the sock.

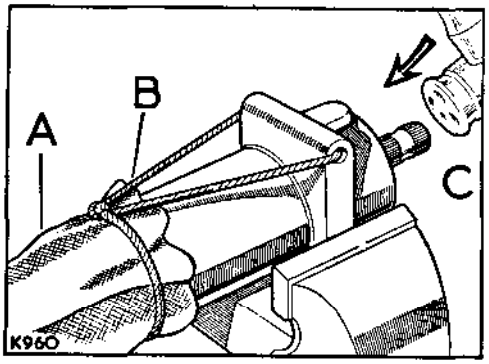


**Fig. G1-77. Removing relay shaft**

A—Sock covering bottom of housing
B—Tie sock as shown
C—Tap out shaft as indicated

3. Remove the sock and lift out the relay shaft and fittings.

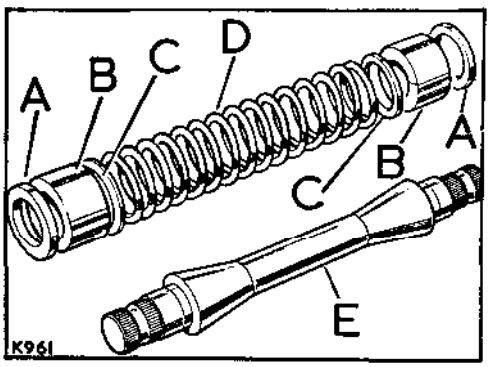


**Fig. G1-78. Relay shaft and fittings**

A—Thrust washer
B—Split bush
C—Washer for spring
D—Spring
E—Relay shaft

4. Remove the top oil seal retainer complete with seal and joint washer.

## Operation G1-10—*continued*

### Inspection

1. Examine all components for obvious signs of wear or damage and fit new replacements as required.
2. Check the relay shaft at the diameters which form the tracks for the oil seals. Any damage or score marks would cause failure of the oil seals, and a new replacement shaft must be fitted.

   **Note:** Early type shafts are fitted with distance pieces which can be replaced separately.
3. The free length of the spring should be 7¼in. (184 mm).

### To reassemble

1. If removed, fit the oil seals, lipped side inward, to their retainers, using jointing compound on the outside diameter of the seals.
2. Locate two halves of the split bush on the top cone of the shaft.
3. Insert the assembly of shaft and bush into the housing from the bottom.

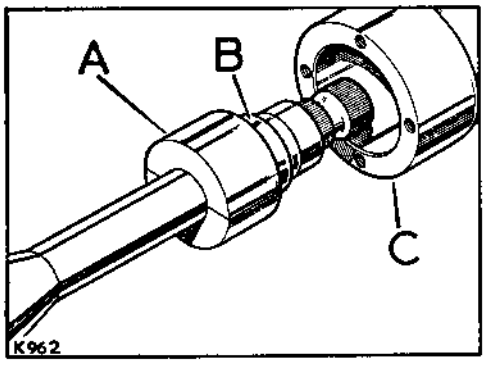


**Fig. G1-79. Assembling shaft to housing**

A—Split bush
B—Relay shaft top cone
C—Relay housing, bottom end

4. Secure the housing and shaft assembly, bottom end uppermost, in a vice with a ¾ in. (19 mm) block under the bottom end of the shaft.

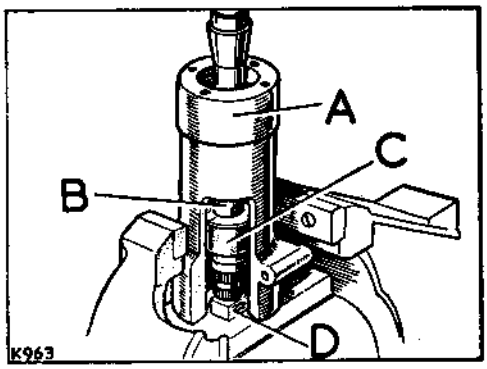


**Fig. G1-80. Housing, shaft and block in position**

A—Housing
B—Shaft
C—Split bush halves
D—Block ¾ in. (19 mm) high

5. Insert washer for spring into housing and fit two of the oil seal retainer fixing bolts into the housing diametrically opposite each other.
6. Place the spring in position over the shaft and into the housing.
7. Place washer for spring on the top of the spring.
8. Using special tool Part No. 600536, compress the spring, taking care to ensure that it does not fly out. Turn the tool to lock in position with the keyhole slots under the heads of the bolts.

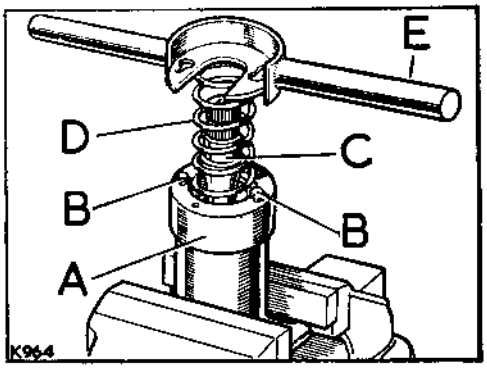


**Fig. G1-81. Spring ready to be compressed**

A—Housing
B—Bolts for oil seal retainer
C—Shaft
D—Spring
E—Special tool Part No. 600536

## Operation G1-10—*continued*

9. Locate the other split bush in position on the bottom cone of the shaft and secure with a 2 in. (50 mm) hose clip.

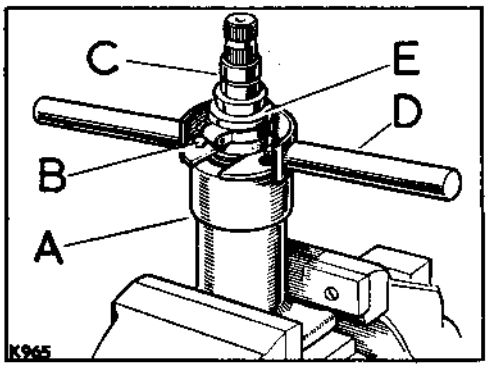


**Fig. G1-82. Spring compressed**

A—Housing
B—Bolts for oil seal retainer
C—Shaft
D—Special tool, Part No. 600536
E—Split bush secured with 2 in. (50 mm) hose clip

10. Turn the special tool and allow it to clear the bolt heads.

11 Withdraw the tool from between the spring and split bush.

12. Remove the oil seal retainer fixing bolts from the housing.

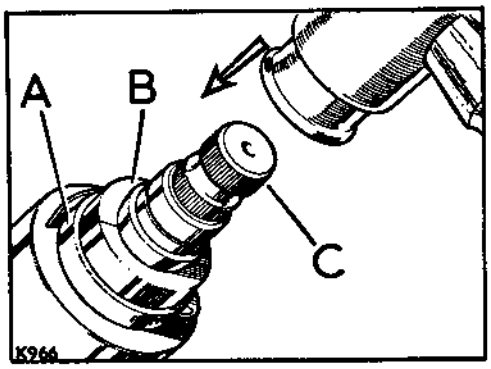


**Fig. G1-83. Locating shaft assembly into housing**

A—Hose clip
B—Split bush
C—Relay shaft

13. Remove the assembly from the vice, gently tap shaft into position until the split bush has entered the housing for at least half its length.

14. Remove the hose clip and continue to tap the shaft into the housing until the bushes are correctly located in the housing.

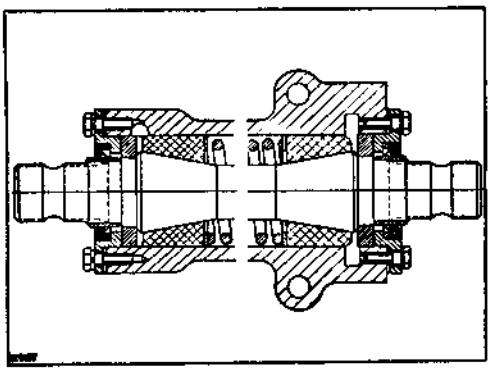

**Fig. G1-84. Cross section of steering relay**

15. Smear general purpose grease on both sides of the joint washers and fit one to each end of the housing.

16. Fit the thrust washer and oil seal retainer, complete with seal, to bottom end of the housing only.

**Note:** Latest type relay. Use jointing compound on the threads of the bolt fitted to the breather hole.

17. Using one of the holes in the top of the housing for the oil seal retainer fixing bolts, fill the housing with the correct grade oil, see Section X. Ensure that housing is completely filled.

18. Fit the thrust washer and oil seal retainer, complete with seal to the top of the housing, using jointing compound on the threads of the four securing bolts.

19. Hold the relay unit in a vice, temporarily attach the upper relay lever and use a suitable spring balance to check resistance to rotation of the relay shaft. The resistance, measured on the spring balance, must not be less than 12 lb (5,4 kg) and should not exceed 16 lb (7,3 kg).

## Operation G1-10—*continued*

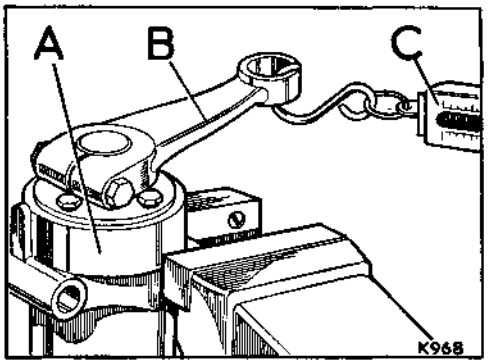


**Fig. G1-85. Checking resistance to rotation of relay lever**

A—Relay unit
B—Upper relay lever
C—Spring balance

If the resistance is less than 12 lb (5,4 kg), fit a new replacement spring.

If the resistance is excessive, remove the oil seal retainers and thrust washers, then use a suitable piece of tube to push each split bush in turn, clear of its cone and inject lubricating oil. Re-assemble and recheck.

# Fault diagnosis—Steering

## Steering kick and wheel wobble

A certain amount of wheel kick must be expected over rough surfaces, but if this becomes excessive or if actual wheel wobble is experienced, the following checks must be carried out. Only after these checks have failed to reveal the cause should the swivel pin damping be checked.

1. Ensure that the bolts securing the steering box to its mounting bracket, and the bolts securing the bracket to the frame are tight. Also ensure that the steering box stiffener bracket is fitted.
2. Check the steering box adjustment, Operation G1-8.
3. Check the nut securing the drop arm to the rocker shaft and nuts securing ball joints to track rod and steering arms for tightness.
4. Check the ball joints for alignment and wear. Adjust or renew as necessary.
5. Check the relay top and bottom lever clamp bolt for tightness and check for wear at lever and shaft splines. Rectify any play in the relay unit.
6. The bolts securing the relay to the chassis must be checked for tightness, also the four bolts at the bottom plate for the relay. Check the bolt flanges for cracking and check the fit of the bottom of the relay in the spigot, this must be firm.
7. The nuts and studs securing the steering levers must be checked, and ensure that the one special 'fitting' stud on each side is a tight fit and that it positively locates the arm.
8. Check shock absorber action—replace if weak. Examine the rubber bushes and replace as necessary. Check road spring shackle pins and bushes for wear, check tightness of 'U' bolts. Ensure that the spring location bolt has not sheared and that its seating hole is not elongated.
9. Check all the spring leaves, either side of the centre bolt, for breakage.
10. Check the swivel pin damping (poundage figure), Operation F1-10, and adjust as necessary.
11. Check for badly or unevenly worn tyres. Similar tread pattern tyres should be fitted. Check the tyre pressures, Section R. Check the front wheel alignment, Operation G1-2.
12. While the vehicle is on a ramp or pit, examine the chassis members and axle casings for accident damage.

## Fault diagnosis—Steering—*continued*

| Symptom | Possible cause | Investigation | Remedy |
|---|---|---|---|
| **Excessive looseness or backlash in the steering** | Steering rocker shaft incorrectly adjusted or badly worn | Check steering box adjustment, Operation G1-8 | Adjust or fit new parts as required |
| | Steering linkage loose or worn | Check ball joints for security and wear condition | Rectify or renew |
| | Steering box fixings loose | Check all fixings, see Operation G1-7 | Tighten or renew fixings as required |
| | Swivel pins and bearings loose or worn | Adjust swivel pin damping or dismantle swivel pin housings, see Section F | Adjust or fit new parts as required, lubricate swivel pins on assembly |
| | Front wheel bearings loose or worn | Check front hub bearings and adjustment, see Section F | Renew and/or adjust hub bearings as required |
| **Tight steering** | Low or unequal tyre pressures | Check tyre pressures, see Section R | Adjust as necessary |
| | Steering box oil level too low | Remove filler plug and check oil level | Replenish as necessary |
| | Steering rocker shaft adjusted too tightly | Check adjustment, Operation G1-8 | Adjust as necessary |
| | Steering ball joints partially seized or incorrectly set | Check ball joints, ensure rubber boots are in place and joints move freely, Operations G1-4, G1-5 and G1-6 | Fit new parts as required. Lubricate ball joints. Set ball joints to ensure maximum travel |
| | Loss of lubricating oil from relay unit | Remove filler plug and check oil level. Check for damaged oil seals and joint washers | Fit new oil seals and joint washers as required. Replenish lubricating oil |
| | Swivel pins dry or partially seized | Check swivel pin poundage, Operation F1-10 | Adjust and lubricate swivel pins as necessary |
| **Rattle in steering column** | Steering rocker shaft incorrectly adjusted or badly worn | Check steering box adjustment, Operation G1-8 | Adjust or fit new parts as necessary |
| **Vehicle pulls to one side** | Incorrect camber | Check for settled road springs, worn shackle bushes or damage to front axle unit | Renew parts as necessary |
| | Incorrect or unequal castor or swivel pin inclination | Check front wheel alignment. Check for settled road springs or damage to front axle unit | Adjust wheel alignment and/or fit new parts as required |
| | Uneven tyre pressures or worn tyres | Check tyre pressures and wear condition, Section R | Fit new tyres and/or adjust pressures |
| | Dragging brake | Check brake adjustment, Section H | Adjust brakes |
| | Swivel pin tight | Dismantle and check swivel pins | Fit new parts as required, lubricate swivel pins on assembly |
| | Tight or dirty front wheel bearings | Remove hubs and check bearings | Fit new parts as required, pack hubs with fresh grease, refit and adjust hubs |
| | Incorrect toe-in of front wheels | Check wheel alignment, Operation G1-2 | Adjust as necessary |
| **Vehicle wanders** | Incorrect tyre pressures or worn tyres | Check tyre pressures and wear condition, see Section R | Fit new tyres and/or adjust pressures |
| | Loose axle 'U' bolts | Check 'U' bolt fixings | Securely tighten |
| | Incorrect toe-in of front wheels | Check wheel alignment, Operation G1-2 | Adjust as necessary |

## Fault diagnosis—Steering—*continued*

| Symptom | Possible cause | Investigation | Remedy |
|---|---|---|---|
| | Tight steering box | Check adjustment, Operation G1-8 | Adjust as necessary |
| | Worn front wheel bearings | Check front hub bearings and adjustment | Renew and/or adjust hub bearings as necessary |
| | Worn swivel pins and bearings | Dismantle swivel pin housings | Fit new parts as required, lubricate swivel pins on assembly |
| | Incorrect castor | Check for settled road springs, damage to front suspension and axle unit | Fit new parts as required |
| | Bent or broken chassis | Check alignment of chassis, Section J | Repair or replace chassis |
| **Wheel wobble** | (See notes preceding fault finding chart) | | |
| | Steering column loose at dash | Check fixings | Securely tighten |
| | Incorrect tyre pressures or worn tyres | Check tyre pressures and wear condition | Fit new tyres and/or adjust pressures |
| | Eccentric wheels and tyres | Check the tyre concentricity line. Check wheel pressings for damage or distortion | Rectify or renew |
| | Worn or loose hub bearings | Check bearings and adjustment | Renew and/or adjust hub bearings as necessary |
| | Worn swivel pins and bearings | Dismantle swivel pin housings | Fit new parts as required, lubricate swivel pins on assembly |
| | Insufficient damping at swivel pins | Check poundage figure, Operation F1-10 | Adjust as necessary |
| | Insufficient damping at relay unit | Dismantle relay unit | Fit new parts as required |
| | Loose engine mountings | Check fixings | Securely tighten |
| | Worn universal joint at axle half shaft | Remove axle half shafts and check | Overhaul universal joints |
| | Incorrect castor | Check for settled road springs, damage to front suspension and axle unit | Fit new parts as required |

## GENERAL DATA

**Type**

Re-circulating ball

| | |
|---|---|
| Ratio: Straight ahead | 15.6 : 1 |
| Full lock | 23.8 : 1 |
| Inner column end-float | Nil |
| Rocker shaft end-float | Nil |

Number of turns of steering wheel from lock to lock:

| | |
|---|---|
| 88 and 109 models | 3.3 |
| 109 1 Ton model | 3.75 |

## DETAIL DATA

| | |
|---|---|
| **Relay shaft clearances in bushes** | .003 to .0045 (0,08 mm to 0,12 mm) |

**Longitudinal steering tube**

Ball joints:

| | |
|---|---|
| Type | Non-adjustable; $\frac{11}{16}$ in. Whit (16 TPI) thread |
| Tightening torque | 30 lb ft (4 mkg) |

**Steering relay unit**

Bushes:

| | |
|---|---|
| Type | Tufnol cones |

**Spring**

| | |
|---|---|
| Number of working coils | 10 |
| Free length | $7\frac{1}{4}$ in. (184 mm) |
| Fitted length | 3 in. (72 mm) |
| Load at fitted length | 104 lb (47 kg) |

**Wheel alignment**

| | |
|---|---|
| Wheel camber | $1\frac{1}{2}°$ |
| Wheel castor | 3° |
| Swivel pin inclination | 7° |
| Toe-in | 3/64 in. to 3/32 in. (1,2 mm to 2,4 mm) |

# SECTION H—BRAKING SYSTEM

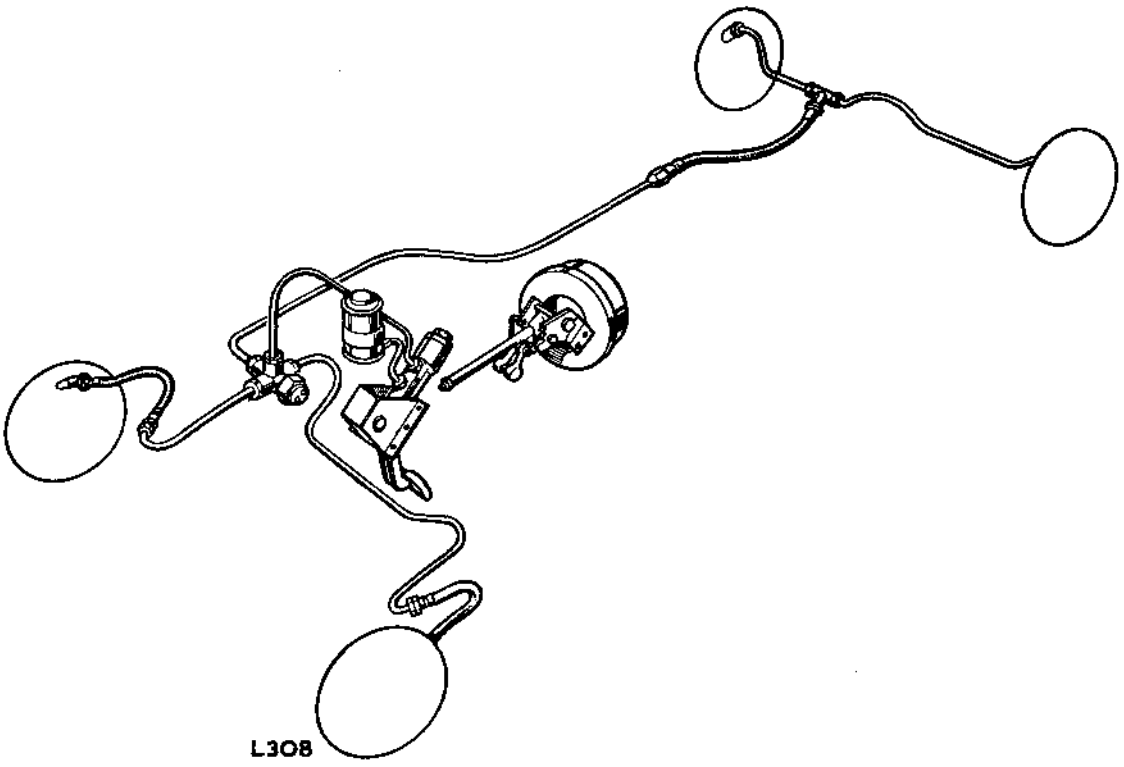


**Fig. H1-1. Braking system**

# INDEX—BRAKING SYSTEM

**Note:** A comprehensive, detailed index is included at the end of this manual


| Description | Operation Number |
|---|---|
| Exploded views and description | At beginning of section |
| Bleeding the complete braking system | 1 |
| Adjusting the complete braking system | 2 |
| **BRAKE PEDAL ASSEMBLY** | 4–4A |
| Fluid reservoir | 3 |
| Master cylinder | 5–6–7–8 |
| **MASTER CYLINDER** | |
| 'CB' type cylinder | 7–8 |
| 'CV' type cylinder | 5–5A–6–6A |
| **BRAKE ANCHOR PLATES** | |
| 10 in. diameter—Front and rear | 10 |
| 11 in. diameter—Front | 10A |
| 11 in. diameter—Rear (Series II) | 10B |
| 11 in. diameter—Rear (Series IIA) | 10C |
| Transmission brake | 11 |
| Brake shoes | 12 |
| Flexible brake pipes | 9 |
| **TRANSMISSION BRAKE** | 11 |
| Brake shoes | 12 |
| Hand brake lever and linkage | 13 |
| **SERVO UNITS** | |
| Hydraulic type servo | 14–15 |
| Mechanical type servo | 14A–15A |
| Exhauster for Diesel engines | 16 |
| **FAULT DIAGNOSIS** | At end of section |
| **DATA** | At end of section |

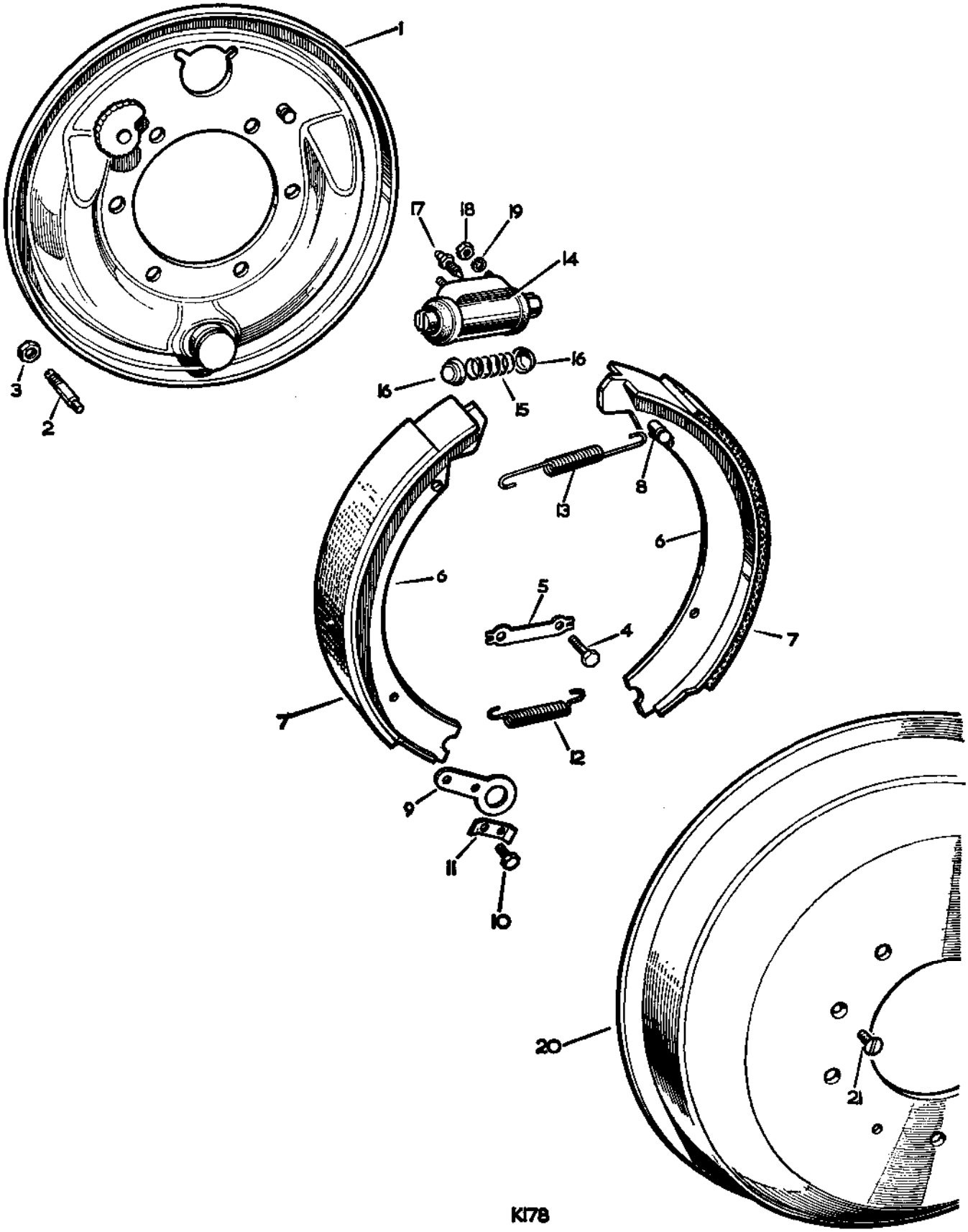


Fig. H1-2. Front and rear wheel brakes, 10 in. diameter, 88 models

**Key to illustration of front and rear wheel brakes, 10 in. diameter, 88 models**

1 Brake anchor plate assembly
2 Shoe, steady post
3 Locknut for steady post
4 Set bolt (⅜ in. x 1 in. long) } Fixing front anchor plate to axle case
5 Locker } Fixing front anchor plate to axle case
6 Brake shoe assembly, front and rear
7 Linings complete with rivets, for brake shoe
8 Spring post for brake shoe
9 Anchor for brake shoe
10 Special set screw, fixing anchor
11 Locking plate for bolt
12 Pull-off spring for brake shoe
13 Pull-off spring for leading shoe
14 Wheel cylinder assembly
15 Spring for piston, front
16 Washer for spring, front
17 Bleed screw
18 Special nut } Fixing wheel cylinder
19 Spring washer } Fixing wheel cylinder
20 Brake drum
21 Set screw, fixing brake drum

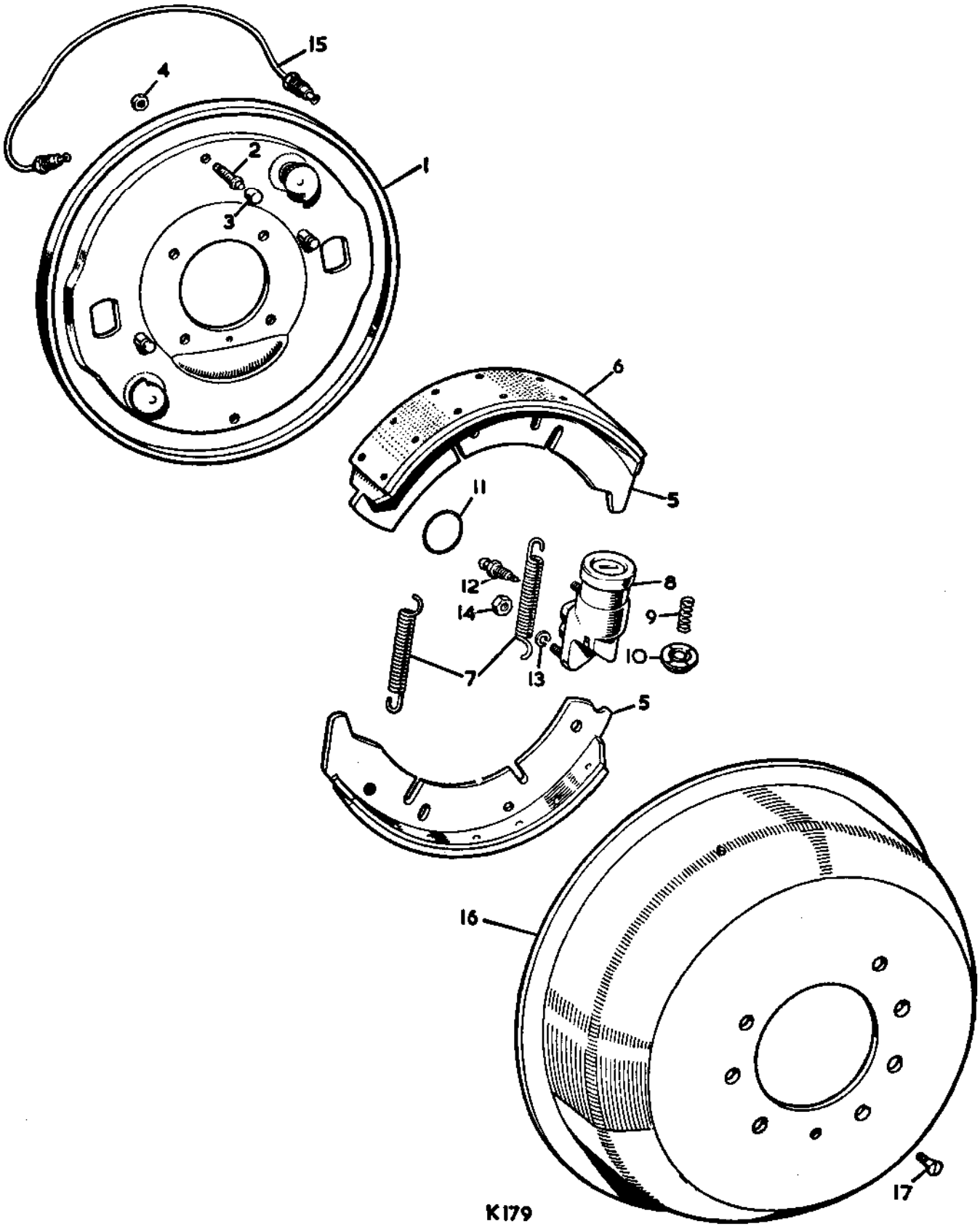


Fig. H1-3. Front wheel brakes, 11 in. diameter, 109 2½ litre models

**Key to illustration of front wheel brakes, 11 in. diameter, 109 2½ litre models**

1 Brake anchor plate
2 Steady post for brake shoe
3 Bush for steady post
4 Special nut, fixing steady post
5 Brake shoe assembly
6 Lining complete with rivets, for brake shoe
7 Pull-off spring for brake shoe
8 Wheel cylinder assembly
9 Spring (⅝ in. diameter) } For piston
10 Air excluder } For piston
11 Sealing ring for cylinder
12 Bleed screw
13 Spring washer } Fixing wheel cylinder
14 Special nut } Fixing wheel cylinder
15 Connecting pipe for wheel cylinder
16 Brake drum
17 Set screw, fixing brake drum

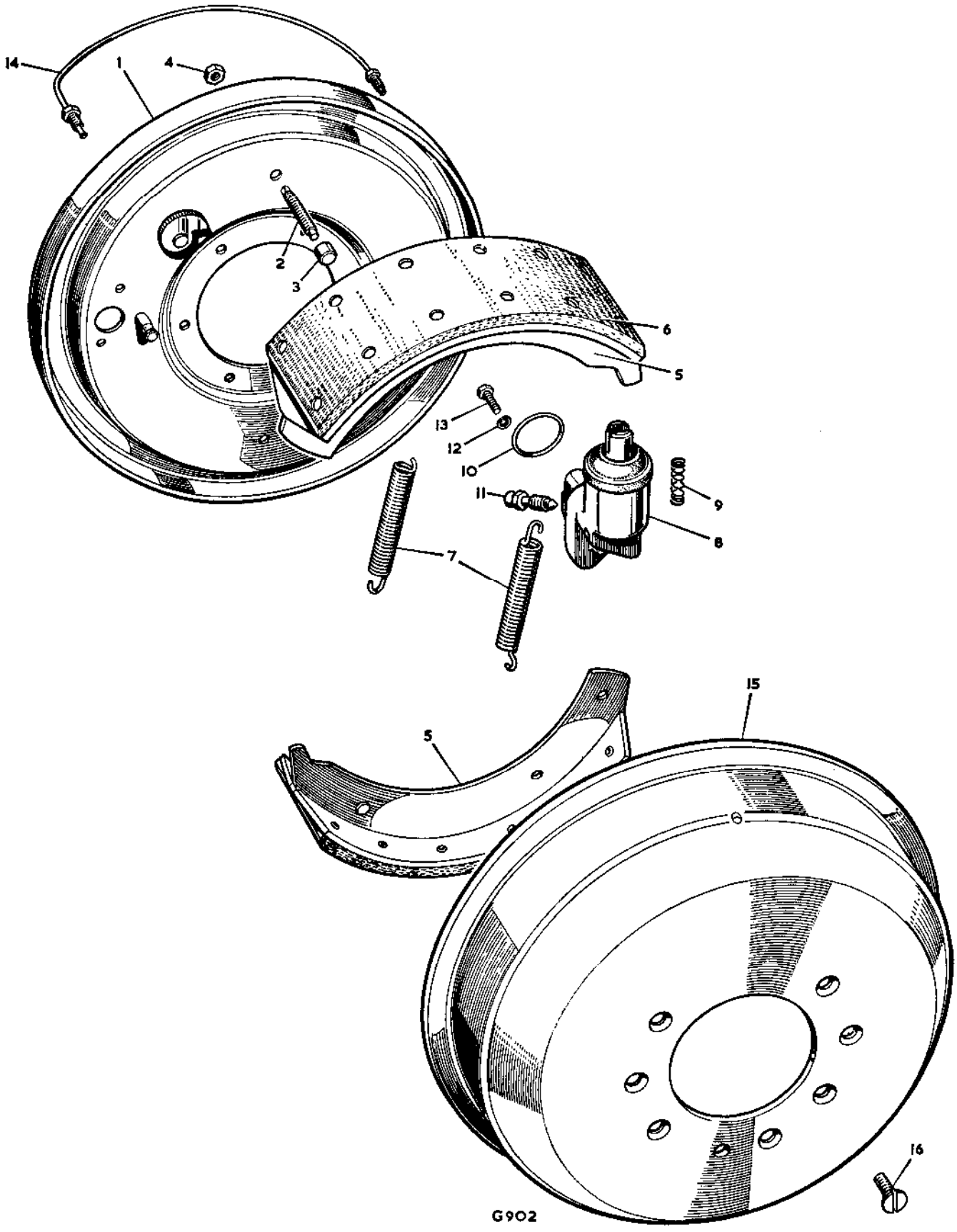


Fig. H1-4. Front wheel brakes, 11 in. diameter, 109 2.6 litre models

**Key to illustration of front wheel brakes, 11 in. diameter, 109 2.6 litre models**

1 Brake anchor plate, LH front
2 Steady post for brake shoe
3 Bush for steady post
4 Special nut, fixing steady post
5 Brake shoe assembly
6 Lining complete with rivets
7 Pull-off spring for brake shoe
8 Wheel cylinder assembly
9 Spring
10 Sealing ring for cylinder
11 Bleed screw
12 Spring washer } Fixing wheel cylinder
13 Special set bolt }
14 Connecting pipe for wheel cylinder
15 Brake drum
16 Set screw, fixing brake drum

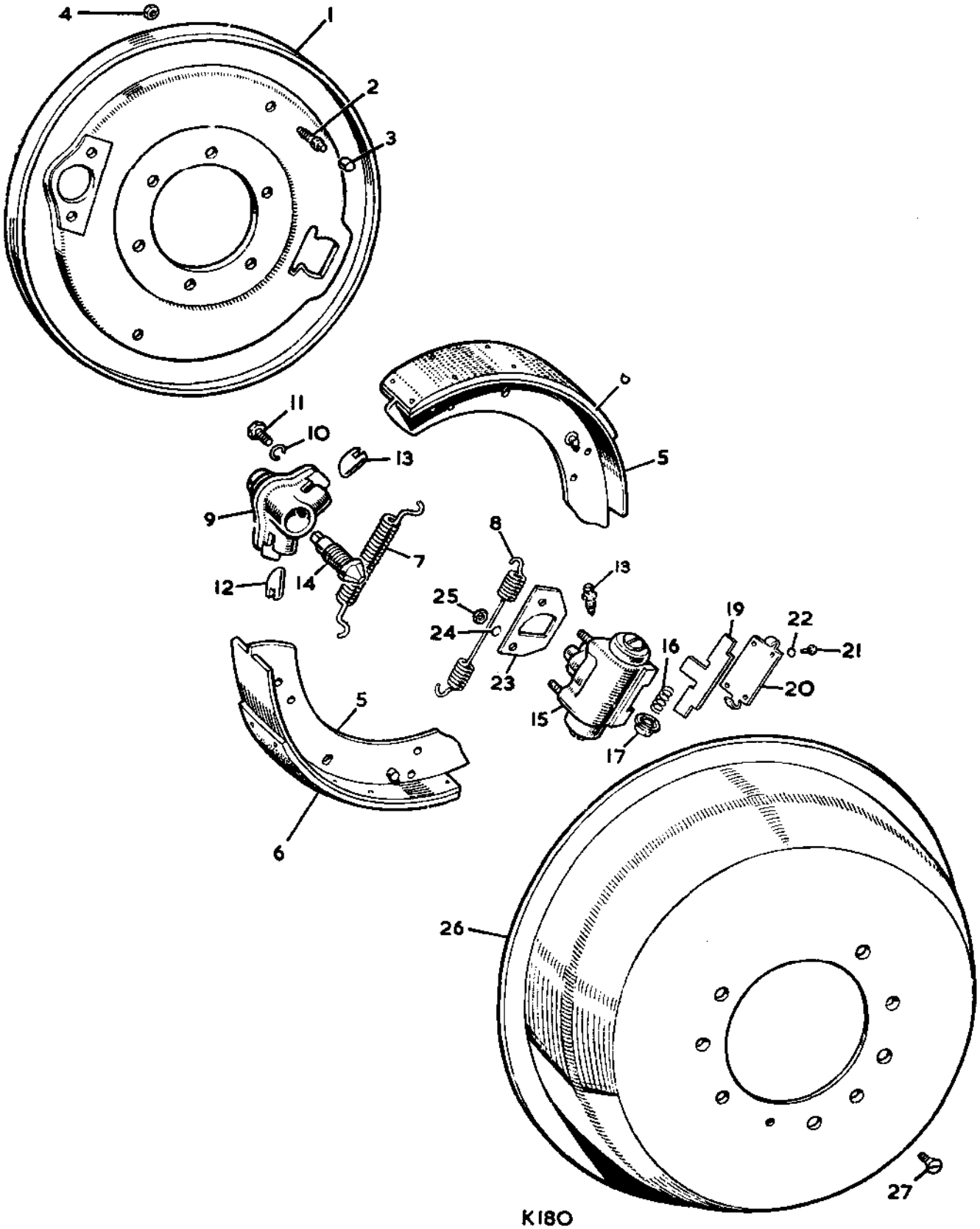


Fig. H1-5. Rear wheel brakes, 11 in. diameter, 109 Series II models

**Key to illustration of rear wheel brakes, 11 in. diameter, 109 series II models**

1 Brake anchor plate
2 Steady post for brake shoe
3 Bush for steady post
4 Special nut for steady post
5 Brake shoe assembly
6 Lining complete with rivets, for brake shoe
7 Spring, adjuster end } For brake shoe
8 Spring, wheel cylinder end } For brake shoe
9 Adjuster housing
10 Spring washer } Fixing adjuster housing
11 Special set bolt } Fixing adjuster housing
12 Plunger, LH
13 Plunger, RH
14 Cone for adjuster
15 Wheel cylinder assembly
16 Spring
17 Air excluder
18 Bleed screw
19 Brake shoe abutment plate
20 Retainer for brake shoe abutment plate
21 Screw } Fixing retainer and abutment plate
22 Shakeproof washer } Fixing retainer and abutment plate
23 Dust cover plate for brake wheel cylinder
24 Spring washer } Fixing wheel cylinder
25 Self-locking nut } Fixing wheel cylinder
26 Brake drum
27 Set screw, fixing brake drum

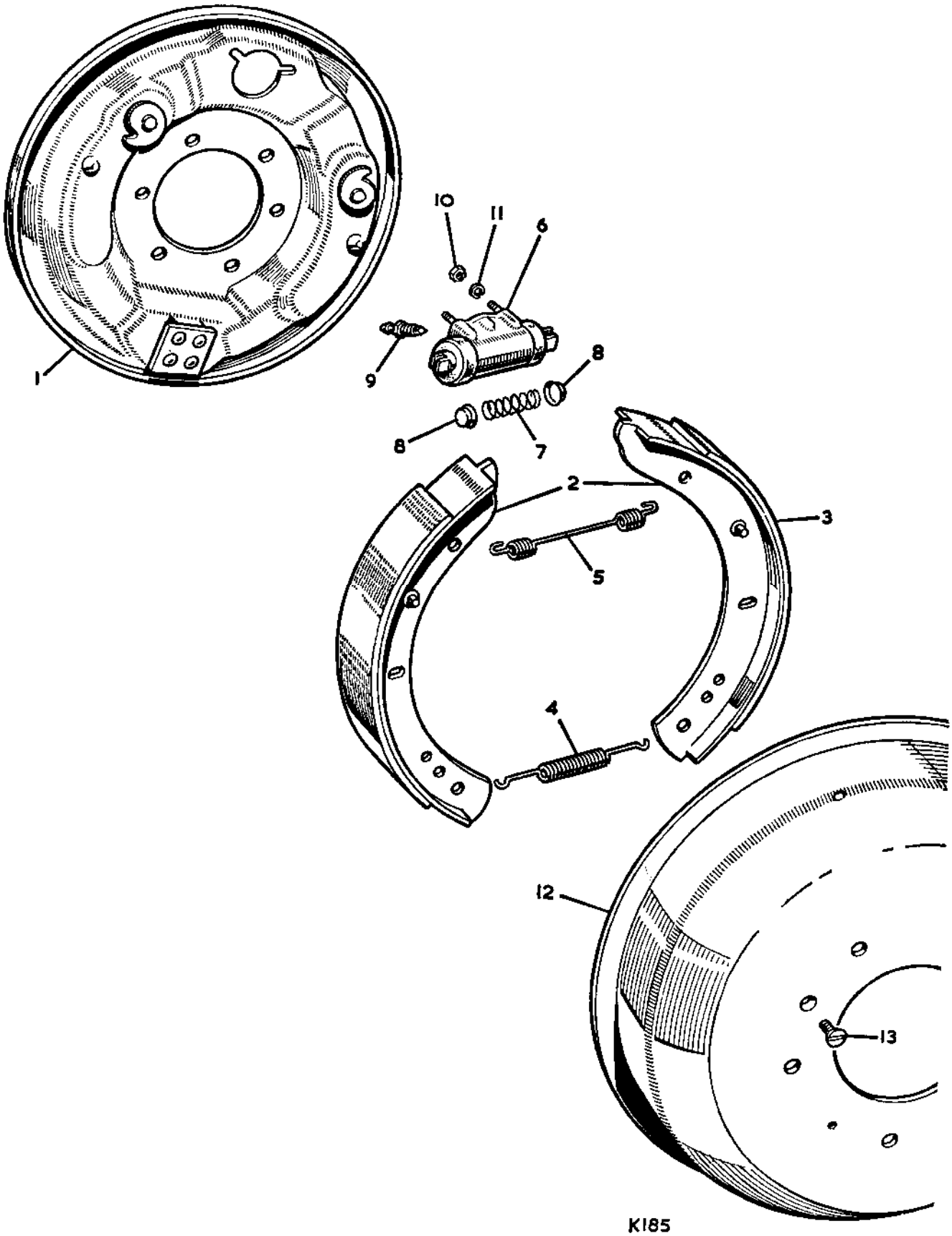


**Fig. H1-6. Rear wheel brakes, 11 in. diameter, 109 Series IIA models**

**Key to illustration of rear wheel brakes, 11 in. diameter, 109 series IIA models**

1 Brake anchor plate
2 Brake shoe assembly
3 Lining complete with rivets, for brake shoe
4 Spring, abutment end } For brake shoe
5 Spring, wheel cylinder end } For brake shoe
6 Wheel cylinder assembly
7 Spring for piston
8 Washer for spring
9 Bleed screw
10 Special nut } Fixing wheel cylinder
11 Spring washer } Fixing wheel cylinder
12 Brake drum
13 Set screw, fixing brake drum

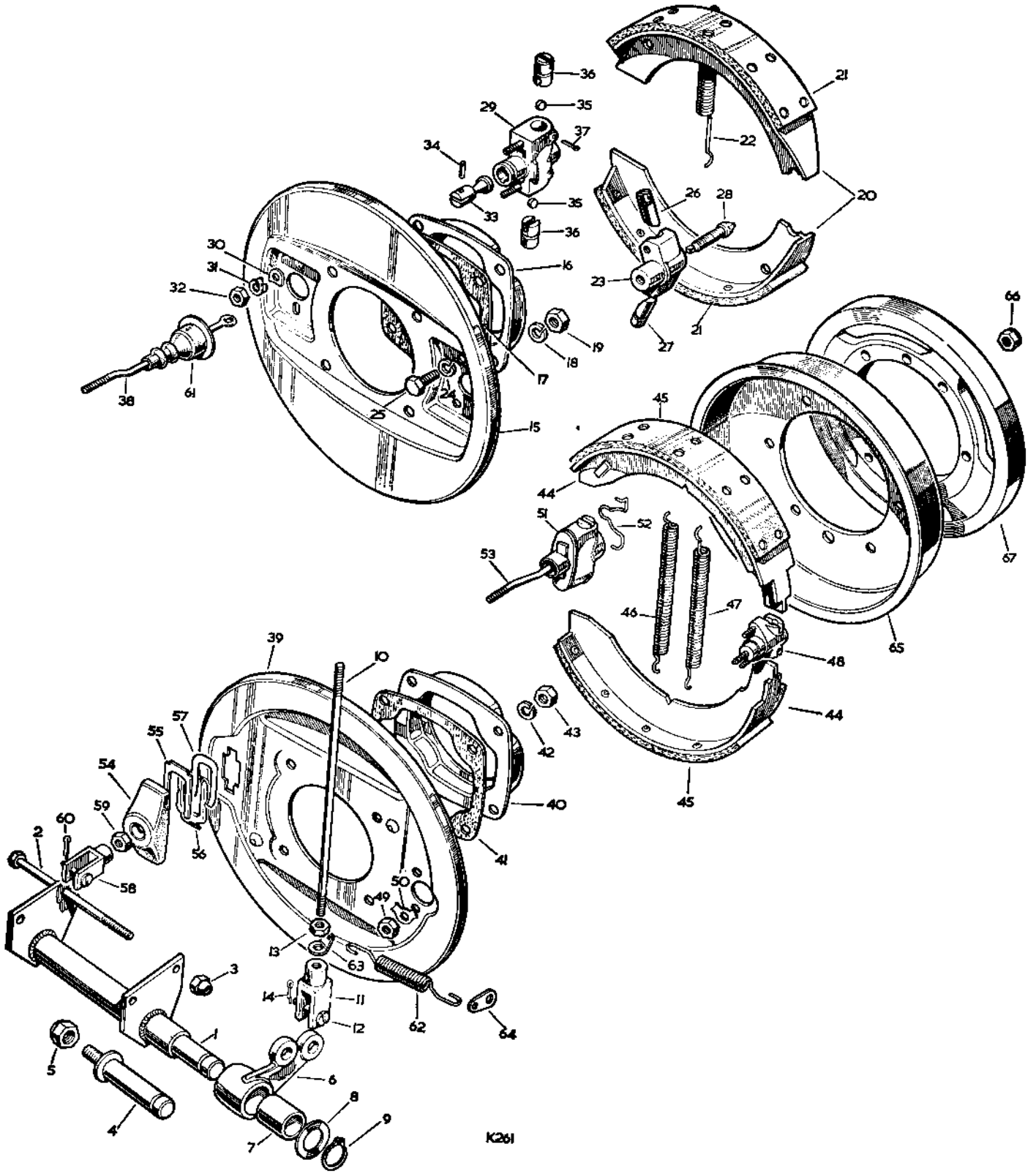


**Fig. H1-7. Transmission brake, 10 in. diameter, 88 and 109 models**

**Key to illustration of transmission brake, 10 in. diameter, 88 and 109 models**

1 Shaft for hand brake relay lever
2 Bolt (⅜ in. UNF x 4 in. long) — Fixing shaft to chassis
3 Self-locking nut (⅜ in. UNF) — Fixing shaft to chassis frame
(1, 2, 3: Up to vehicle suffix 'C' inclusive)
4 Shaft for hand brake relay lever
5 Self-locking nut (⅜ in. UNF) fixing shaft to chassis frame
6 Relay lever assembly for hand brake
7 Bush for relay lever
8 Plain washer — Fixing lever to spindle
9 Circlip — Fixing lever to spindle
10 Brake rod, relay to hand brake lever
11 Clevis fork end — Fixing brake rod to relay and hand brake lever
12 Clevis pin complete — Fixing brake rod to relay and hand brake lever
13 Locknut (5/16 in. UNF) — Fixing brake rod to relay and hand brake lever
14 Split pin — Fixing brake rod to relay and hand brake lever
15 Anchor plate, transmission brake
16 Oil catcher for transmission brake
17 Joint washer for oil catcher
18 Spring washer — Fixing anchor plate and oil catcher to speedometer housing
19 Nut (⅜ in. UNF) — Fixing anchor plate and oil catcher to speedometer housing
20 Brake shoe assembly, boxed pair
21 Lining complete with rivets for shoe
22 Pull-off spring for brake shoe
23 Adjuster housing
24 Spring washer — Fixing adjuster housing
25 Set bolt — Fixing adjuster housing
26 Plunger, RH
27 Plunger, LH
28 Adjuster cone
29 Expander housing
30 Special washer — Fixing expander housing
31 Spring washer — Fixing expander housing
32 Simmonds nut — Fixing expander housing
33 Expander cone
34 Pin, fixing cone to brake rod
35 Roller for expander
36 Plunger for expander
37 Split pin, fixing plunger
38 Brake rod, expander to relay lever
(15–38: Up to gearboxes numbered: 146000565, 156000430, 151005187)
39 Anchor plate, transmission brake
40 Oil catcher for transmission brake
41 Joint washer for oil catcher
42 Spring washer — Fixing anchor plate and oil catcher to speedometer housing
43 Nut (⅜ in. BSF) — Fixing anchor plate and oil catcher to speedometer housing
44 Brake shoe assembly, boxed pair
45 Lining complete for shoe, boxed pair
46 Pull-off spring, expander end — For brake shoe
47 Return spring, adjuster end — For brake shoe
48 Adjuster unit assembly
49 Nut (¼ in. UNF) — Fixing adjuster unit
50 Tab washer — Fixing adjuster unit
51 Expander unit assembly
52 Clip retaining tappets
53 Brake rod, expander to relay lever
54 Dust cover for expander unit
55 Packing plate
56 Locking plate
57 Retaining spring — Fixing expander unit
58 Clevis complete — Fixing brake rod to relay lever
59 Locknut (5/16 in. BSF) — Fixing brake rod to relay lever
60 Split pin — Fixing brake rod to relay lever
61 Dust cover for brake rod
62 Return spring for brake rod
63 Anchor for spring
64 Anchor for spring, on transfer box
65 Brake drum
66 Self-locking nut (5/16 in. BSF) fixing brake drum and damper
67 Transmission damper at rear end of gearbox
(39–66: From gearboxes numbered: 146000566, 156000431, 151005188 onwards)

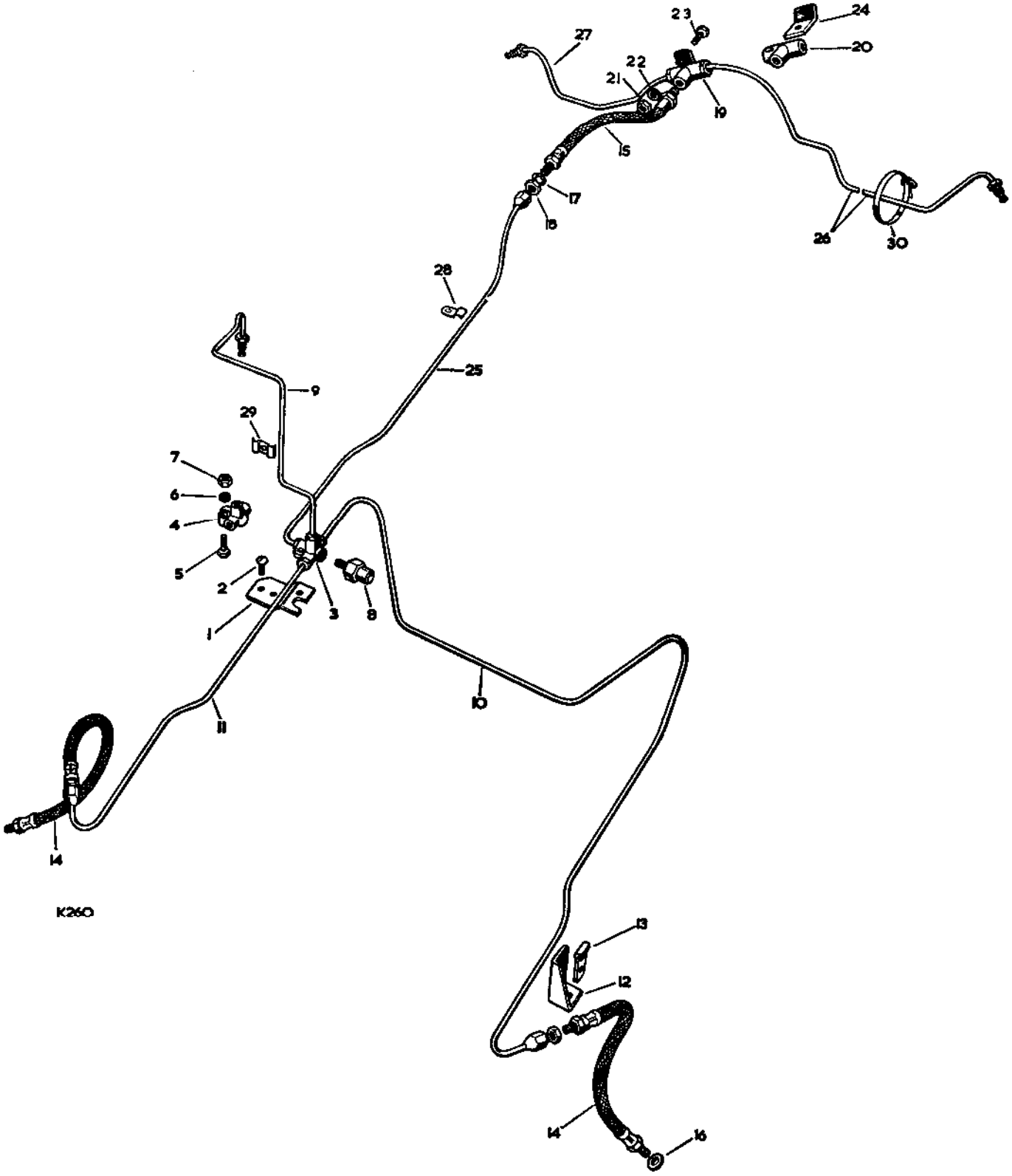


**Fig. H1-8. Layout of brake pipes, 88 and 109 2½ litre models**

**Key to illustration of brake pipes, 88 and 109 2¼ litre models**

1 Bracket for junction piece
2 Drive-screw, fixing bracket
3 5-way junction piece for brake pipes—Up to vehicle suffix 'E' inclusive
4 4-way junction piece for brake pipes—From vehicle suffix 'F' onwards
5 Bolt (¼ in. UNF x 1¼ in. long) } Fixing junction piece
6 Spring washer
7 Nut (¼ in. UNF)
8 Stop lamp switch, hydraulic type—Up to vehicle suffix 'E' inclusive
9 Brake pipe, master cylinder to 5-way junction piece
10 Brake pipe, junction piece to LH front
11 Brake pipe, junction piece to RH front
12 Bracket for LH front brake pipe } 2¼ litre Petrol and Diesel models
13 Clip for LH front brake pipe
14 Hose complete for front wheels
15 Hose complete to rear axle
16 Joint washer for hoses
17 Shakeproof washer } Fixing hose to bracket
18 Special nut
19 'T' piece on rear axle, Rover type axles
20 'T' piece on rear axle, ENV type axle, 109 optional
21 Nut (5/16 in. UNF) } Fixing 'T' piece
22 Spring washer
23 Bolt (5/16 in. UNF x ¾ in. long)
24 Bracket for 'T' piece, ENV type axle, 109 optional
25 Brake pipe to rear hose
26 Brake pipe, LH rear to 'T' piece
27 Brake pipe, RH rear to 'T' piece
28 Clip, brake pipes to chassis frame
29 Clip, brake and clutch pipes to dash
30 Clip on rear axle for LH pipe

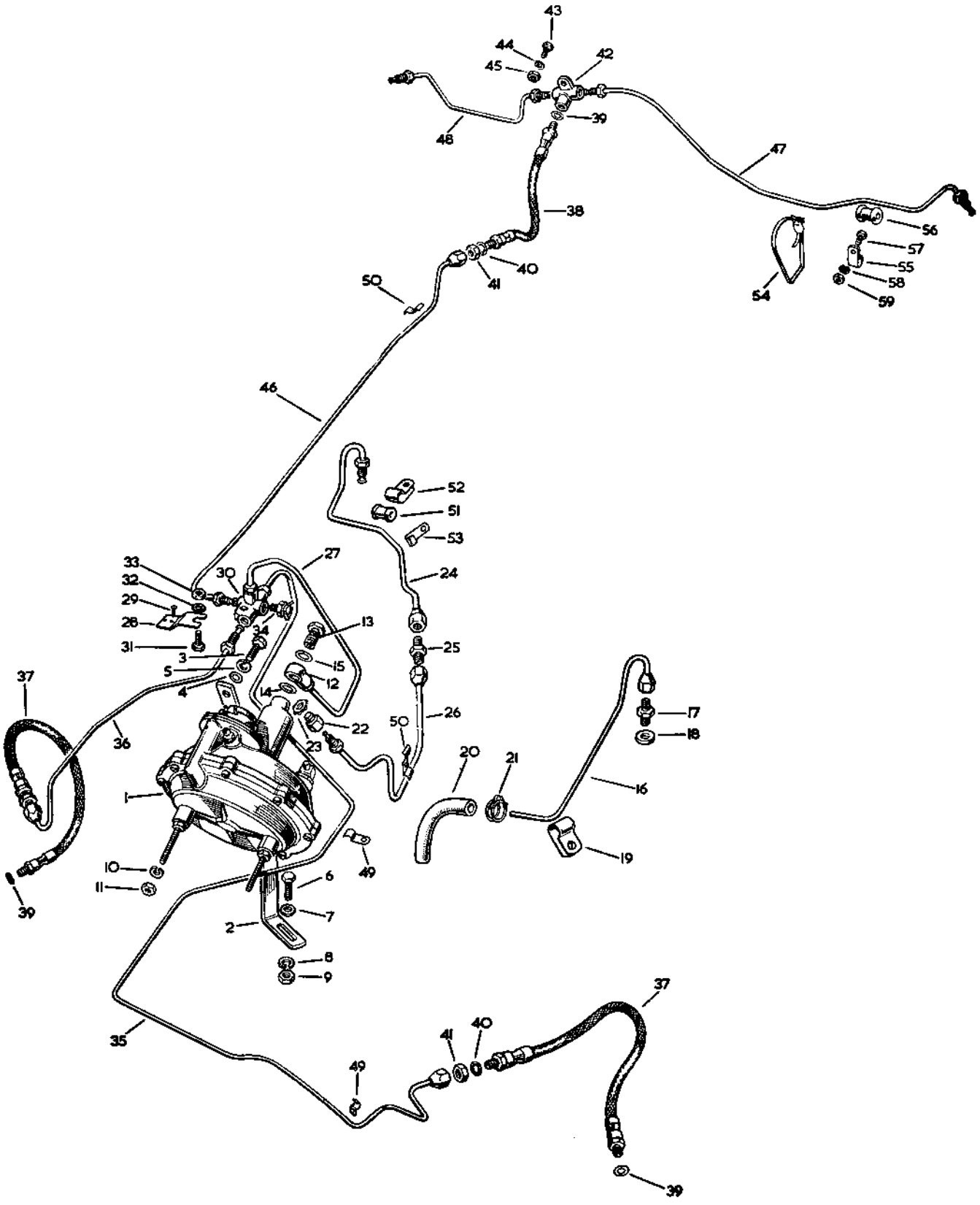


H944

**Fig. H1-9. Layout of brake pipes and servo unit, 109 2.6 litre models**

**Key to illustration of layout of brake pipes and servo unit, 109 2.6 litre models**

1 Brake servo unit
2 Support bracket for brake servo
3 Set bolt ($\frac{5}{16}$ in. UNC x $\frac{3}{8}$ in. long) } Fixing servo to support bracket
4 Plain washer
5 Spring washer
6 Bolt ($\frac{5}{16}$ in. UNF x $\frac{3}{4}$ in. long) } Fixing support bracket to chassis frame
7 Plain washer
8 Spring washer
9 Nut ($\frac{5}{16}$ in. UNF)
10 Spring washer } Fixing servo to air cleaner support
11 Nut ($\frac{5}{16}$ in. UNF)
12 Banjo for servo
13 Banjo bolt } Fixing banjo to servo
14 Gasket
15 Gasket
16 Pipe complete, inlet manifold to hose
17 Adaptor } Fixing servo pipe to inlet manifold
18 Gasket
19 Clip, fixing servo pipe to water outlet pipe
20 Rubber hose connecting manifold pipe to servo
21 Clip, fixing rubber hose to pipe and brake servo
22 Adaptor for servo pipe
23 Gasket for adaptor
24 Pipe complete, master cylinder to union
25 Union for pipe
26 Pipe complete, union to servo
27 Pipe complete, brake servo to 5-way piece
28 Bracket for 5-way piece
29 Drive screw, fixing bracket
30 5-way piece for brake pipes
31 Bolt ($\frac{1}{4}$ in. UNF x $1\frac{1}{4}$ in. long) } Fixing 5-way piece to support bracket
32 Spring washer
33 Nut ($\frac{1}{4}$ in. UNF)
34 Stop lamp switch
35 Brake pipe, 5-way to LH front
36 Brake pipe, 5-way to RH front
37 Hose complete for front wheels
38 Hose complete to rear axle
39 Joint washer for hoses
40 Shakeproof washer } Fixing hose to bracket
41 Special nut
42 'T' piece on rear axle
43 Bolt ($\frac{5}{16}$ in. UNF x $\frac{3}{4}$ in. long) } Fixing 'T' piece
44 Spring washer
45 Nut ($\frac{5}{16}$ in. UNF)
46 Brake pipe to rear hose
47 Brake pipe, LH rear to 'T' piece
48 Brake pipe, RH rear to 'T' piece
49 Single clip, brake pipes to chassis frame
50 Double clip, brake pipes to chassis frame
51 Grommet } Fixing brake servo pipe to pedal bracket top cover
52 Clip
53 Clip, fixing brake pipe to steering box bracket
54 Clip on rear axle for LH pipe
55 Clip for bush } Fixing LH axle pipe to chassis frame
56 Rubber bush
57 Bolt (2 BA x $\frac{1}{2}$ in. long)
58 Spring washer
59 Nut (2 BA)

## Bleeding complete brake system—Operation H1-1

*(For brake adjustment instructions, Operation H1-2 refers)*

Workshop hand tools:
Spanner sizes: $\frac{7}{16}$ in. BSF, $\frac{7}{16}$ in. AF, $\frac{5}{8}$ in. AF open end
Girling brake adjustment spanner, Girling hose clamp (3 off)

### General

The process of removing air from the pipe line and cylinders is known as 'bleeding' and is necessary whenever any part of the system has been disconnected, or the level of fluid in the supply tank has been allowed to fall so low that air has been drawn into the master cylinder.

When seals are worn it is possible for air to enter the wheel cylinders without any sign of leaking fluid and cause a 'spongy' pedal which is the usual indication of bubbles of air in the system.

Use of the Girling Brake Service Hose Clamp considerably facilitates the bleeding procedure by accurate diagnosis of the exact location of air in the system, therefore saving time by (a) locating the hydraulic fault, and (b) saving fluid when servicing the wheel cylinders.

**Providing the brake hose is in reasonable condition, damage cannot be caused using the hose clamp, but the use of other tools to clamp the hoses is not recommended as damage may be caused internally to the hose without it being noticed externally.**

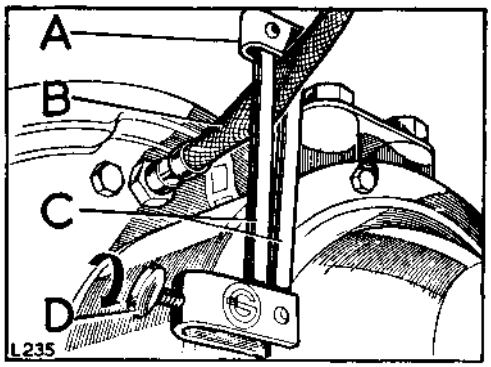


**Fig. H1-10. Girling hose clamp**

A—Pivot end of clamp
B—Flexible brake pipe
C—Rods
D—Clamp screw

If Girling hose clamps are available, release the clamp screw and fit the clamp so that the hose is between the rods at the pivot end, squeeze the rods together, apply the screw clamp and tighten.

With clamps fitted on the two front and one rear hose the pedal action should be perfect with no indication of 'spongyness'. If under these circumstances a spongy pedal is apparent, a new or overhauled master cylinder assembly must be fitted and bled and the test repeated.

**Note:** If the system incorporates servo assistance, the servo unit may also require replacement or overhaul, and must in any event be bled.

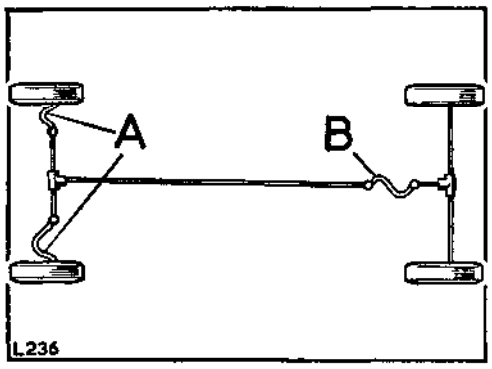


**Fig. H1-11. Position of hose clamps**

A—Hose clamps at front
B—Hose clamp at rear

If perfect pedal action is obtained with the three hose clamps in position, remove the rear clamp and if the pedal is spongy, the air must be in the rear cylinders. However, if the pedal action is good, remove first one then the other of the two front clamps, repeating the test until the air is located.

For wheel cylinder servicing only the appropriate hose need be clamped. This keeps the loss of fluid to a minimum and after the service is satisfactorily completed, only the affected parts require bleeding.

**It is vital that absolute cleanliness is maintained throughout the entire bleeding operation. Never use a rag of linty texture and ensure that no dirt or grit enters the system—especially at the supply tank. All equipment to be used must be entirely free from petrol, paraffin, or any form of mineral oil, as mineral contamination spreads rapidly in the hydraulic system, causing a dangerous deterioration of the rubber seals.**

## Operation H1-1—*continued*

**Always replace the rubber cap on each bleed-screw to prevent dirt entering the bleed tube during any subsequent bleeding operation.**

**Never, under any circumstances, use the fluid which has been bled from a system to top-up the supply tank as it may be aerated, have too much moisure content, and/or be contaminated.**

There are three main variations of braking system in use, each requiring a different method of bleeding. Take care to identify the system concerned, which will have either a 'CV' (centre valve) or 'CB' (compression barrel) type master cylinder, while a third variant incorporates a servo unit in addition to one of the foregoing master cylinders.

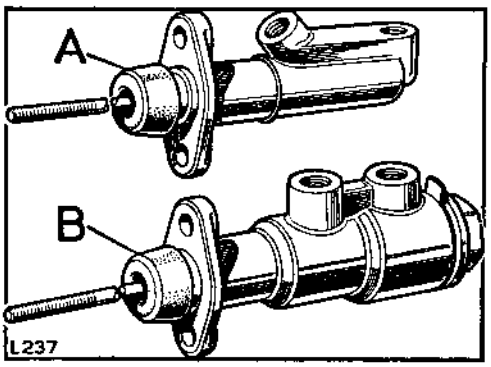


**Fig. H1-12. Identification of master cylinders**

A—'CV' type
B—'CB' type

### IMPORTANT—Systems fitted with 'CB' type master cylinder

If a large proportion of the fluid has been removed from the system, it will be necessary to replenish with new fluid and if possible this should be forced in under pressure, i.e. approximately 14 lb/sq in. (1 kg/cm²) using Castrol-Girling pressure-filling equipment.

Due to the angled position of the master cylinder, air tends to become trapped at the cap end, behind the seal. This is one of the reasons why it is beneficial to introduce fluid into the system under pressure. Whilst filling, slacken off the fluid outlet pipe connection on the master cylinder. This will help considerably in allowing the air to escape as quickly as possible.

In extreme cases where it is difficult to expel the air from the system, it may be helpful if the front of the vehicle is raised so that the master cylinder is in a horizontal position whilst bleeding the brakes.

### To bleed brake system

It is essential to observe strict cleanliness during this operation. Use only fluid of the recommended grade.

1. Check the fluid level in the reservoir and, if necessary, top-up with the recommended grade of fluid, see Section X. This level must be maintained during the operation of bleeding.

### Systems fitted with servo assistance

If the system is fitted with a servo unit of the hydraulic type, continue as follows. If the system is fitted with a servo unit of the mechanical type, coupled direct to the brake master cylinder, the servo unit requires no attention and the system must be bled as described for the 'CV' type master cylinder.

2. Do not start the engine before or during the bleeding operation. Residual vacuum in the servo should be destroyed by operating the brake pedal at least six times.
3. Release the pipe nut, a maximum of one turn, at the point where the servo outlet pipe is connected into the original braking system, and pull the pipe end clear of its seat in the fitting. Bleed by operating the brake pedal

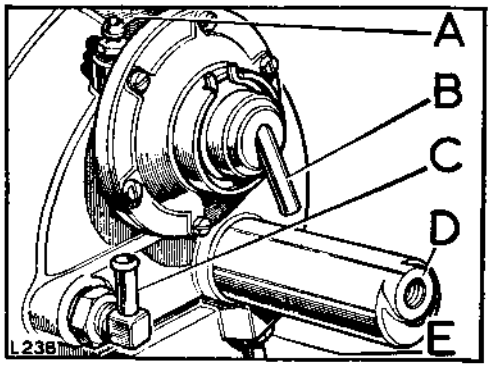


**Fig. H1-13. Servo unit pipe connections**

A—Brake fluid bleed nipple
B—Air inlet from atmosphere
C—Vacuum hose connection
D—Fluid outlet pipe connection
E—Fluid inlet from master cylinder

## Operation H1-1—*continued*

It is important that slow pedal movements are made, using only half to three-quarters of the pedal stroke. This will avoid aerating the hydraulic fluid.

4. Bleed until all air is expelled and tighten the pipe nut while the fluid is flowing. This will remove most of the air from the installation without pumping it through the whole system. Cotton waste or rag should be used to absorb waste fluid.
5. Loosen the bleed screw at the top of the servo unit and fit a rubber bleed tube, with the free end submerged in a container of clean brake fluid. This is to prevent the ingress of air to the system while it is being bled. Bleed until fluid free from air bubbles is emitted, then tighten the bleed screw at the commencement of a pedal stroke to ensure that air does not enter the system via the bleed screw. DO NOT overtighten—4 to 6 lbs ft (0,55 to 0,8 mkg) torque is sufficient and this can be applied with a short spanner.

**All brake systems, continue as follows:**

6. Completely slacken off each brake shoe adjuster on all four wheels, to minimise the wheel cylinder volume and reduce the possibility of air being trapped.
7. The system should now be bled commencing at the **wheel cylinder nearest to the master cylinder, continuing with the next nearest wheel cylinder,** so that the final unit is the furthest one away from the master cylinder. Bleed each wheel cylinder in turn as follows:
8. Slacken the bleed screw and fit a bleed tube, with the free end submerged in a container of clean brake fluid. This is to prevent the ingress of air to the system while it is being bled.
9. Operate the brake pedal as follows. If the system employs a 'CV' type master cylinder, the pedal should be pushed down through the full stroke, followed by three short rapid strokes and then the pedal should be allowed to return quickly to its stop with the foot right off. This action should be repeated until the air is dispelled at each bleed screw.

   For the 'CB' type master cylinder the action is different; the pedal should be depressed slowly throughout the full stroke and allowed to return slowly; there should be a pause of three or four seconds and the movement repeated until the air is dispelled at each bleed screw.

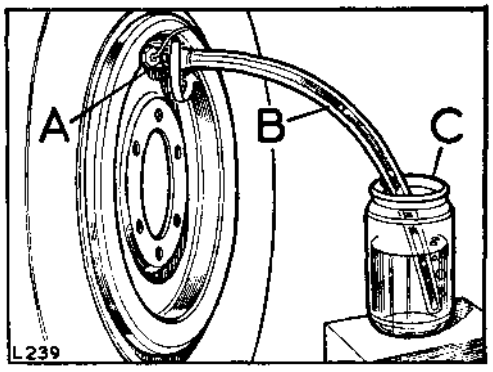


**Fig. H1-14. Bleeding wheel cylinders**

A—Bleed screw
B—Bleed tube
C—Fluid container

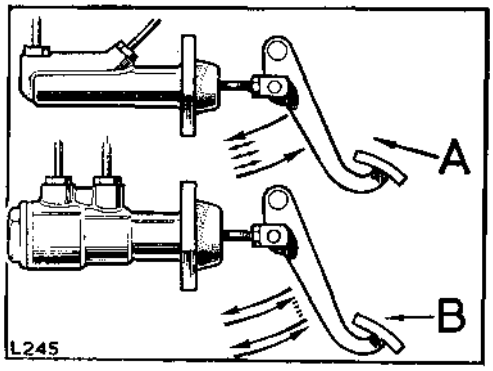


**Fig. H1-15. Brake pedal action**

A—'CV' type master cylinder
B—'CB' type master cylinder

**Note:** Any floor mat or other object which may obstruct the full stroke of the pedal, should be removed.

10. On completion of bleeding each wheel cylinder, before removing the bleed tube, tighten the bleed screw at the commencement of a pedal stroke, to ensure that air does not enter the system via the bleed screw. DO NOT overtighten—4 to 6 lbs ft (0,55 to 0,8 mkg) torque is sufficient and this can be applied with a short spanner.

## Operation H1-1—*continued*

11. When bleeding has been completed, hold the brake pedal hard down and check all hydraulic connections and bleed screws for leaks. Fill the master cylinder reservoir to the correct level.
12. Adjust the brakes. Operation H1-2.
13. If the system is fitted with servo assistance:
    Hold foot pressure on the brake pedal and start the engine. If the vacuum system is functioning correctly, the pedal will move towards the board. If no movement is felt, the vacuum system is not operating.

    Finally, re-bleed the servo unit at the bleed nipple only, as already described.

# Adjusting complete brake system—Operation H1-2

*(For brake bleeding instructions, Operation* H1-1 *refers)*

Workshop hand tools:
Spanner sizes: $\frac{5}{16}$ in. BSF open end, $\frac{7}{16}$ in. BSF
Girling brake adjustment spanner

## General

There are two types of brake shoe adjuster in use; fulcrum type—operated by a square-end adjuster, and snail cam type—operated by a hexagon-end adjuster. Both types of adjuster being located on the rear face of the brake anchor plate.

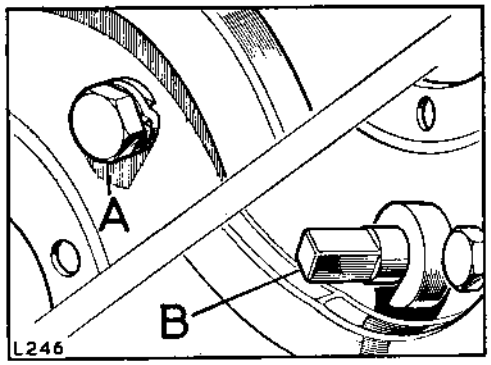


**Fig. H1-16. Brake shoe adjusters**

A—Snail cam type
B—Fulcrum type

## Wheel brake unit, front and rear, 10 in. brakes—88 models

### To adjust

Jack-up each wheel in turn. On the back face of the brake anchor plate will be found a hexagon adjustment bolt, which operates a snail cam bearing on the leading shoe. Only one of these is fitted to each wheel brake unit, thereby providing single-point adjustment. Spin the wheel and rotate the adjuster bolt until the brake shoe contacts the drum, then ease the adjuster until the wheel again rotates freely. Repeat for the other three wheels.

## Front wheel brake unit, 11 in. brakes—109 models

### To adjust

Each shoe is independently set by means of an adjuster operating through a serrated snail cam.

With the front wheels jacked up, ensure that the wheels rotate freely; slacken off the adjusters if necessary by turning anti-clockwise.

Turn the adjuster for each shoe clockwise until the shoe just brushes the brake drum, then slacken off two serrations.

## Rear wheel brake unit, 11 in. brakes—109 models Series II

### To adjust

The rear brake shoes are adjusted by means of a single adjuster assembly fitted at the lower side of the brake anchor plate which allows the shoes to expand or contract equally.

With the rear wheels jacked up ensure that they rotate freely; slacken the adjuster if necessary, by turning anti-clockwise.

Apply the foot brake to ensure that the shoes are bedded in and turn the adjuster clockwise until the linings brush the brake drum, then slacken adjuster off (anti-clockwise) two clicks.

## Rear wheel brake unit, 11 in. brakes—109 models Series IIA

### To adjust

Each shoe is independently set by means of an adjuster operating through a serrated snail cam.

With the vehicle jacked up, ensure that the wheels rotate freely; slacken off the adjusters if necessary, by turning anti-clockwise.

Turn the adjuster for each shoe clockwise, until the shoe brushes the brake drum, then slacken off two serrations.

## Transmission brake unit, 10 in. brakes—All models

### To adjust

The transmission brake shoes are adjusted by means of a single adjuster assembly which allows the shoes to expand or contract equally.

Turn the adjuster cone until the brake shoes are locked tightly against the drum, then slacken off the cone two clicks; give the brake a firm application to ensure that the shoes have centralised at the expander end. The brake drum should now be free to rotate.

Set the hand brake linkage at the vertical adjuster rod, so that the hand brake has one or two clicks free movement in the 'off' position.

## Fluid reservoir, remove and refit—Operation H1-3

*(For removal and refitting instructions of the plastic type reservoir secured directly to the master cylinder, Operation H1-5A refers)*

Workshop hand tools:
Spanner sizes: $\frac{7}{16}$ in. AF, $\frac{11}{16}$ in AF open end
Screwdriver (medium)

### To remove

1. Lift the bonnet and prop open.
2. Make provision to catch the fluid which will be released, then disconnect the brake and clutch outlet pipes from the fluid reservoir.

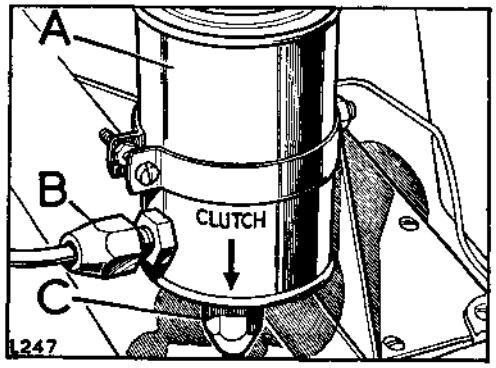


**Fig. H1-17. Reservoir outlet pipes**

A—Fluid reservoir
B—Brake outlet pipe
C—Clutch outlet pipe

3. Remove the fixings and withdraw the reservoir complete with clamp.

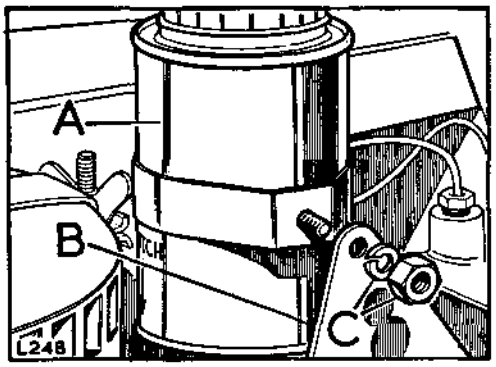


**Fig. H1-18. Fixings for reservoir**

A—Reservoir and clamp assembly
B—Mounting bracket
C—Fixings for reservoir

4. If required, remove the clamp from the reservoir.

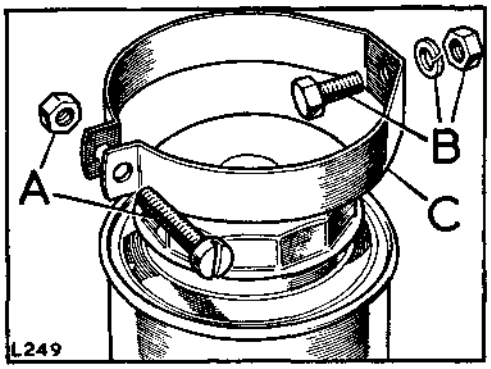


**Fig. H1-19. Clamp for reservoir**

A—Fixings for clamp
B—Fixings for reservoir
C—Clamp

### To refit

1. If removed, fit the clamp and mounting bolt to the reservoir, but do not fully tighten the fixings until the reservoir is positioned on the vehicle.
2. Fit the reservoir in position and secure the fixing, see Fig. H1-18.
3. Connect the brake and clutch outlet pipes to the reservoir and secure the clamp fixings.
4. Replenish the reservoir, using Castrol-Girling Brake and Clutch Fluid.
5. Bleed the complete braking system. Operation H1-1.
6. Bleed the clutch system. Section B.
7. Close the bonnet.

## Brake pedal, remove and refit—Operation H1-4

*(For removal and refitting instructions for the brake pedal used in conjunction with the Girling mechanical type servo unit, Operation H1-4A refers)*

Workshop hand tools:
Spanner sizes: $\frac{7}{16}$ in. AF, $\frac{1}{2}$ in. AF open end
Pliers, screwdriver (medium)

### To remove

1. Remove the fluid reservoir. Operation H1-3.
2. Disconnect the inlet and outlet pipes from the brake master cylinder.

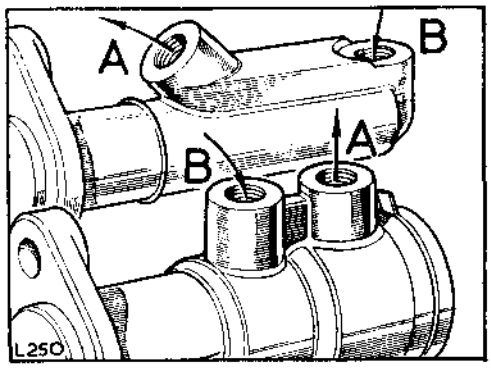


**Fig. H1-20. Pipe connections at brake master cylinder**

A—Outlet pipe
B—Inlet pipe

**Note that connections differ between 'CV' and 'CB' type master cylinders**

3. Disconnect the return spring from the brake pedal.
4. Remove the fixings securing the brake pedal bracket to the toe box.

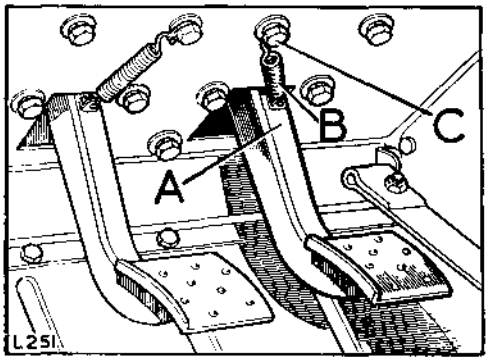


**Fig. H1-21. Brake pedal bracket fixings**

A—Brake pedal
B—Return spring for pedal
C—Fixings for brake pedal bracket (6 off)

5. Carefully withdraw the brake pedal and bracket assembly from the engine compartment, manoeuvring the pedal through the aperture in the toe box.

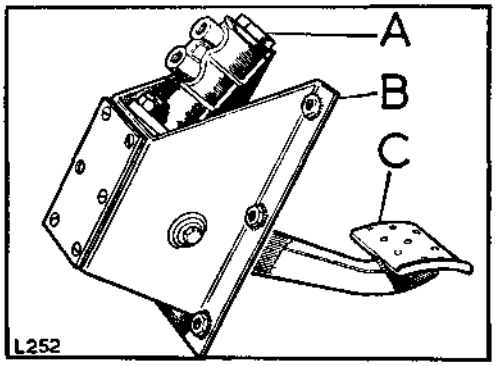


**Fig. H1-22. Brake pedal and bracket assembly**

A—Master cylinder
B—Bracket for brake pedal
C—Brake pedal

6. Remove the top cover and gasket from the brake pedal bracket.

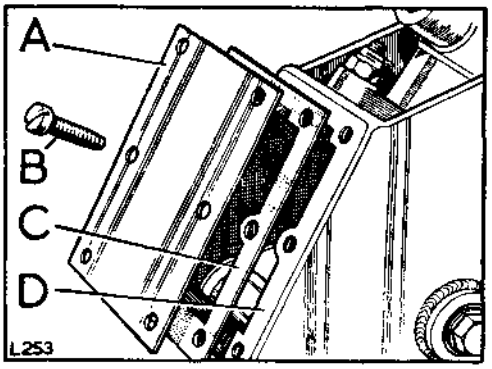


**Fig. H1-23. Top cover for brake pedal bracket**

A—Top cover
B—Fixings for top cover
C—Gasket
D—Bracket

## Operation H1-4—*continued*

7. Remove the nut and plain washer retaining the master cylinder push rod to the brake pedal trunnion, and push the rod into the master cylinder to clear the trunnion.
8. Using a suitable punch, drift out pin, from the pedal shaft.
9. Remove pedal shaft.

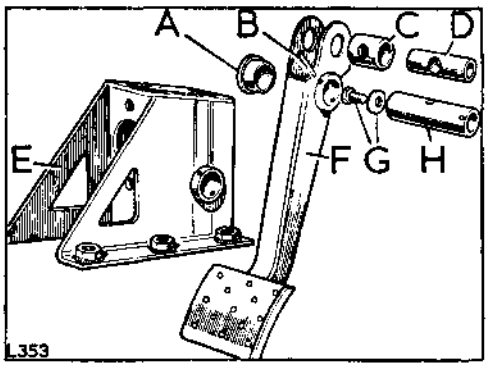


**Fig. H1-24. Brake pedal assembly**

A—Bush for pedal
B—Pin for pedal shaft
C—Distance piece
D—Trunnion for pedal
E—Bracket for brake pedal
F—Brake pedal
G—Oil plug and washer
H—Shaft for pedal

10. Withdraw the brake pedal complete with bushes and trunnion.
11. If required, remove the bushes, trunnion and distance piece from the brake pedal.

### To refit

1. If removed, fit the distance piece, trunnion and bushes to the brake pedal. Lubricate the trunnion and distance piece with general purpose grease on assembly. New pedal bushes must be reamered to .750 in. + .001 in. (15,875 mm + 0,0254 mm).
2. Smear the pedal bushes and shaft with general purpose grease; locate the pedal in position in the bracket and secure with the shaft and pin.
3. Locate the master cylinder push rod through the pedal trunnion and fit the locknut and washer.
4. Remove the oil plug from the pedal shaft; fill the shaft bore with SAE 20 oil, then replace the plug and joint washer.
5. Place the gasket in position on the securing flange of the brake pedal bracket. If necessary, use a little Bostik adhesive to retain the gasket.
6. Carefully locate the brake pedal and bracket assembly in position on the toe box, manoeuvring the pedal through the aperture in the toe box.

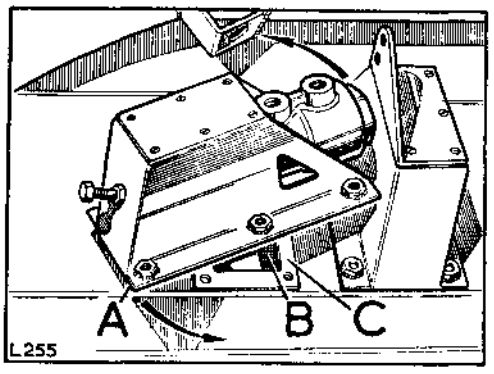


**Fig. H1-25. Fitting brake pedal and bracket**

A—Brake pedal and bracket
B—Aperture in toe box
C—Gasket

7. Secure the brake pedal and bracket assembly to the toe box, ensuring that the gasket remains in position. See Fig. H1-21.
8. Connect the return spring between the brake pedal and the toe box bracket.
9. Connect the inlet and outlet pipes to the brake master cylinder. See Fig. H1-20.
10. Fit the fluid reservoir. Operation H1-3.

## Operation H1-4—*continued*

11. Slacken both locknuts on the master cylinder push rod, and adjust the push rod by rotating until there is $\frac{1}{16}$ in. (1,5 mm) free play between the push rod and master cylinder piston, then tighten both locknuts.

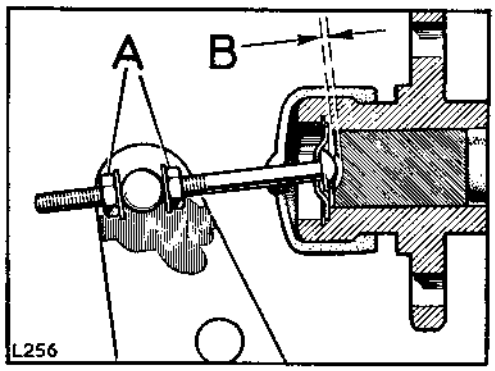


**Fig. H1-26. Push-rod setting**

A—Locknuts for push rod
B—$\frac{1}{16}$ in. (1,5 mm) free play

12. Bleed the complete braking system. Operation H1-1. Bleed the clutch system, Section B.
13. Re-check and, if necessary, adjust the push rod setting.
14. Fit the top cover and gasket to the brake pedal bracket, see Fig. H1-23.

15. **Brake master cylinder recuperation**

To ensure satisfactory recuperation of brake pedal, check the brake pedal height. The lower edge of the brake pedal should be $6\frac{1}{4}$ in. (158 mm) from the floor. Adjust pedal stop as required. Check brake pedal and **ensure there is $\frac{1}{4}$ in (6 mm) free movement in the pedal** before pressure is felt. To obtain this it may be necessary to adjust the length of the master cylinder push rod. In addition, examine the trunnion distance piece to see if it is damaged due to crushing.

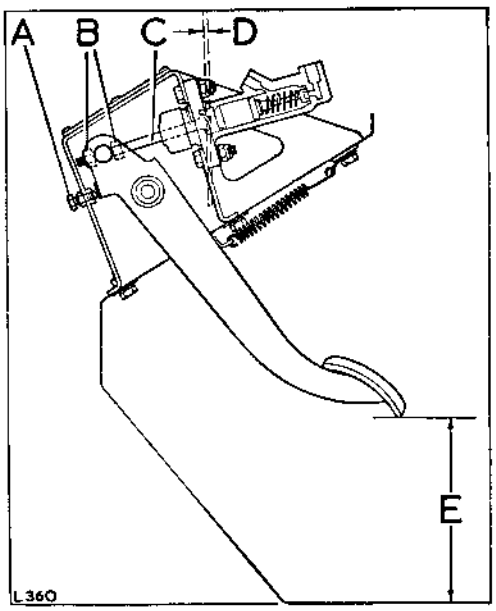


**Fig. H1-27. Brake pedal setting**

A—Pedal stop
B—Locknuts for master cylinder push rod
C—Master cylinder push rod
D—$\frac{1}{16}$ in. (1,5 mm)
E—Pedal height $6\frac{1}{4}$ in. (158 mm)

## Brake pedal (with Girling mechanical type servo), remove and refit—Operation H1-4A

*(For removal and refitting instructions for the brake pedal used in all applications other than above, Operation* H1-4 *refers)*

Workshop hand tools:
Spanner sizes: $\frac{7}{16}$ in. AF, $\frac{1}{2}$ in. AF, $\frac{5}{8}$ in. AF open end
Pliers, hammer, pin punch

### To remove

1. Disconnect the electrical lead from the switch fitted to the pedal bracket.
2. Disconnect the outlet pipe from the master cylinder. Fit a blanking plug to the outlet aperture or drain the fluid reservoir, to prevent fluid spillage.

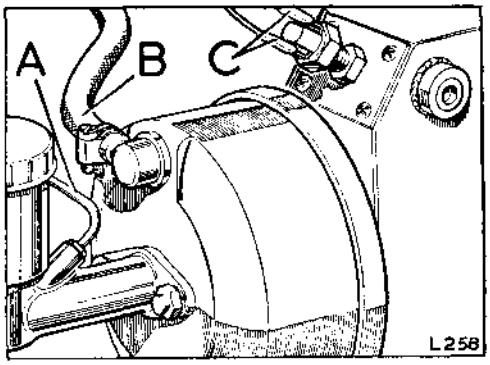


**Fig. H1-28. Pipe and lead connections**

A—Outlet pipe from master cylinder
B—Vacuum pipe from servo unit
C—Lead from brake switch

3. Disconnect the vacuum pipe from the servo unit.
4. Remove the fixings securing the brake pedal bracket to the toe box.

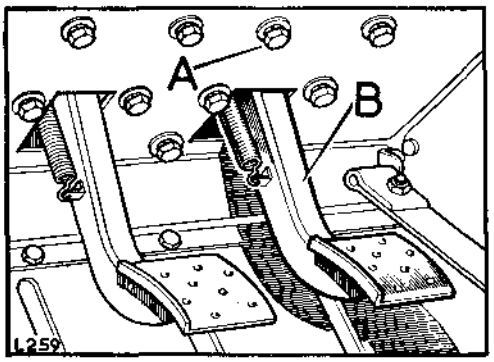


**Fig. H1-29. Fixings for brake pedal bracket**

A—Fixings (6 off)
B—Brake pedal

5. Carefully withdraw the brake pedal and bracket assembly from the engine compartment, manoeuvring the pedal through the aperture in the toe box.
6. Disconnect the brake pedal return springs.
7. Remove the split pin and pivot pin from the brake pedal to servo coupling.

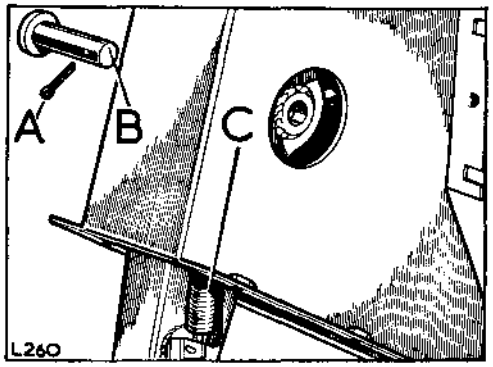


**Fig. H1-30. Pedal return spring and servo coupling**

A—Split pin, securing pivot
B—Pivot pin for coupling to servo
C—Return springs for brake pedal

8. Using a suitable punch, drift out pin from the pedal shaft.
9. Remove pedal shaft.

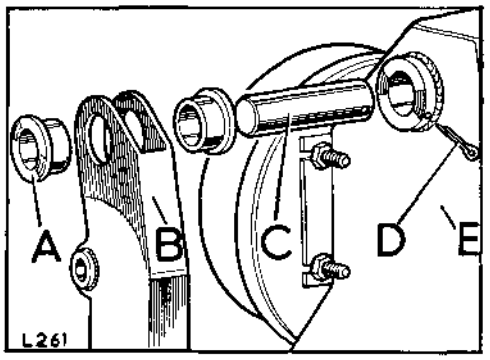


**Fig. H1-31. Brake pedal assembly**

A—Bush for pedal
B—Brake pedal
C—Shaft for pedal
D—Pin for pedal shaft
E—Bracket for pedal

## Operation H1-4A—*continued*

10. Withdraw the brake pedal complete with bushes.
11. If required, remove the bushes from the pedal.

**To refit**

1. If removed, fit the bushes to the brake pedal. New bushes must be reamered to .625 in. + .001 in. (15,875 mm + 0,025 mm).
2. Smear the pedal bushes and shaft with general purpose grease; locate the pedal in position in the bracket and secure with the shaft and pin.
3. Using a new split pin, fit the coupling pin between the pedal and servo unit.
4. Connect the pedal return springs.
5. Apply a waterproof sealant between the joint flanges of the pedal bracket and the toe box. A suitable sealant is 'Seelastrip', manufactured by Expandite Ltd, Chase Road, London NW10.
6. Carefully locate the brake pedal and bracket assembly in position on the toe box, manoeuvring the pedal through the aperture in the toe box, and secure in position. See Fig. H1-29.
7. Connect the vacuum pipe to the servo unit, the fluid outlet pipe to the master cylinder and the electrical lead to the brake pedal switch.
8. Check, and if necessary, adjust the brake pedal switch to operate at $\frac{3}{4}$ in. to 1 in. (19 mm to 25 mm) of pedal movement.
9. Bleed the complete braking system. Operation H1-1.

## Master cylinder (centre valve 'CV' type), remove and refit—Operation H1-5

*(For overhaul instructions, Operation H1-6 refers)*
*(For removal and refitting instructions for the master cylinder used in conjunction with the Girling mechanical type servo unit, Operation H1-5A refers)*

Workshop hand tools:
Spanner sizes: $\frac{7}{16}$ in. AF, $\frac{1}{2}$ in. AF open end
Pliers, screwdriver (medium)

### General

There are two types of master cylinder in use, and care should be taken to correctly identify the unit concerned. A cylinder of the centre valve ('CV') type is normally fitted to 88 vehicles, and a cylinder of the compression barrel ('CB') type is fitted to 109 vehicles. For removal and refitting instructions of the 'CB' type master cylinder, Operation H1-7 refers.

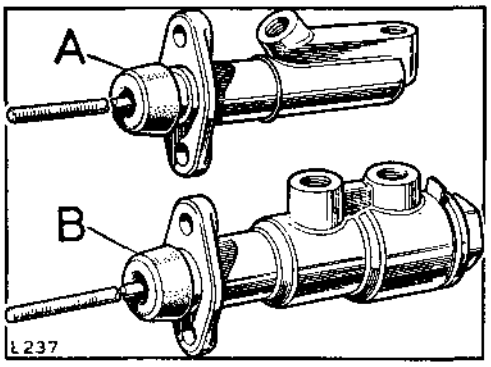


**Fig. H1-32. Identification of master cylinders**

A—'CV' type master cylinder
B—'CB' type master cylinder

### To remove

1. Remove the fluid reservoir. Operation H1-3.
2. Disconnect the inlet and outlet pipes from the brake master cylinder.

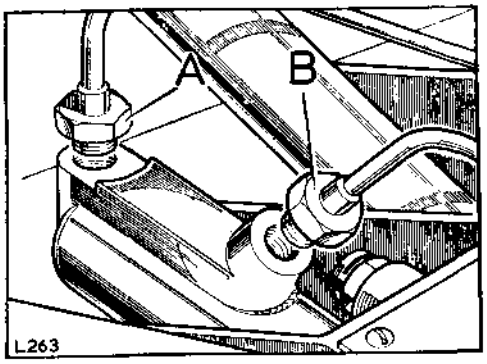


**Fig. H1-33. Pipe connections at brake master cylinder**

A—Inlet pipe
B—Outlet pipe

3. Remove the top cover and gasket from the brake pedal bracket.

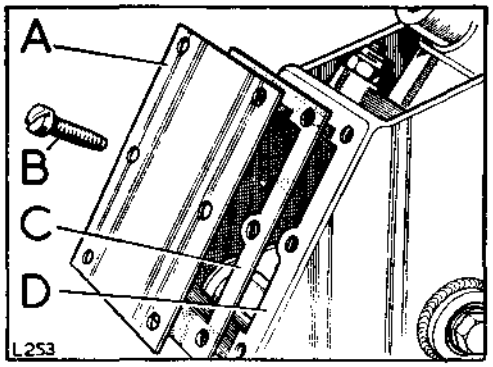


**Fig. H1-34. Top cover for brake pedal bracket**

A—Top cover
B—Fixings for top cover
C—Gasket
D—Bracket

4. Remove the nut and plain washer securing the master cylinder push rod to the brake pedal trunnion.
5. Remove the fixings and withdraw the master cylinder from the brake pedal bracket.

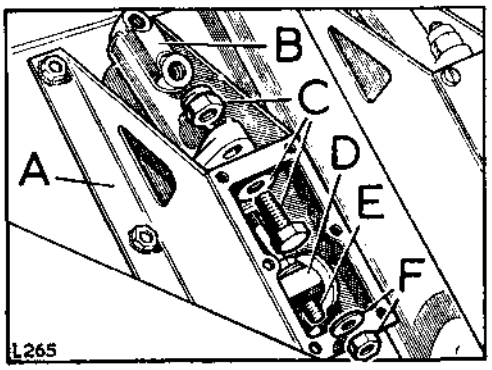


**Fig. H1-35. Fixings for master cylinder**

A—Bracket for brake pedal
B—Master cylinder
C—Fixings
D—Brake pedal trunnion
E—Push-rod
F—Fixings, push-rod trunnion

## Operation H1-5—*continued*

**To refit**

1. Fit the master cylinder to the brake pedal bracket. See Fig. H1-35
2. Connect the inlet and outlet pipes to the master cylinder. See Fig. H1-33.
3. Fit the fluid reservoir. Operation H1-3.
4. Slacken both locknuts on the master cylinder push rod, and adjust the push rod by rotating until there is $\frac{1}{16}$ in. (1,5 mm) free play between the push rod and master cylinder piston, then tighten both locknuts.

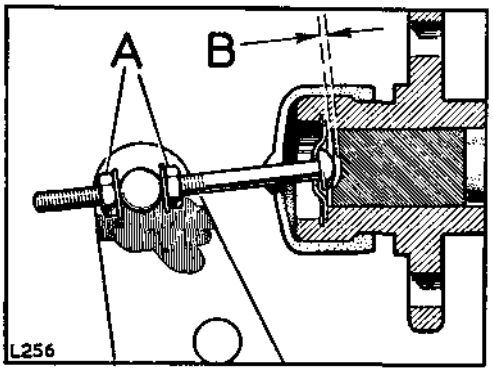


**Fig. H1-36. Push rod setting**

A—Locknuts for push rod
B—$\frac{1}{16}$ in. (1,5 mm) free play

5. Bleed the complete braking system. Operation H1-1. Bleed the clutch system, Section B.
6. Re-check, and if necessary, adjust the push rod setting.
7. Fit the top cover and gasket to the brake pedal bracket. See Fig. H1-34.

## Master cylinder ('CV' type with Girling mechanical type servo unit), remove and refit Operation H1-5A

*(For overhaul instructions, Operation* H1-6A *refers)*
*(For removal and refitting instructions for the 'CV' type master cylinder used in all applications other than above, Operation* H1-5 *refers)*

Workshop hand tools:
Spanner sizes: $\frac{1}{2}$ in. AF, $\frac{9}{16}$ in. AF open end, $\frac{5}{8}$ in. AF socket
Pliers, long-nosed

### To remove

1. Lift the bonnet and prop open.
2. Disconnect the outlet pipe from the brake master cylinder.
3. Remove the fixings and withdraw the master cylinder complete with reservoir.

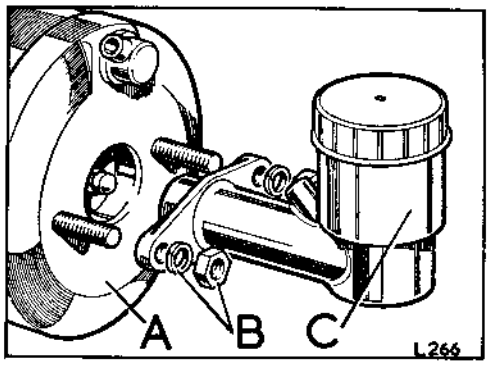


**Fig. H1-37. Master cylinder fixings**
A—Servo unit
B—Fixings for master cylinder
C—Master cylinder complete with reservoir

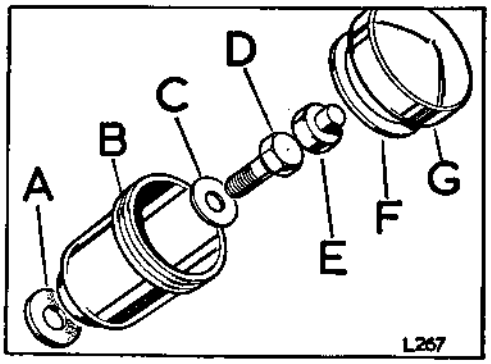


**Fig. H1-38. Fluid reservoir**
A—Seal, reservoir to master cylinder
B—Reservoir body
C—Plain washer
D—Adaptor bolt
E—Cover for adaptor bolt
F—Gasket for filler cap
G—Filler cap

4. Remove the filler cap from the reservoir and drain all the fluid.
5. Using long-nosed pliers, withdraw the plastic cover from the reservoir adaptor bolt.
6. Remove the adaptor bolt and withdraw the plain washer, reservoir body, and seal. DO NOT attempt to remove the distance piece from the base of the reservoir.

### To refit

1. Ensure that the fluid reservoir components are clean.
2. Smear the seal for the reservoir base with Castrol-Girling rubber grease and place it in position.
3. Locate the fluid reservoir in position on the master cylinder, and secure with the plain washer and adaptor bolt. Tighten the adaptor bolt to a torque figure of 20 to 25 lbs ft (2,8 to 3,5 mkg).
4. Push the plastic cover over the head of the adaptor bolt.
5. If removed, fit the gasket to the filler cap.
6. Fit the filler cap to the reservoir.
7. Fit the master cylinder and reservoir assembly to the servo unit. Tighten the master cylinder securing nuts to a torque figure of 16 to 19 lbs ft (2,2 to 2,6 mkg).
8. Connect the outlet pipe to the master cylinder.
9. Bleed the complete braking system. Operation H1-1.

## Master cylinder (centre valve 'CV' type), overhaul—Operation H1-6

*(For removal and refitting instructions, Operation* H1-5 *refers)*
*(For overhaul instructions for the master cylinder used in conjunction with the Girling mechanical type servo unit, Operation* H1-6A *refers)*

Workshop hand tools:
Spanner size: $\frac{1}{2}$ in. AF
Pliers, screwdriver (small)

### General

There are two types of brake master cylinder in use, and care should be taken to correctly identify the unit concerned. A cylinder of the centre valve ('CV') type is normally fitted to 88 vehicles, and a cylinder of the compression barrel ('CB') type is fitted to 109 vehicles. For overhaul instructions of the 'CB' type master cylinder, Operation H1-8 refers.

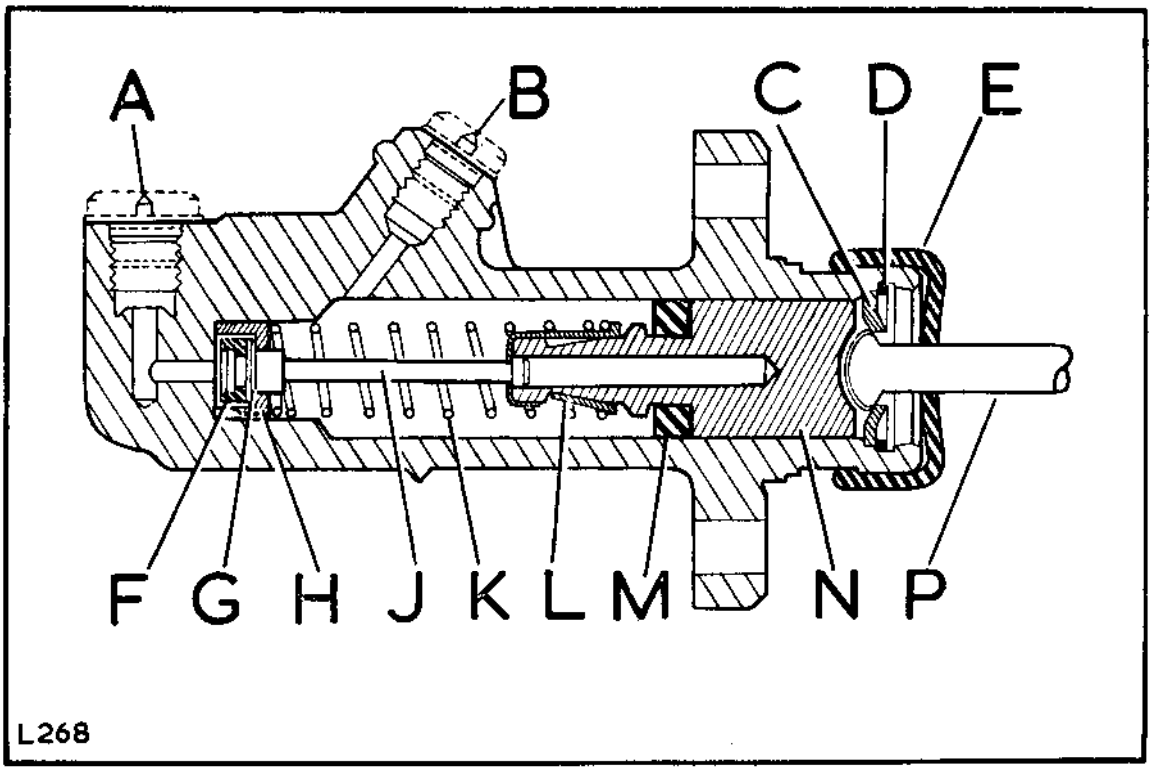


**Fig. H1-39. Centre valve ('CV') type master cylinder**

A—Inlet port
B—Outlet port
C—Spring washer
D—Circlip
E—Dust cover
F—Valve seal
G—Spring washer
H—Valve spacer
J—Valve stem
K—Return spring
L—Spring retainer
M—Piston seal
N—Piston
P—Push rod

## Operation H1-6—*continued*

### To dismantle

1. Remove the plain washer, nut and rubber cover from the push rod.

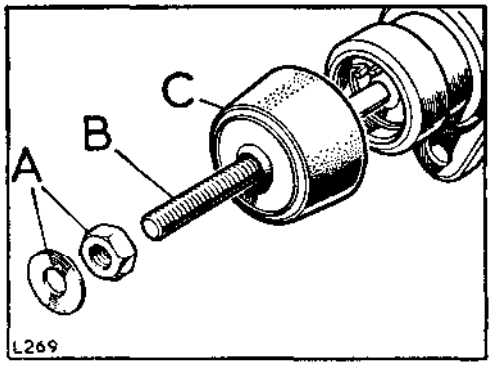


**Fig. H1-40. Push rod cover**

A—Locknut and washer
B—Push rod
C—Rubber cover

2. Remove the circlip and withdraw the push rod and retaining washer.

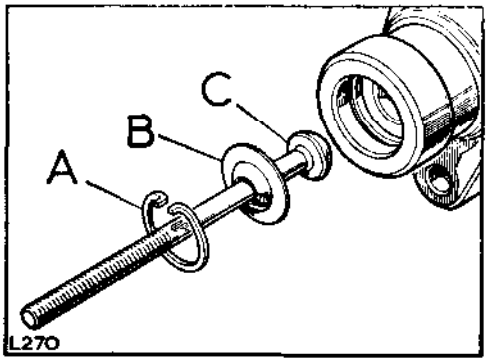


**Fig. H1-41. Push rod fixings**

A—Circlip
B—Retaining washer
C—Push rod

3. Withdraw the piston assembly from the master cylinder. If necessary, apply a low air pressure to the outlet port to expel the piston.

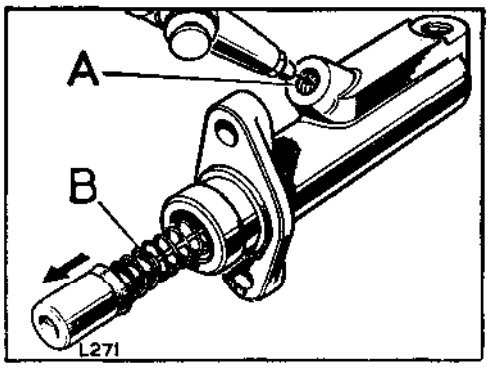


**Fig. H1-42. Withdrawing piston assembly**

A—Apply low air pressure to outlet port
B—Piston assembly

4. Prise the locking prong of the spring retainer clear of the piston shoulder and withdraw the piston. Remove the piston seal.

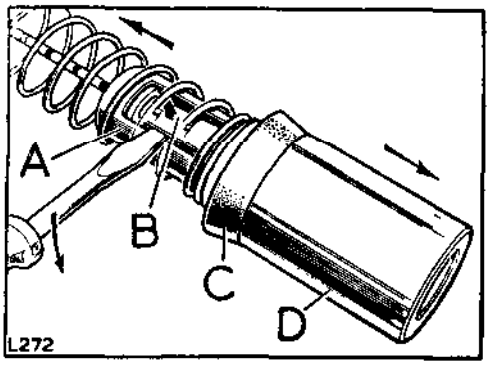


**Fig. H1-43. Removing piston**

A—Spring retainer
B—Locking prong
C—Seal for piston
D—Piston

## Operation H1-6—*continued*

5. Compress the spring and position the valve stem to align with the larger hole in the spring retainer. Withdraw the spring and retainer.

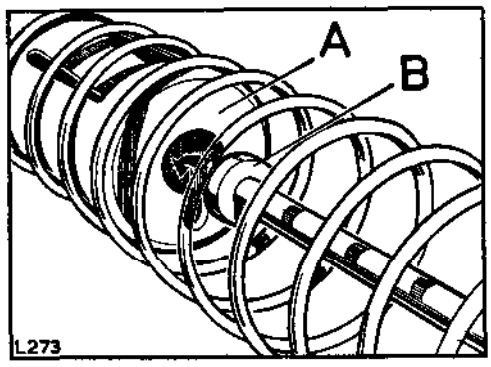


**Fig. H1-44. Valve stem to spring retainer location**

A—Spring retainer
B—Valve stem

6. Slide the valve spacer over the valve stem. Remove the spring washer and valve seal from the stem.

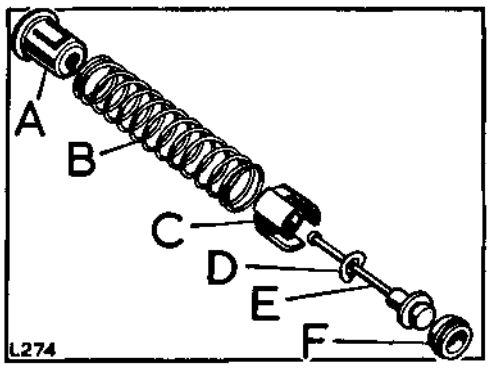


**Fig. H1-45. Spring and valve assembly**

A—Spring retainer
B—Spring
C—Valve spacer
D—Spring washer
E—Valve stem
F—Valve seal

### Inspection

1. Clean all components in Girling cleaning fluid and allow to dry.
2. Examine the cylinder bore and piston, ensure that they are smooth to the touch with no corrosion, score marks or ridges. If there is any doubt, fit new replacements.
3. The seals and dust cover should be replaced with new components. These items are all included in the master cylinder overhaul kit.

### To assemble

1. Smear the seals with Castrol-Girling rubber grease and the remaining internal items with Castrol-Girling Brake and Clutch Fluid.
2. Fit the valve seal, flat side first, to the end of the valve stem.
3. Place the spring washer, domed side first, over the small end of the valve stem, then fit the valve spacer, legs first, and the coil spring.

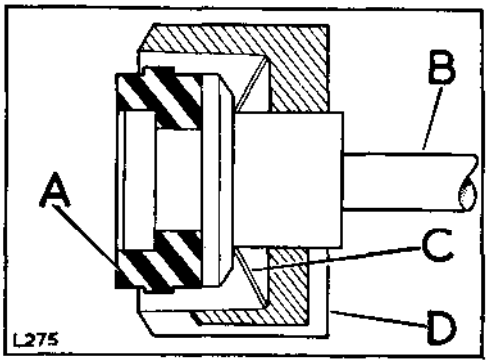


**Fig. H1-46. Valve assembly**

A—Valve seal
B—Valve stem
C—Spring washer
D—Valve spacer

4. Insert the retainer into the spring and compress until the stem passes through the keyhole and is engaged in the centre. See Fig. H1-44.

## Operation H1-6—*continued*

5. Fit the seal, large diameter last, to the piston.
6. Insert the piston into the spring retainer and engage the locking prong.

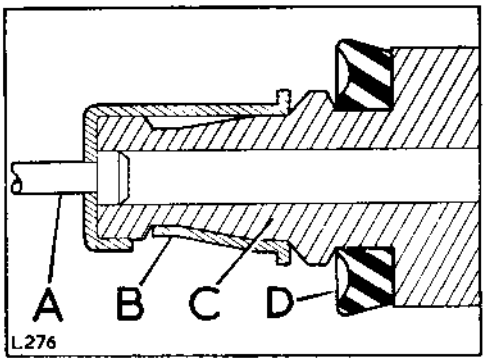


**Fig. H1-47. Piston and spring retainer**

A—Valve stem
B—Prong in engaged position
C—Piston
D—Seal

7. Smear the piston with Castrol-Girling rubber grease and insert the assembly, valve end first, into the cylinder.
8. Fit the push rod, retaining washer and circlip.

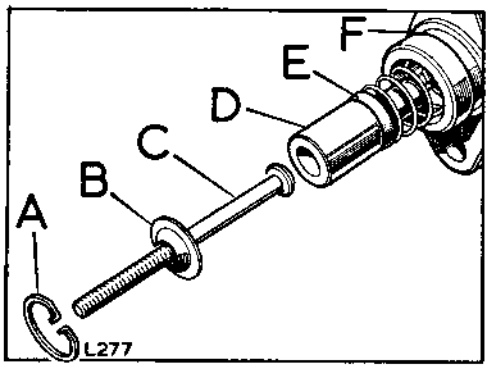


**Fig. H1-48. Piston and push rod assembly**

A—Circlip
B—Retaining washer
C—Push rod
D—Piston
E—Seal for piston
F—Cylinder

9. Smear liberally the inside of the dust cover with Castrol-Girling rubber grease and fit the cover over the push rod and cylinder.
10. Fit the locknut and washer to the push rod.

## Master cylinder ('CV' type with Girling mechanical type servo unit), to overhaul Operation H1-6A

*(For removal and refitting instructions, Operation* H1-5A *refers)*
*(For overhaul instructions for the 'CV' type master cylinder used in all applications other than above, Operation* H1-6 *refers)*

Workshop hand tools:
Screwdriver (small)

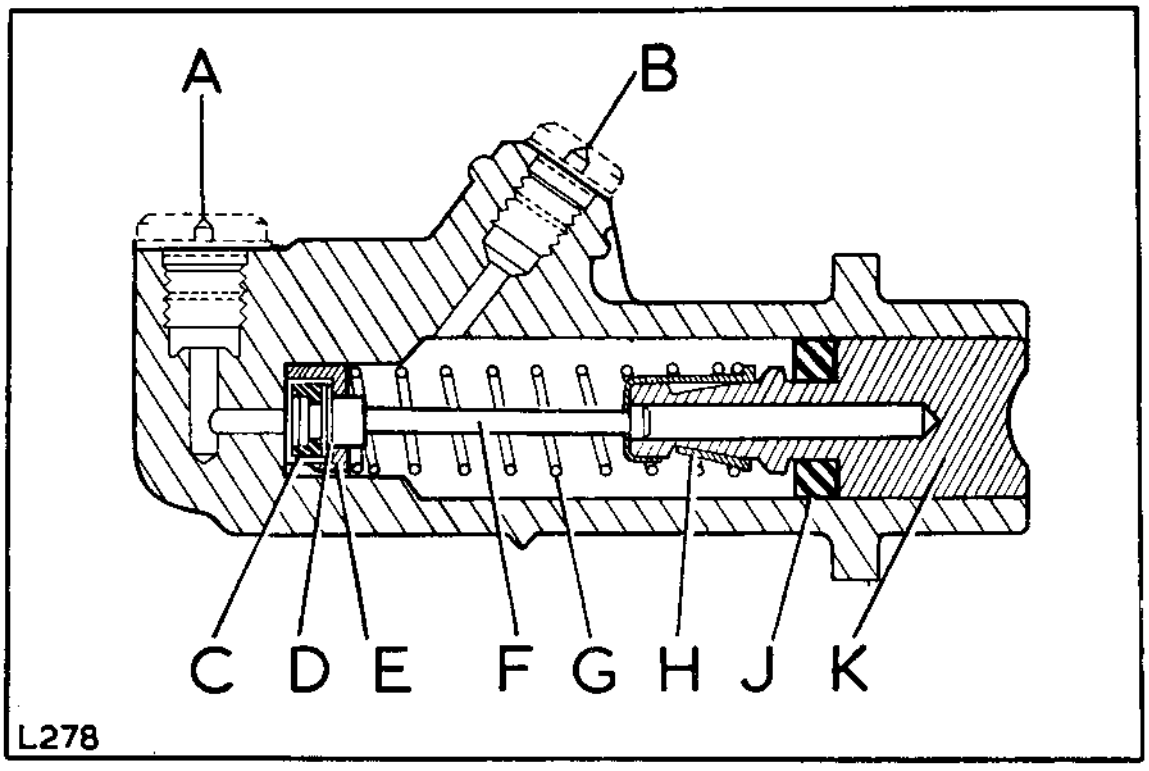


**Fig. H1-49. Brake master cylinder components**

A—Inlet port
B—Outlet port
C—Valve seal
D—Spring washer
E—Valve spacer
F—Valve stem
G—Return spring
H—Spring retainer
J—Piston seal
K—Piston

## Operation H1-6A—*continued*

### To dismantle

1. Withdraw the piston assembly from the master cylinder. If necessary, apply a low air pressure to the outlet port to expel the piston.

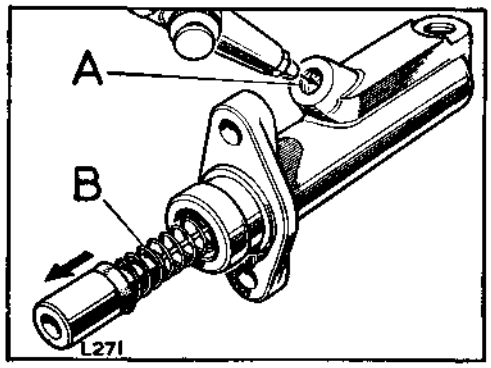


**Fig. H1-50. Withdrawing piston assembly**

A—Apply low air pressure to outlet port
B—Piston assembly

2. Prise the locking prong of the spring retainer clear of the piston shoulder and withdraw the piston. Remove the piston seal.

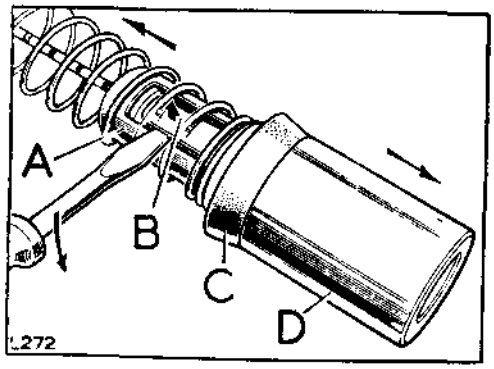


**Fig. H1-51. Removing piston**

A—Spring retainer
B—Locking prong
C—Seal for piston
D—Piston

3. Compress the spring and position the valve stem to align with the larger hole in the spring retainer. Withdraw the spring and retainer.

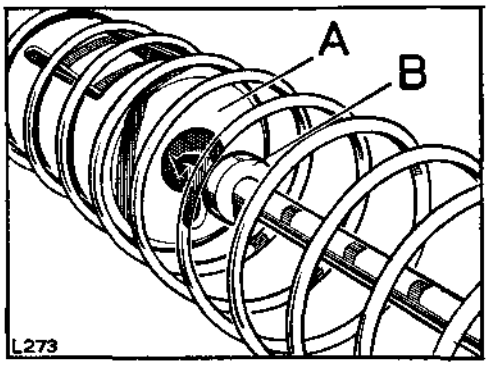


**Fig. H1-52. Valve stem to spring retainer location**

A—Spring retainer
B—Valve stem

4. Slide the valve spacer over the valve stem. Remove the spring washer and valve seal from the stem.

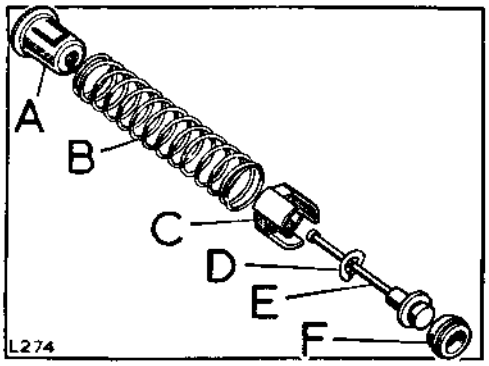


**Fig. H1-53. Spring and valve assembly**

A—Spring retainer
B—Spring
C—Valve spacer
D—Spring washer
E—Valve stem
F—Valve seal

## Operation H1-6A—*continued*

### Inspection

1. Clean all components in Girling cleaning fluid and allow to dry.
2. Examine the cylinder bore and piston. Ensure that they are smooth to the touch with no corrosion, score marks or ridges. If there is any doubt, fit new replacements.
3. The seals should be replaced with new components. These items are all included in the master cylinder overhaul kit.

### To assemble

1. Smear the seals with Castrol-Girling rubber grease and the remaining internal items with Castrol-Girling Brake and Clutch Fluid.
2. Fit the valve seal, flat side first, to the end of the valve stem.

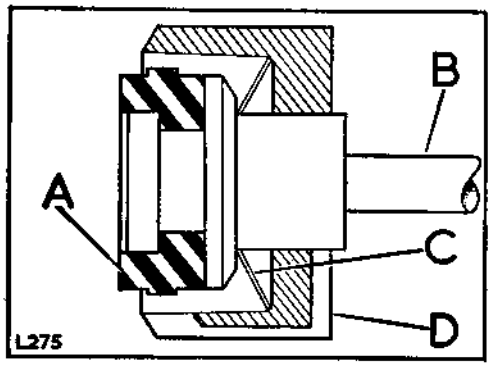


**Fig. H1-54. Valve assembly**

A—Valve seal
B—Valve stem
C—Spring washer
D—Valve spacer

3. Place the spring washer, domed side first, over the small end of the valve stem, then fit the valve spacer, legs first, and the coil spring.
4. Insert the retainer into the spring and compress until the stem passes through the keyhole and is engaged in the centre. See Fig. H1-52.
5. Fit the seal, large diameter last, to the piston.
6. Insert the piston into the spring retainer and engage the locking prong.

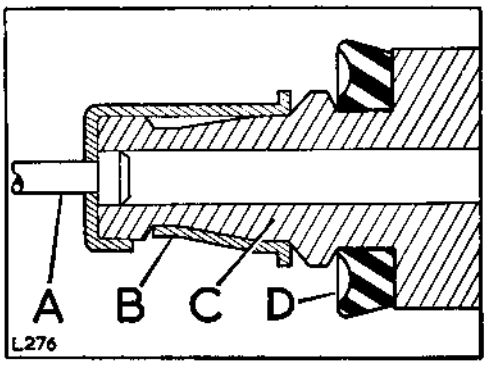


**Fig. H1-55. Piston and spring retainer**

A—Valve stem
B—Prong in engaged position
C—Piston
D—Seal

7. Smear the piston with Castrol-Girling rubber grease and insert the assembly, valve end first, into the cylinder.
8. Liberally smear Castrol-Girling rubber grease inside the piston end of the master cylinder.

## Master cylinder (compression barrel 'CB' type), remove and refit
## Operation H1-7

*(For overhaul instructions, Operation H1-8 refers)*

Workshop hand tools:
Spanner sizes: $\frac{7}{16}$ in. AF, $\frac{1}{2}$ in. AF open end
Pliers, screwdriver (medium)

### General

There are two types of master cylinder in use, and care should be taken to correctly identify the unit concerned. A cylinder of the centre valve ('CV') type is normally fitted to 88 vehicles, and a cylinder of the compression barrel ('CB') type is fitted to 109 vehicles. For removal and refitting instructions of the 'CV' type master cylinder, Operation H1-5 refers.

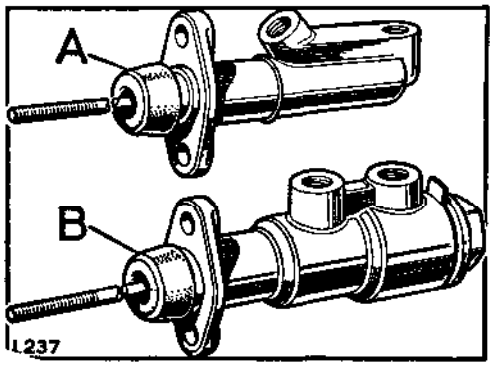


**Fig. H1-56. Identification of master cylinders**
A—'CV' type master cylinder
B—'CB' type master cylinder

### To remove

1. Remove the fluid reservoir. Operation H1-3.
2. Disconnect the inlet and outlet pipes from the brake master cylinder.

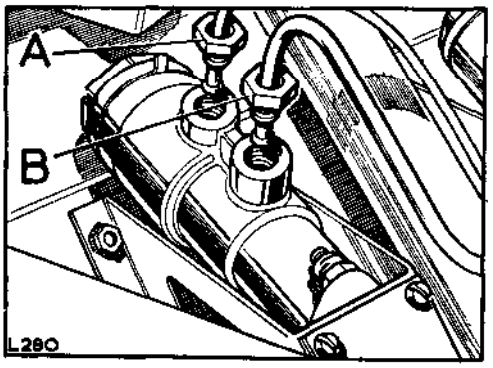


**Fig. H1-57. Pipe connections at brake master cylinder**
A—Outlet pipe
B—Inlet pipe

3. Disconnect the return spring from the brake pedal.
4. Remove the fixings securing the brake pedal bracket to the toe box.

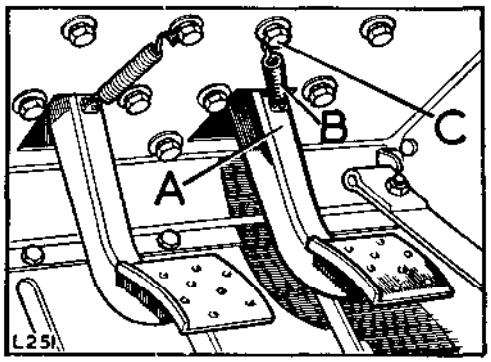


**Fig. H1-58. Brake pedal bracket fixings**
A—Brake pedal
B—Return spring for pedal
C—Fixings for brake pedal bracket (6 off)

5. Carefully withdraw the brake pedal and bracket assembly from the engine compartment, manoeuvring the pedal through the aperture in the toe box.

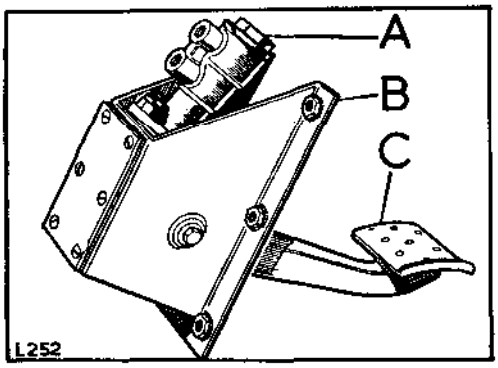


**Fig. H1-59. Brake pedal and bracket assembly**
A—Master cylinder
B—Bracket for brake pedal
C—Brake pedal

## Operation H1-7—*continued*

6. Remove the top cover and gasket from the brake pedal bracket.

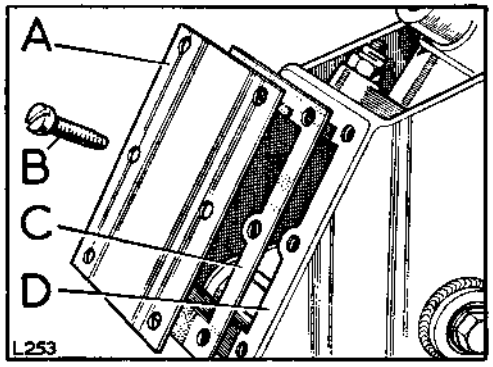


**Fig. H1-60. Top cover for brake pedal bracket**

A—Top cover
B—Fixings for top cover
C—Gasket
D—Bracket

7. Remove the nut and plain washer retaining the master cylinder push rod to the brake pedal trunnion.
8. Remove the fixings and withdraw the master cylinder from the brake pedal bracket.

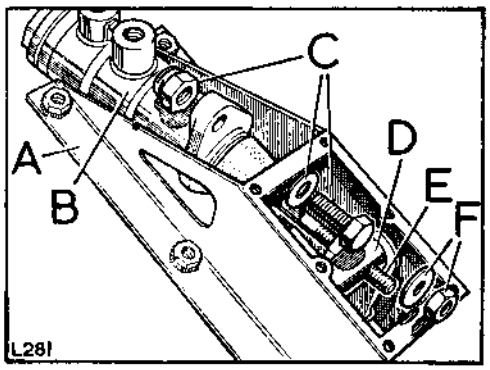


**Fig. H1-61. Fixings for master cylinder**

A—Bracket for brake pedal
B—Master cylinder
C—Fixings for master cylinder
D—Brake pedal trunnion
E—Push-rod for master cylinder
F—Fixings, push rod to trunnion

**To refit**

1. Fit the master cylinder to the brake pedal bracket See Fig. H1-61.
2. Place the gasket in position on the securing flange of the brake pedal bracket. If necessary, use a little Bostik adhesive to retain the gasket.
3. Carefully locate the brake pedal and bracket assembly in position on the toe box, manoeuvring the pedal through the aperture in the toe box.

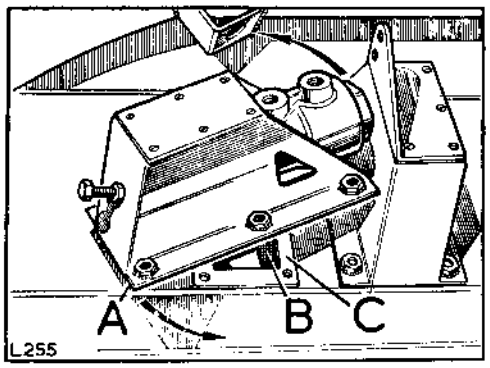


**Fig. H1-62. Fitting brake pedal and bracket**

A—Brake pedal and bracket
B—Aperture in toe box
C—Gasket

4. Secure the brake pedal and bracket assembly to the toe box, ensuring that the gasket remains in posiition. See Fig. H1-58.
5. Connect the return spring between the brake pedal and the toe box bracket.
6. Connect the inlet and outlet pipes to the brake master cylinder. See Fig. H1-57.
7. Fit the fluid reservoir. Operation H1-3.
8. Slacken both locknuts on the master cylinder push rod, and adjust the push rod by rotating until there is $\frac{1}{16}$ in. (1,5 mm) free play between the push rod and master cylinder piston, then tighten both locknuts.
9. Bleed the complete braking system. Operation H1-1. Bleed the clutch system. Section B.

## Operation H1-7—*continued*

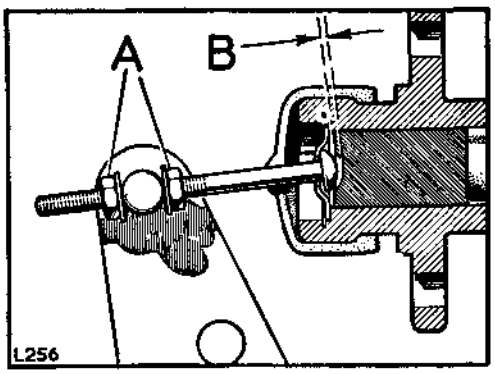


**Fig. H1-63. Push-rod setting**

A—Locknuts for push rod
B—$\frac{1}{16}$ In. (1,5 mm) free play

10. Recheck, and if necessary, adjust the push rod setting.
11. Fit the top cover and gasket to the brake pedal bracket. See Fig. H1-60.

## Master cylinder (compression barrel 'CB' type), overhaul—Operation H1-8

*(For removal and refitting instructions, Operation H1-7 refers)*

Workshop hand tools:
Spanner sizes: ½ in. AF, 1½ in. AF open end
Pliers

### General

There are two types of brake master cylinder in use, and care should be taken to correctly identify the unit concerned. A cylinder of the centre valve ('CV') type is normally fitted to 88 vehicles, and a cylinder of the compression barrel ('CB') type is fitted to 109 vehicles. For overhaul instructions of the 'CV' type master cylinder, Operation H1-6 refers.

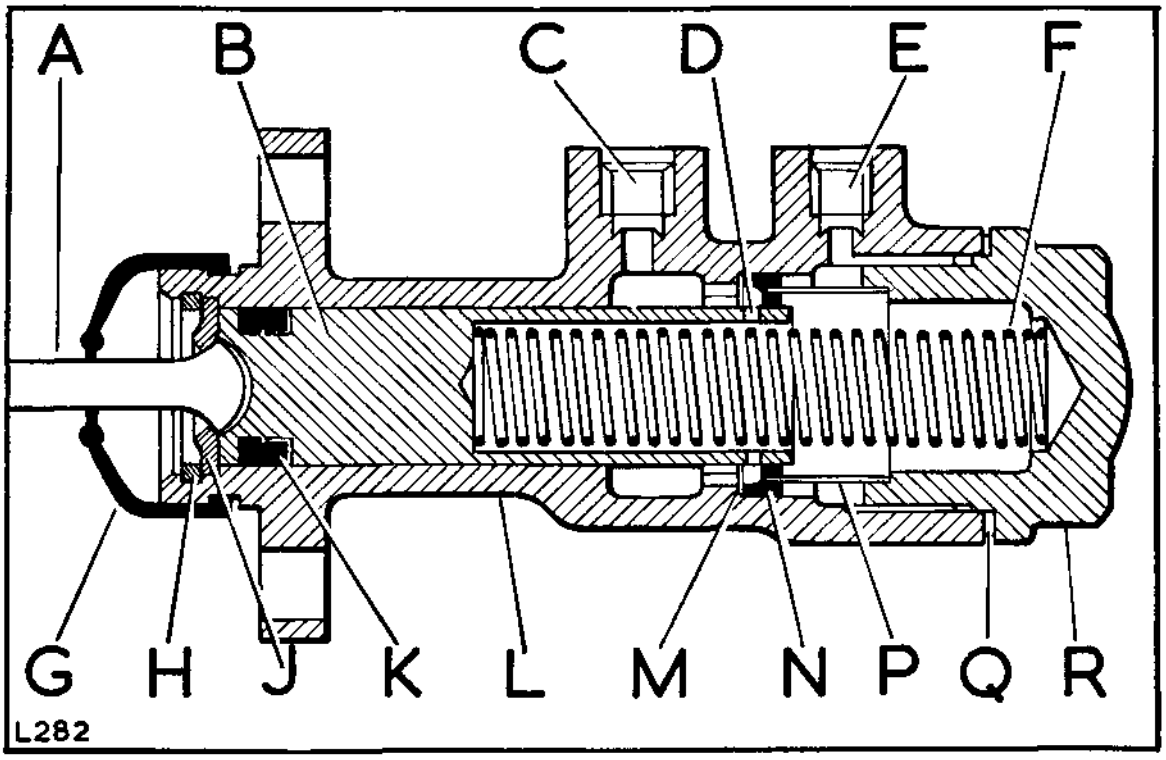


**Fig. H1-64. Compression barrel ('CB') type master cylinder**

A—Push rod
B—Piston
C—Inlet from reservoir
D—Inlet ports
E—Outlet to wheel cylinders
F—Piston spring
G—Dust cover
H—Circlip
J—Retaining washer
K—End seal
L—Cylinder
M—Shim
N—Recuperating seal
P—Seal support
Q—Gasket
R—End cap

## Operation H1-8—*continued*

### To dismantle

1. Remove the plain washer, nut and rubber cover from the push rod.

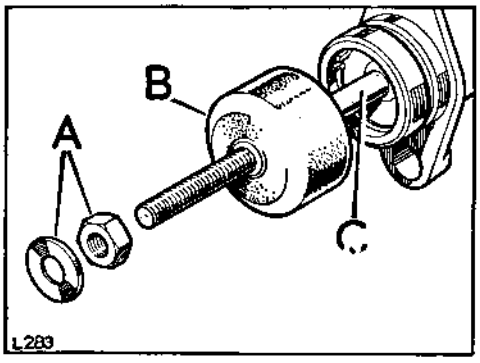


**Fig. H1-65. Push-rod cover**

A—Locknut and washer
B—Rubber cover
C—Push rod

2. Remove the circlip and withdraw the push rod and retaining washer.

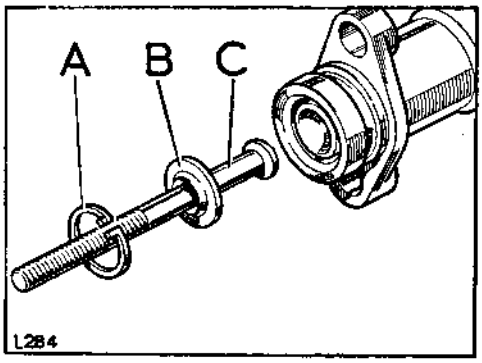


**Fig. H1-66. Push rod fixings**

A—Circlip
B—Retaining washer
C—Push rod

3. Withdraw the piston and spring from the master cylinder. If necessary, apply a low air pressure to the outlet port to expel the piston.

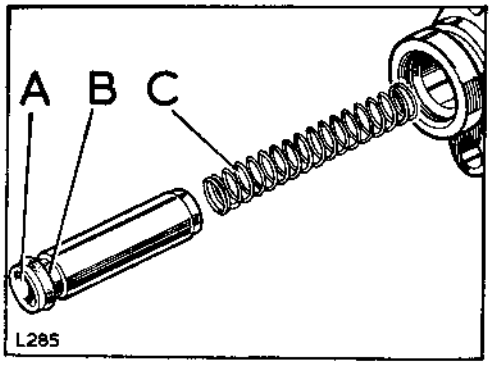


**Fig. H1-67. Piston assembly**

A—Piston
B—End seal
C—Spring for piston

4. Remove the end cap and gasket from the master cylinder and withdraw the recuperating seal and shim.

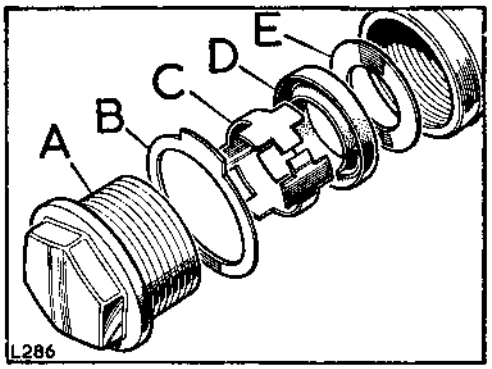


**Fig. H1-68. End cap and seal**

A—End cap
B—Gasket for end cap
C—Support for seal
D—Recuperating seal
E—Shim

## Operation H1-8—*continued*

5. If required, withdraw the seal support from the end cap.

### Inspection

1. Clean all components in Girling cleaning fluid and allow to dry.
2. Examine the cylinder bore and piston; ensure that they are smooth to the touch with no corrosion, score marks or ridges. If there is any doubt, fit new replacements.
3. The seals, seal support, gasket and dust cover should all be replaced with new components. These items are all included in the master cylinder overhaul kit.

### To re-assemble

1. Smear the seals with Castrol-Girling rubber grease and the remaining internal items with Castrol-Girling Brake and Clutch Fluid.
2. Fit the end seal, large diameter first, to the push rod end of the piston, ensuring that the inner diameter locates in the first groove.

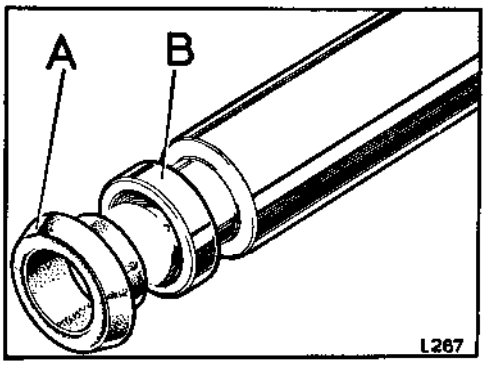


**Fig. H1-69. End seal location**

A—End seal
B—Push rod end of piston

3. Insert the piston, seal end last, into the push rod end of the cylinder, rotating the piston to ease in the seal.
4. Fit the push rod, retaining washer and circlip.

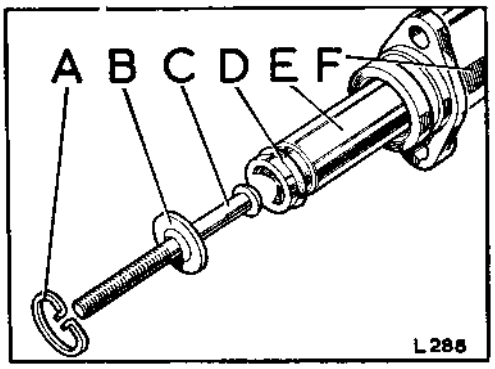


**Fig. H1-70. Piston and push rod assembly**

A—Circlip
B—Retaining washer
C—Push rod
D—End seal
E—Piston
F—Cylinder

5. Place the shim in the cylinder and locate it over the end of the piston.

**Note:** Latest type master cylinders have a spigotted plastic washer in place of the shim.

6. Fit the recuperating seal with the back against the shim.

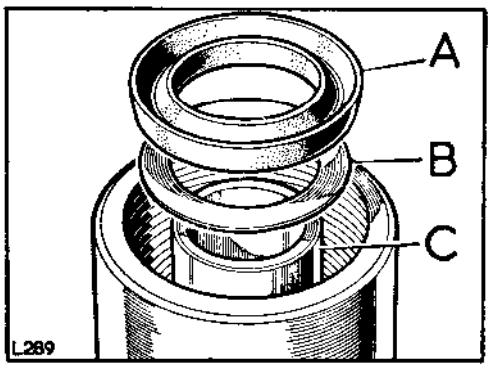


**Fig. H1-71. Fitting shim and seal**

A—Recuperating seal
B—Shim
C—Piston

## Operation H1-8—*continued*

7. Place the seal support in position.

   **Note:** Two types of seal support are in use. If the support is plastic, locate it into the seal. If it is metal, locate it into the end cap.

8. Fit the spring into the cylinder, locating it into the counter-bore in the piston.

9. Fit the end cap and gasket ensuring that it is securely tightened.

10. Smear liberally the inside of the dust cover with Castrol-Girling rubber grease and fit the cover over the push rod and cylinder.

11. Fit the locknut and washer to the push rod.

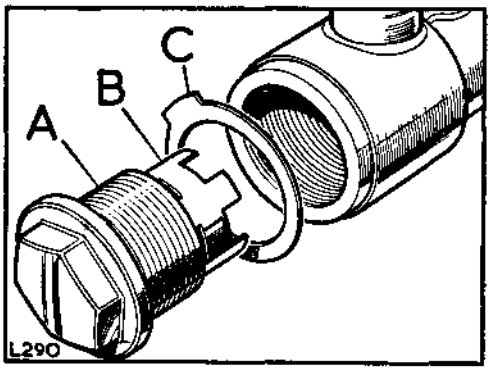


**Fig. H1-72. End cap for cylinder**

A—End cap
B—Seal support
C—Gasket for end cap

## Brake flexible pipes, remove and refit—Operation H1-9

Workshop hand tools:
Spanner sizes: $\frac{9}{16}$ in. AF, $\frac{5}{8}$ in. AF open end

### To remove

1. Disconnect the front brake pipe at the connection with the flexible pipe—one each side of the vehicle—and withdraw the flexible pipe from the chassis bracket. Then depress the brake pedal and wedge it in that position to prevent further leakage of brake fluid. When depressing the brake pedal, take precautions to avoid fluid spillage.

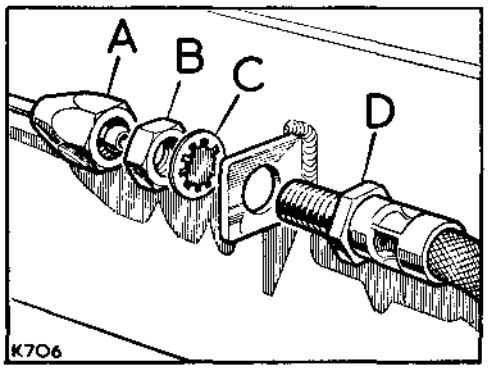


**Fig. H1-73. Brake pipe connections**

A—Pipe from master cylinder
B—Locknut
C—Shakeproof washer
D—Flexible brake pipe

2. Unscrew and withdraw the flexible pipe from the brake anchor plate.
3. Disconnect the rear brake pipe at the connection with the flexible pipe and withdraw the flexible pipe from the chassis bracket. Then depress the brake pedal and wedge it in that position to prevent further leakage of brake fluid. When depressing the brake pedal, take precautions to avoid fluid spillage.
4. Unscrew and withdraw the flexible pipe from the brake pipe tee-piece at the rear axle.

### To refit

1. Fit the front brake flexible pipe, together with a joint washer, to the brake anchor plate.
2. Connect the front brake pipe and flexible pipe coupling. See Fig. H1-73.
3. Fit the rear brake flexible pipe, together with a joint washer, to the tee-piece at the rear axle case.
4. Connect the rear brake pipe and flexible pipe coupling. See Fig. H1-73.
5. Ensure that brake pipes cannot chafe against any adjacent component. If necessary, reposition brake pipes.
6. Bleed the complete brake system. Operation H1-1.

**Important:** Whenever any section of the pressure pipe system has been removed, a careful check should be made on replacement to ensure that all the connections and joint washers are in good condition. A faulty connection will admit air into the system, so causing poor and 'spongy' braking.

## Brake anchor plate, front and rear, 10 in., 88 models, overhaul—Operation H1-10

*(For removal and refitting instructions, Operations* E1-5 *and* F1-4 *refers)*
*(For brake shoe relining instructions, Operation* H1-12 *refers)*

Workshop hand tools:
Spanner sizes: $\frac{7}{16}$ in. AF, $\frac{1}{2}$ in. AF, $\frac{11}{16}$ in. AF open end

### To dismantle

**Note:** It is not essential to remove the brake anchor plate from the vehicle; the brake shoe components are accessible after removing the road wheel and brake drum.

1. Turn back the adjuster cam to release the tension of the leading shoe pull-off spring and remove the spring.
2. Remove the trailing shoe anchor plate.

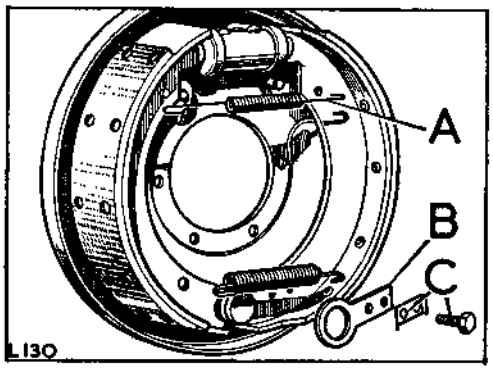


**Fig. H1-74. Fixings for brake shoes**

A—Spring for leading shoe
B—Anchor for trailing shoe
C—Fixings for anchor

3. Remove the brake shoes together from the pivot end first; part them by disconnecting the return spring.

**Note:** If the wheel cylinder is not to be removed, e.g., when relining the shoes, it is advisable to use a strong rubber band to retain the cylinder pistons to prevent loss of fluid and admission of air to the system.

4. Disconnect the flexible pipe from the wheel cylinder. If the brake anchor plate is fitted to the vehicle, the flexible pipe MUST FIRST be disconnected at the chassis end. Also take precautions to prevent fluid spillage.
5. Remove the wheel cylinder and detach the rubber dust covers, pistons, seals, seal supports and spring; remove the bleed nipple cover, nipple and ball.

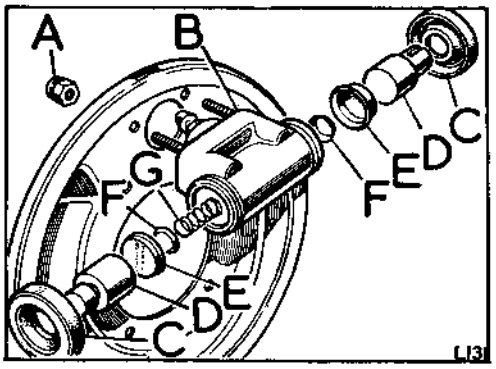


**Fig. H1-75. Wheel cylinder**

A—Fixings for wheel cylinder
B—Wheel cylinder
C—Dust cover
D—Piston
E—Seal
F—Support for seal
G—Spring

### Inspection

1. Clean all components in Girling cleaning fluid and allow to dry.
2. Examine the cylinder bore and pistons. Ensure that they are smooth to the touch with no corrosion, score marks or ridges. If there is any doubt, fit new replacements.
3. The seals and dust covers should be replaced with new components. These items are all included in the wheel cylinder overhaul kit.
4. Examine the brake drum for scoring, ovality and skim if required; standard diameter 10 in. (254 mm). Reclamation limit .030 in. (0,75 mm) oversize on standard diameter.
5. If the brake shoes require relining, refer to Operation H1-12.

## Operation H1-10—*continued*

**To assemble**

1. Smear the seals and all wheel cylinder internal parts with Castrol-Girling Brake and Clutch Fluid.
2. Fit the bleed ball and nipple. DO NOT over-tighten the bleed nipple; 4 to 6 lbs ft (0,55 to 0,8 mkg) torque is sufficient.
3. Assemble the wheel cylinder (see Fig. H1-75) ensuring that the seals are located with their flat back against the piston.

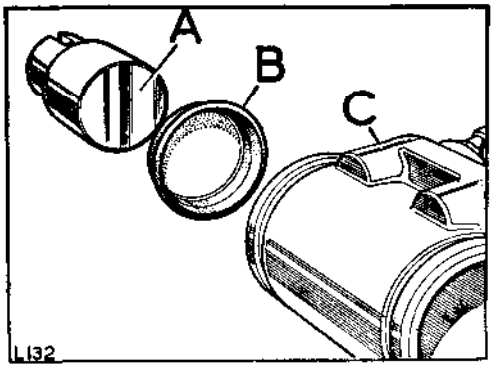


**Fig. H1-76. Seal location**

A—Piston
B—Seal
C—Wheel cylinder

4. Fit a rubber band around the cylinder to retain the parts, until the brake shoes are in position.
5. Refit the wheel cylinder to the anchor plate.
6. Reconnect the pull-off spring to the brake shoes and fit the shoes at the wheel cylinder end first.
7. Reconnect the leading shoe pull-off spring; replace it with its longest extremity hooked over the post on the shoe web.
8. Replace the trailing shoe anchor plate. See Fig. H1-74.
9. If the brake anchor plate has been removed from the vehicle, refit it together with the hub and brake drum (Operations E1-5 and F1-4) but do not fit the road wheel at this stage.
10. Adjust the brake. Operation H1-2.
11. Early 88 models—If the brake shoe steady posts have been disturbed, they should be reset as follows:

    Screw the posts well back, clear of the shoes. Apply the brakes lightly and turn the drum by hand to centralise the shoes; continue depressing the pedal until the shoes are hard on the drum. Screw in the steady posts until they just contact the shoe webs and secure by means of the locknuts.

    Later 88 models are fitted with anchor plates embodying a pressed projection in place of the shoe steady posts.

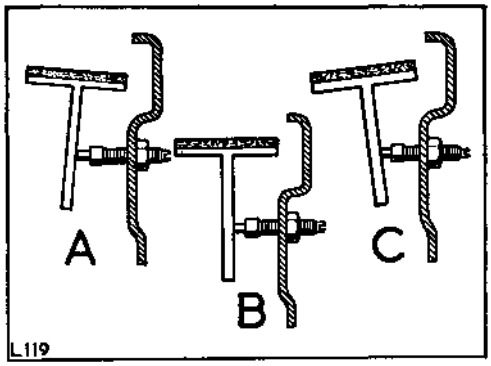


**Fig. H1-77. Steady post adjustment**

A—Incorrect
B—Correct
C—Incorrect

12. Replace the road wheel.
13. Lower the vehicle from the jack.
14. Bleed the brakes. Operation H1-1.

## Brake anchor plate, front, 11 in., 109 models, overhaul—Operation H1-10A

*(For removal and refitting instructions, Operation F1-4 refers)*
*(For brake shoe relining instructions, Operation H1-12 refers)*

Workshop hand tools:
Spanner sizes: $\frac{7}{16}$ in. BSF, $\frac{7}{16}$ in. AF, $\frac{1}{2}$ in. AF open end

### General

There are two types of 11 in. front brake in use; 4-cylinder engine vehicles are fitted with $2\frac{1}{4}$ in. (57 mm) wide brakes and 6-cylinder engine vehicles are fitted with 3 in. (76 mm) wide brakes. The following instructions cover both types.

### To dismantle

**Note:** It is not essential to remove the brake anchor plate from the vehicle. The brake shoe components are accessible after removing the road wheel and brake drum

1. Release brake shoes and pull-off springs by levering the trailing edge of each shoe away from the wheel cylinders.

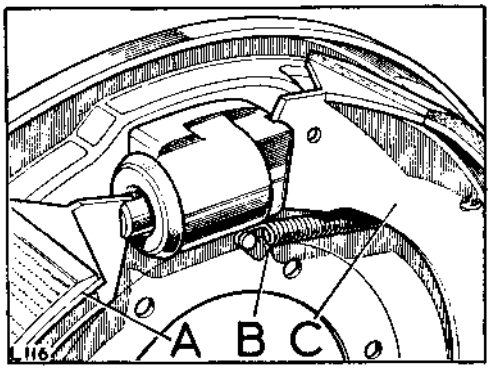


**Fig. H1-78. Brake shoe location**

A—Leading edge of shoe
B—Pull-off springs
C—Trailing edge of shoe

**Note:** If the wheel cylinders are not to be removed, e.g., when relining brake shoes, it is advisable to use a strong rubber band to retain the pistons in position and prevent loss of fluid and admission of air to the system.

2. Disconnect flexible pipe and connecting pipe from wheel cylinders. If the brake anchor plate is fitted to the vehicle, the flexible pipe MUST FIRST be disconnected at the chassis end. Also take precautions to prevent fluid spillage.

3. Unscrew securing nuts, then remove wheel cylinders from anchor plate and detach the rubber dust covers, pistons, seals, springs, and where applicable, the seal supports.

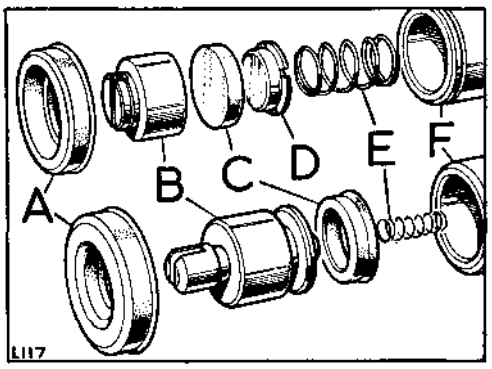


**Fig. H1-79. Wheel cylinder components, two types in use**

A—Dust cover
B—Piston
C—Seal for piston
D—Support for seal
E—Spring
F—Wheel cylinder

4. Remove the bleed nipple cover and unscrew the nipple.

5. Remove the brake anchor plate and steady posts if necessary.

### Inspection

1. Clean all components in Girling cleaning fluid and allow to dry.

2. Examine the cylinder bores and pistons. Ensure that they are smooth to the touch with no corrosion, score marks or ridges. If there is any doubt, fit new replacements.

3. The seals and dust covers should be replaced with new components. These items are included in the wheel cylinder overhaul kit.

4. Examine the brake drum for scoring, ovality and skim if required. Standard diameter: 11 in. + .004 in. (279,4 mm + 0,10 mm). Reclamation limit: .030 in. (0,75 mm) oversize on standard diameter.

## Operation H1-10A—*continued*

5. If the brake shoes require relining, refer to Operation H1-12.

**To assemble**

1. Smear the seals and all wheel cylinder internal parts with Castrol-Girling Brake and Clutch Fluid.
2. Fit the bleed nipple. DO NOT overtighten the nipple; 4 to 6 lbs ft (0,55 to 0,8 mkg) torque is sufficient.
3. Assemble the wheel cylinder (see Fig. H1-79) ensuring that the seals are located with their flat backs against the piston.

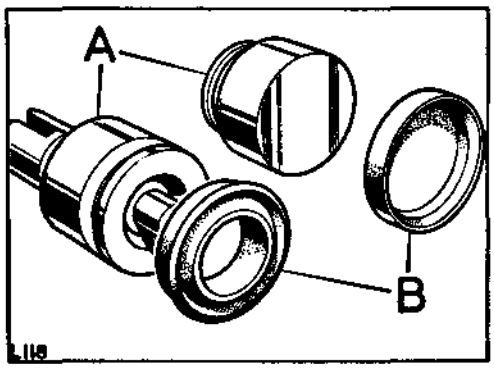


**Fig. H1-80. Seal location (two types in use)**

A—Piston
B—Seal

4. Fit a rubber band around the cylinder to retain the parts, until the brake shoes are in position.
5. Refit the wheel cylinders to the anchor plate.
6. Reconnect the pull-off springs to the brake shoes and fit the shoes at the wheel cylinder end first.
7. Fit the flexible pipe and connecting pipe to the wheel cylinders.
8. If the brake anchor plate has been removed from the vehicle, refit it together with the hub and drum (Operation E1-5) but do not fit the road wheel at this stage.
9. Adjust the brake. Operation H1-2.
10. If the brake shoe steady posts have been disturbed, they should be reset as follows:
Screw the posts well back, clear of the shoes. Apply the brakes lightly and turn the drum by hand to centralise the shoes; continue depressing the pedal until the shoes are hard on the drum. Screw in the steady posts until they just contact the shoe webs and secure by means of the locknuts.

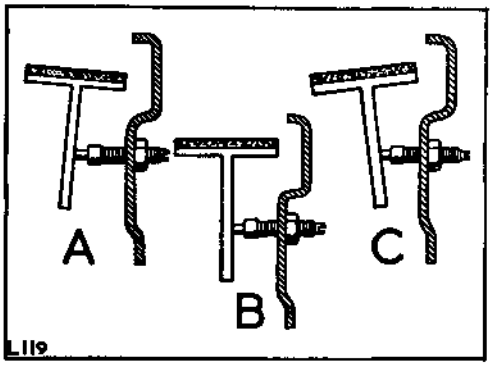


**Fig. H1-81. Steady post adjustment**

A—Incorrect
B—Correct
C—Incorrect

11. Replace the road wheel.
12. Lower the vehicle from the jack.
13. Bleed the brakes. Operation H1-1.

## Brake anchor plate, rear, 11 in., 109 models Series II, overhaul—Operation H1-10B

*(For removal and refitting instructions, Operation* E1-5 *refers)*
*(For brake shoe relining instructions, Operation* H1-12 *refers)*

Workshop hand tools:
Spanner sizes: $\frac{7}{16}$ in. AF, $\frac{1}{2}$ in. AF, $\frac{9}{16}$ in. AF open end
Screwdriver (medium)

### To dismantle

**Note:** It is not essential to remove the brake anchor plate from the vehicle; the brake shoe components are accessible after removing the road wheel and brake drum.

1. Release the brake shoes and pull-off springs by levering the shoes away from the wheel cylinder.

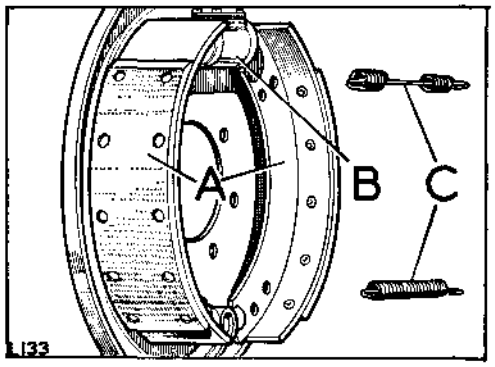


**Fig. H1-82. Brake shoe location**

A—Brake shoes
B—Wheel cylinder
C—Pull-off springs

**Note:** If the wheel cylinders are not to be removed, e.g., when relining brake shoes, it is adviseable to use a strong rubber band to retain the pistons in position and prevent loss of fluid and admission of air to the system.

2. Disconnect the flexible pipe from the wheel cylinder. If the brake anchor plate is fitted to the vehicle, the flexible pipe MUST FIRST be disconnected at the chassis end. Also take precautions to prevent fluid spillage.

3. Remove the securing nuts and withdraw the wheel cylinders from anchor plates, then detach the pistons, seals, air excluders and springs.

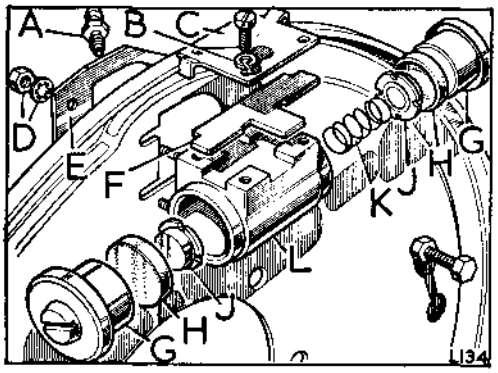


**Fig. H1-83. Wheel cylinder components**

A—Bleed nipple
B—Fixings for retainer
C—Retainer for abutment plate
D—Fixings for dust cover
E—Dust cover
F—Abutment plate for shoes
G—Piston
H—Seal for piston
J—Support for seal
K—Spring
L—Wheel cylinder

4. Remove the securing bolts and withdraw the adjuster assemblies complete with cover plates. Withdraw the plungers and unscrew the adjuster cones.

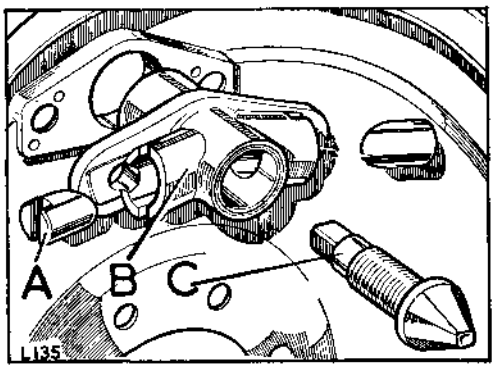


**Fig. H1-84. Brake shoe adjuster**

A—Plunger (LH and RH)
B—Adjuster housing
C—Cone for adjuster

## Operation H1-10B—*continued*

5. Unscrew the steady posts, with fibre bushes and locknuts.
6. Remove the bleed nipple cover and unscrew the nipple.

### Inspection

1. Clean all components in Girling cleaning fluid and allow to dry.
2. Examine the cylinder bore and pistons. Ensure that they are smooth to the touch with no corrosion, score marks or ridges. If there is any doubt, fit new replacements.
3. The seals and dust covers should be replaced with new components. These items are all included in the wheel cylinder overhaul kit.
4. Examine the brake drum for scoring, ovality, and skim if required. Standard diameter: 11 in. + .004 in. (279,4 mm + 0,10 mm). Reclamation limit: .030 in. (0,75 mm) oversize on standard diameter.
5. If the brake shoes require relining, Operation H1-12 refers.

### To assemble

1. Smear the seals and all wheel cylinder internal parts with Castrol-Girling Brake and Clutch Fluid.

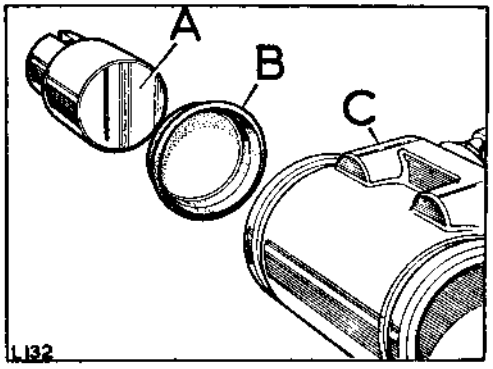


**Fig. H1-85. Seal location**

A—Piston
B—Seal
C—Wheel cylinder

2. Fit the bleed nipple. DO NOT overtighten the nipple; 4 to 6 lbs ft (0,55 to 0,8 mkg) torque is sufficient.
3. Assemble the wheel cylinder (see Fig. H1-83) ensuring that the seals are located with their flat backs against the piston.
4. Fit a rubber band around the cylinder to retain the parts, until the brake shoes are in position.
5. Refit the wheel cylinder to the anchor plate. Leave the wheel cylinder fixing nuts one turn slack so that the cylinder is free to float on the anchor plate.
6. Fit the flexible pipe to the wheel cylinder.
7. Lubricate the cone and adjuster plungers with graphite grease.
8. Ensure that the plungers are fitted in pairs. This can be checked by placing them end to end; in this position the slots should be parallel to each other.

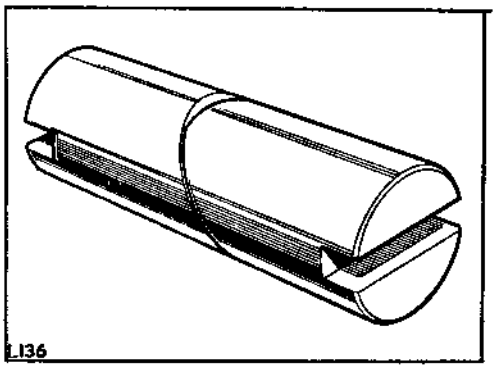


**Fig. H1-86. Plungers correctly paired**

9. Check that the plungers are fitted to the correct bore in adjuster housing. When the plungers are fitted correctly and forced down on the flats of the adjusting cone, the slot for brake shoe web will be in line with the slots in adjuster housing and the angle of the plunger slot will coincide with the angle of brake shoe web.

## Operation H1-10B—*continued*

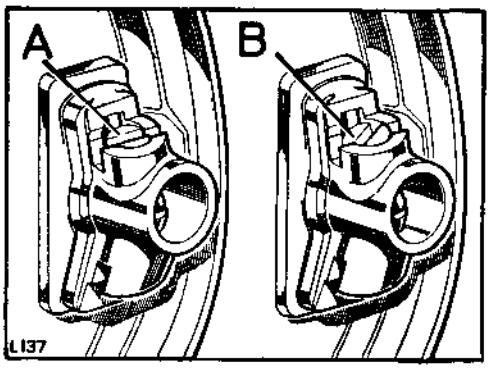


**Fig. H1-87. Plunger location**

A—Plungers correctly located
B—Plungers incorrectly located

10. Fit the adjuster assembly to the anchor plate. See Fig. H1-84.
11. Reconnect the pull-off springs to the brake shoes and fit the shoes at the wheel cylinder end first. The trailing shoe has the shorter lining and care must be taken to ensure it is not fitted in the leading position.
12 If the brake anchor plate has been removed from the vehicle, refit it together with the hub and drum (Operation F1-4) but do not fit the road wheel at this stage.
13. Adjust the brake. Operation H1-2.
14. If the brake shoe steady posts have been disturbed, they should be reset as follows:
Screw the posts well back clear of the shoes. Apply the brakes lightly and turn the drum by hand to centralise the shoes. Continue depressing the brake pedal until the shoes are hard on the drum. Screw in the steady posts until they just contact the shoe webs and secure by means of the locknuts.

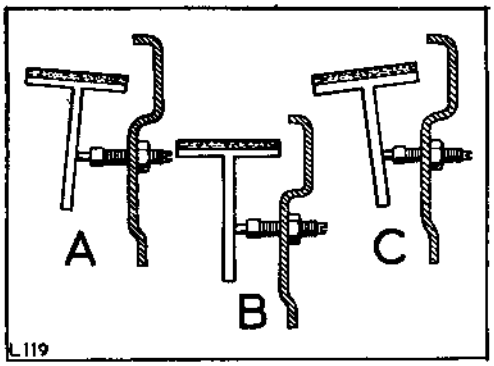


**Fig. H1-88. Steady post adjustment**

A—Incorrect
B—Correct
C—Incorrect

15. Replace the road wheel.
16. Lower the vehicle from the jack.
17. Bleed the brakes. Operation H1-1.

## Brake anchor plate, rear, 11 in., 109 models Series IIA, overhaul—Operation H1-10C

*(For removal and refitting instructions, Operation* E1-5 *refers)*
*(For brake shoe relining instructions, Operation* H1-12 *refers)*

Workshop hand tools:
Spanner sizes: $\frac{7}{16}$ in. AF, $\frac{1}{2}$ in. AF, $\frac{11}{16}$ in. AF open end

### To dismantle

**Note:** It is not essential to remove the brake anchor plate from the vehicle, the brake shoe components are accessible after removing the road wheel and brake drum.

1. Remove the brake shoes together from the pivot end first and part them by disconnecting the pull-off springs.

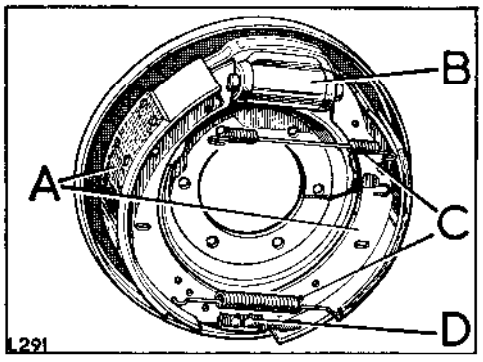


**Fig. H1-89. Fixings for brake shoes**

A—Brake shoes
B—Wheel cylinder
C—Pull-off spring
D—Pivot for shoes

**Note:** If the wheel cylinder is not to be removed, e.g., when relining the shoes, it is advisable to use a strong rubber band to retain the cylinder pistons to prevent loss of fluid and admission of air to the system.

2. Disconnect the flexible pipe from the wheel cylinder. If the brake anchor plate is fitted to the vehicle, the flexible pipe MUST FIRST be disconnected at the chassis end. Also take precautions to prevent fluid spillage.

3. Remove the wheel cylinder and detach the rubber dust covers, pistons, seals, seal supports and spring. Remove the bleed nipple cover, nipple and ball.

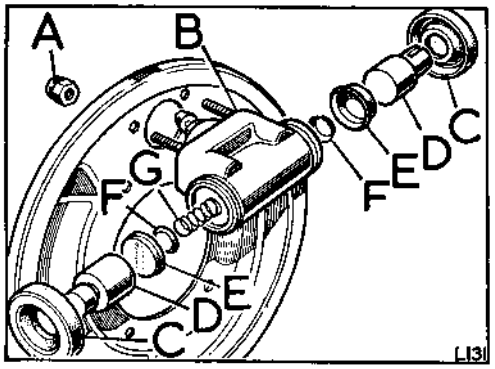


**Fig. H1-90. Wheel cylinder**

A—Fixing for wheel cylinder
B—Wheel cylinder
C—Dust cover
D—Piston
E—Seal
F—Support for seal
G—Spring

### Inspection

1. Clean all components in Girling cleaning fluid and allow to dry.

2. Examine the cylinder bore and pistons. Ensure that they are smooth to touch with no corrosion, score marks or ridges. If there is any doubt, fit new replacements.

3. The seals and dust covers should be replaced with new components. These items are all included in the wheel cylinder overhaul kit.

4. Examine the brake drum for scoring, ovality, and skim if required. Standard diameter: 11 in. + .004 in. (279,4 mm + 0,10 mm). Reclamation limit: .030 in. (0,75 mm) oversize on standard diameter.

5. If the brake shoes require relining, Operation H1-12 refers.

## Operation H1-10C—*continued*

**To assemble**

1. Smear the seals and all wheel cylinder internal parts with Castrol-Girling Brake and Clutch Fluid.

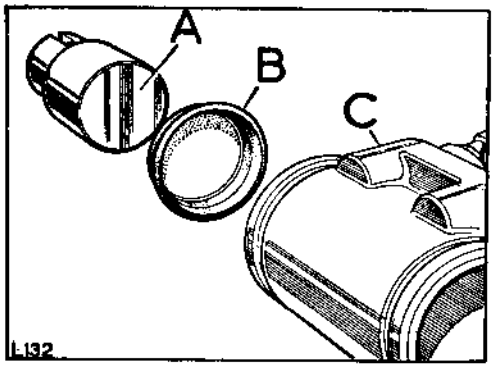


**Fig. H1-91. Seal location**

A—Piston
B—Seal
C—Wheel cylinder

2. Fit the bleed ball and nipple. DO NOT over-tighten the bleed nipple; 4 to 6 lbs ft (0,55 to 0,8 mkg) torque is sufficient.
3. Assemble the wheel cylinder (see Fig. H1-90) ensuring that the seals are located with their flat back against the piston.
4. Fit a rubber band around the cylinder to retain the parts, until the brake shoes are in position.
5. Refit the wheel cylinder to the anchor plate.
6. Reconnect the pull-off spring at the pivot end.
7. Fit brake shoes in position. Fit the pull-off spring at the cylinder end and position the brake shoes at the pivot end and in the wheel cylinder pistons.
8. If the brake anchor plate has been removed from the vehicle, refit it together with the hub and brake drum (Operation F1-4) but do not fit the road wheel at this stage.
9. Adjust the brake. Operation H1-2.
10. Fit the road wheel and lower the vehicle from the jack.
11. Bleed the brakes. Operation H1-1.

## Transmission brake, overhaul—Operation H1-11

*(For removal and refitting instructions, Operation C1-4 refers)*
*(For brake shoe relining instructions, Operation H1-12 refers)*

Workshop hand tools:
Spanner sizes: $\frac{1}{4}$ in. Whit, $\frac{7}{16}$ in. AF open end
Girling brake adjusting spanner

### To dismantle

**Note:** It is not essential to remove the transmission brake from the vehicle, the brake shoe components are accessible after removing the brake drum, which can be detached from the gearbox output flange and pushed back over the propeller shaft.

1. Remove the brake shoes together with the pull-off springs, separate the shoes by detaching the springs.

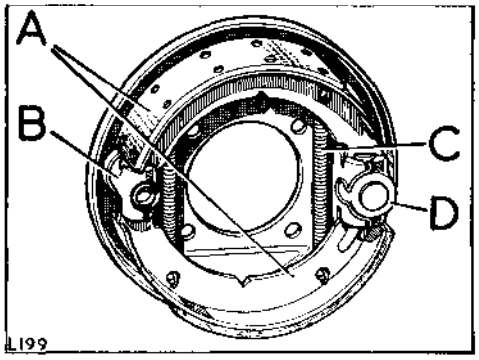


**Fig. H1-92. Brake shoe location**

A—Brake shoes
B—Adjuster unit
C—Brake shoe pull-off springs
D—Expander unit

2. **Early type.** Remove the clevis, return spring, spring anchor and rubber dust cover from the expander rod and remove the expander housing complete. If necessary, remove the split pins from the expander housing, thus releasing the plungers, steel balls and expander cone; detach the expander rod from the cone.

3. **Late type.** Withdraw the rubber dust excluder and remove the clip securing the expander housing to the anchor plate. Withdraw the expander assembly. If necessary remove the spring clip and withdraw the plungers, steel rollers and operating rod.

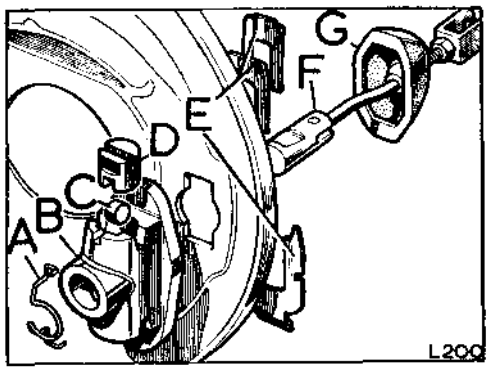


**Fig. H1-93. Expander unit**

A—Spring clip
B—Housing
C—Roller
D—Plunger
E—Fixings for expander unit
F—Operating rod
G—Rubber dust excluder

4. Remove the adjuster housing; pull out the plungers and unscrew the adjuster cone from the housing.

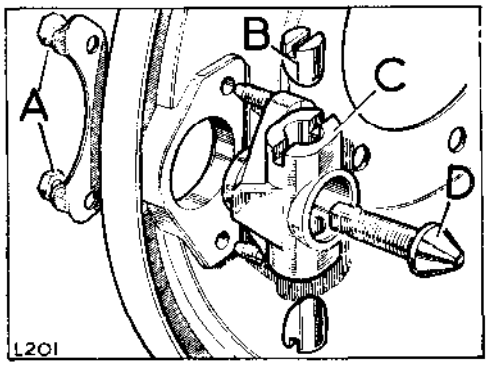


**Fig. H1-94. Adjuster unit**

A—Fixings for adjuster housing
B—Plungers
C—Housing
D—Adjuster cone

## Operation H1-11—*continued*

### Inspection

1. Clean all components in Girling cleaning fluid and allow to dry.
2. Examine all items for obvious signs of wear and replace with new components as necessary. The rollers, plungers and expander are particularly important.
3. Examine the brake drum for scoring, ovality, and skim if required. Standard diameter: 9 in. (228,6 mm). Reclamation limit: .030 in. (0,75 mm) oversize on diameter.
4. If there is any sign of oil contamination on the brake linings, check, and if necessary, replace the output shaft oil seal fitted in the speedometer drive housing. Operation C1-6.
5. If the brake shoes require relining, Operation H1-12 refers.

### To assemble

1. Replace the adjuster housing, leaving the securing bolts slack at this stage; screw in the adjuster cone, leaving it in the fully 'off' position.
2. Grease the adjuster plungers and replace them in the housings.

**Early type** (items 3 to 5)

3. It is essential that the adjuster plungers be replaced in the correct bores of the housing. They are handed, due to the fact that in addition to the adjustment flats being at an angle of 30° when viewed vertically, they are also inclined at an angle of 15° to the plunger axes, owing to the housing bores being similarly inclined. When dismantled the plungers are not readily distinguished, and care must be taken to ensure that handed pairs are fitted.

   A quick method of selecting pairs is illustrated. The plungers should be placed end to end with the flats mated exactly, when a correct pair will show the brake shoe slots parallel with each other. If the slots are not in line, both plungers are of the same hand, but this test gives no indication as to which hand, right or left.

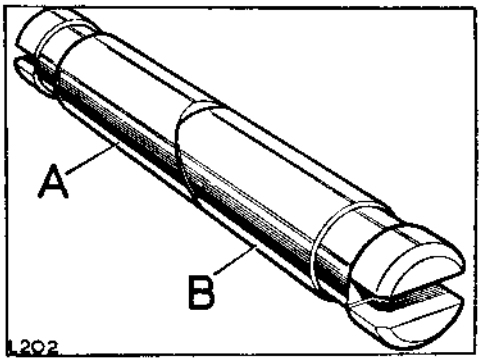


**Fig. H1-95. Early type plungers**

A—Left-hand plunger
B—Right-hand lunger

4. Having made certain that a correct pair has been chosen, it will still be necessary to make sure that they are fitted in the proper bores, as illustrated, i.e., with the flats of the adjuster cone and plungers face to face; the slots in the ends of the plungers must be in line and vertical (parallel with the anchor plate). In this case, four distinct 'clicks' will be felt for each revolution of the adjuster cone.

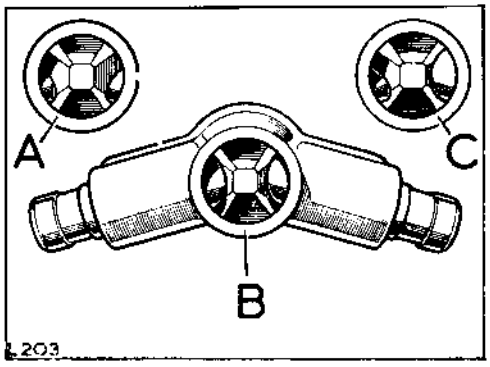


**Fig. H1-96. Plunger location**

A—Correct pair of plungers in incorrect bore
B—Plungers in correct bores
C—Two right-hand plungers in the housing

## Operation H1-11—*continued*

5. When assembled wrongly, the brake shoes will force the plunger slots into a vertical position, throwing the plunger flat off the flat of the adjuster cone, pushing the plunger approximately $\frac{1}{16}$ in. (1,5 mm) out of the housing and so upsetting the centralisation of the shoes.

   It is possible to erect the units incorrectly in three ways:

   (a) RH plunger in LH bore and LH plunger in RH bore.

   In this case it is likely that no 'click' will be felt when adjusting the brake.

   (b) Two LH plungers in the housing.

   (c) Two RH plungers in the housing.

   In both these cases the correct plunger will 'click' on adjustment, thus giving the erroneous impression that the assembly is in order.

**Latest type**

6. The two plungers are identical and can be fitted in either bore. Align the tapered ends of the plungers with the cone.

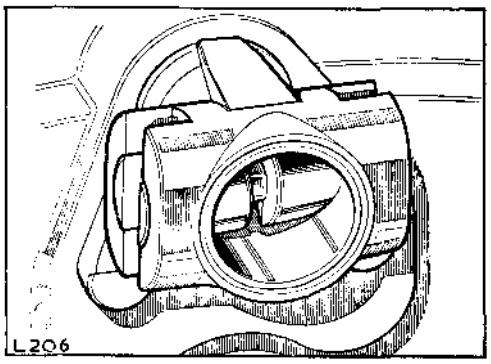


**Fig. H1-97. Plungers in housing**

**Early type** (items 7 to 9)

7. Grease and replace the expander plungers, steel rollers and expander cone in the housing and locate with split pins.

8. Reconnect the expander rod to the cone and fit the complete housing to the brake anchor plate, leaving the Simmonds securing nuts one turn slack. Ensure that the housing is free to float on the anchor plate.

9. Replace the rubber dust cover, spring anchor plate, return spring and clevis on the expander rod.

**Late type** (items 10 and 11)

10. Grease and replace the plungers, steel rollers and operating rod in the expander housing.

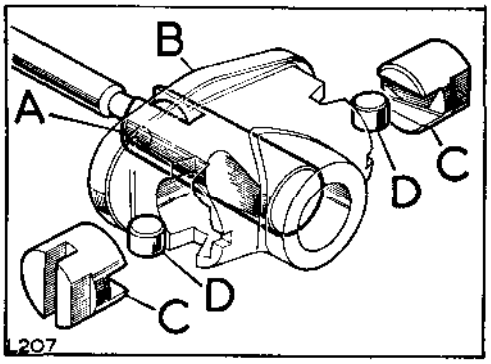


**Fig. H1-98. Expander assembly**

A—Operating rod
B—Housing
C—Plunger
D—Roller

11. Refit the housing to the anchor plate with the spring clip fitted as illustrated. Fit the packing piece, locking plate and retaining spring in the order illustrated, then fit the rubber dust excluder.

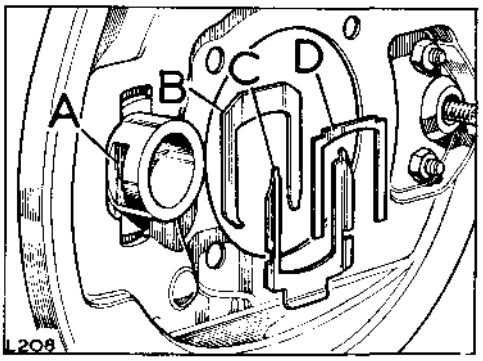


**Fig. H1-99. Fixings for expander housing**

A—Expander housing
B—Packing piece
C—Locking plate
D—Retaining spring

## Operation H1-11—*continued*

12. Refit the brake shoes and pull-off springs together; **Early type**—the half-round slots in the shoe webs should be fitted to the adjuster housing. **Late type**—the fully lined end of the lower shoe must be fitted to the expander housing; the fully lined end of the upper shoe must be fitted to the adjuster housing.

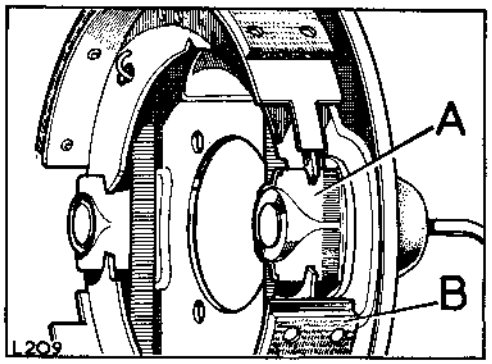


**Fig. H1-100. Brake shoe location**

A—Expander housing
B—Fully lined ends of brake shoes

13. If the brake anchor plate has been removed from the vehicle, refit it together with the brake drum and propeller shaft. Operation C1-4.

14. Reconnect the expander rod to the hand brake bell-crank lever.

15. To ensure correct clearance between the brake shoes and drum, turn the adjuster cone until the brake shoes are locked tightly against the drum; tighten the set bolts securing the adjuster housing (these were left slack on assembly) and slacken off the cone two clicks; give the brake a firm application to ensure that the shoes have centralised at the expander end. The brake drum should now be free to rotate.

16. Set the hand brake linkage at the vertical adjuster rod, so that the hand brake has one or two clicks free movement in the 'off' position.

17. Refill the transfer box with oil, 4½ pints (2,5 litres).

## Brake shoes, re-line—Operation H1-12

*(For removal and refitting instructions, Operations* H1-10, 10A, 10B, 10C *and* H1-11 *refer)*

Workshop hand tools:
Hammer, chisel (small), pin punch, riveting tools

**To reline**

1. Remove the old linings from the shoes by shearing the rivets.

   **Note:** Brake shoes fitted with bonded linings: If the shoes incorporate rivet holes, the bonded linings can be removed and rivetted linings can be fitted in their place. If the shoes are not pre-drilled, replacement shoe and lining assemblies must be fitted.

   **Important:** Use the correct type new linings as detailed in the Parts Catalogue.

2. Attach the new linings to the shoes, commencing at the centre and working outwards, but only peen the rivets sufficient to locate the linings. Then with all the rivets loosely fitted, fully secure, commencing from the centre again.

3. Chamfer both ends of each lining.

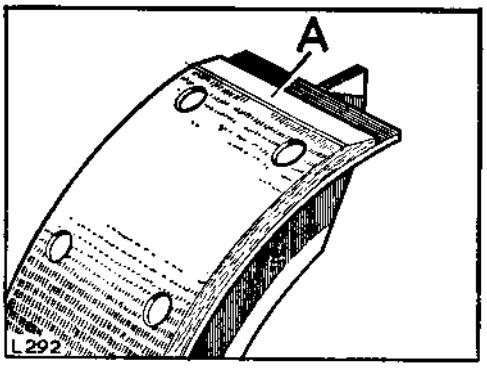


**Fig. H1-101. Chamfering brake lining**

A—Chamfer

## Hand brake lever and linkage, remove and refit—Operation H1-13

Workshop hand tools:
Spanner sizes: $\frac{1}{2}$ in. AF, $\frac{9}{16}$ in. AF open end
Pliers

### To remove

**Caution:** Before commencing work on the hand brake mechanism, chock the road wheels to prevent the vehicle moving.

**Early type—up to vehicle suffix 'C'**

**RHStg models**

1. Remove the centre inspection panel from the seat box.
2. Disconnect the transmission brake expander rod and vertical adjuster rod from the bell-crank lever.
3. Remove the hand brake assembly complete from the vehicle, withdrawing the lever grip carefully through the rubber draught excluder in the front of the seat box.
4. Remove the adjuster rod from the adjuster pin; remove the adjuster pin, thus releasing the brake catch and locating plate.
5. Remove the locating plate.
6. Remove the lever from the ratchet plate.
7. Remove the brake catch from the plunger rod and unscrew the plunger, plunger rod and spring from the brake lever.
8. Remove the bell-crank and spindle complete from the chassis.
9. Remove the bell-crank lever from the spindle.
10. If necessary, press the bush out of the lever.

**LHStg models**

1. Remove the centre panel from seat box.
2. Disconnect the transmission brake expander rod and vertical adjuster rod from the bell crank lever.
3. Remove the hand brake and cross-shaft complete.
4. Remove the split housing from the cross-shaft support brackets; remove the felt dust seals and self-lubricating bushes supporting the hand brake cross-shaft.
5. Strip the unit as described for RHStg models.
6. Remove the bell crank lever.

### To assemble

1. Reverse the sequence of operations detailed for stripping.
2. Renew the bell crank lever bush and spindle if required.
3. LHStg models—The bushes should be greased prior to assembly and new felt seals fitted as required.
4. Set the adjuster rod by means of the locknuts at the adjuster pin, so that the hand brake lever has two ratchet clicks free movement in the 'off' position.

**Latest type, from vehicle suffix 'D' onwards**

(See Figs. H1-106 and H1-107)

1. From under the vehicle, disconnect the hand brake expander rod from the relay lever.

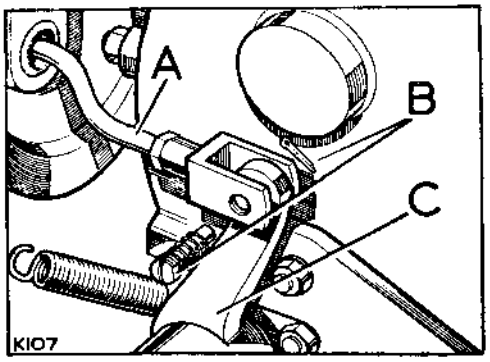


**Fig. H1-102. Expander rod**

A—Expander rod
B—Fixing, expander rod to relay lever
C—Relay lever

2. Remove the relay lever fixings.
3. LHStg models—Remove the fixings between the hand brake cross-shaft and the RH chassis member.

## Operation H1-13—*continued*

4. Remove the two nuts and spring washers securing the hand brake lever to the chassis.

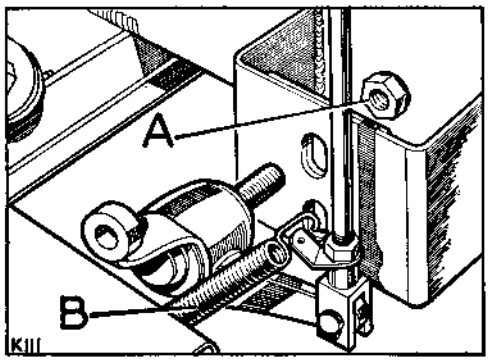


**Fig. H1-103. Relay lever fixings**

A—Fixings, relay mechanism to chassis
B—Return spring, transmission brake

5. Remove the hand brake assembly complete from the vehicle, withdrawing the lever grip carefully through the rubber draught excluder in the front of the seat box.

   LHStg models—To facilitate removal, release the hand brake lever to ratchet fixings and withdraw the cross-shaft and lever separately.

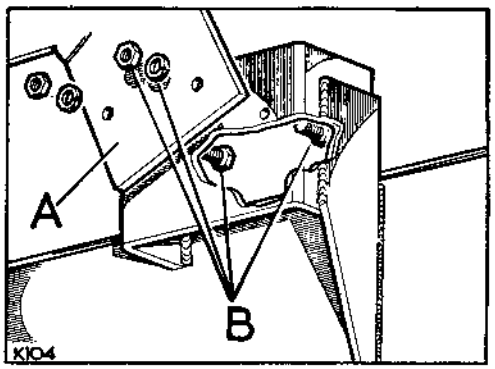


**Fig. H1-104. Hand brake lever fixings**

A—Mounting bracket for hand brake lever
B—Fixings, hand brake lever to chassis

6. LHStg models—If required, remove the split housing from the cross-shaft support brackets; remove the felt dust seals and self-lubricating bushes supporting the hand brake cross-shaft.

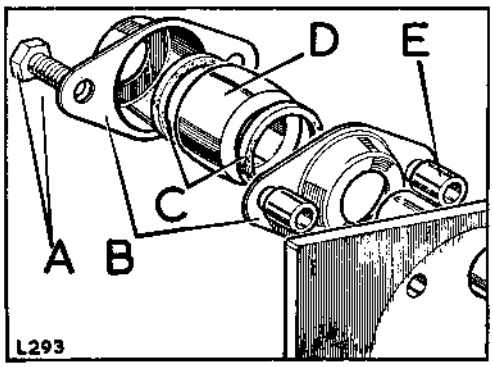


**Fig. H1-105. Cross-shaft bearings**

A—Fixings for bearing housing
B—Housing for bearing
C—Seal
D—Bearing
E—Distance piece

7. Remove the brake catch pin, catch and distance pieces.
8. RHStg models—Remove the fulcrum pin, ratchet fixings and ratchet from the hand brake lever.
9. Unscrew the plunger and withdraw the spring, washer and the plunger rods.
10. If required, remove the relay lever and spindle. If necessary, press the bush from the lever.

**To assemble** (See Figs. H1-106 and H1-107)

1. If removed, fit the bush to the relay lever and fit the relay lever and spindle to the chassis.

   **Note:** The bore size of a new relay lever bush is .7515 in. —.001 in. (19,088 mm —0,0254 mm)

2. Fit the plunger rods, washer, spring and plunger to the hand brake lever.

## Operation H1-13—*continued*

3. Fit the ratchet and brake catch to the lever, ensuring that the brake catch engages the plunger rod.
   RHStg models—Also fit the pin for the adjuster rod.
4. RHStg models—Fit the hand brake lever to the chassis. See Fig. H1-104.
5. LHStg models—Thoroughly smear the cross-shaft bearings with general purpose grease, assemble the bearings, using new seals, to the support plates. Locate the hand brake lever, cross-shaft and support plate in position. Secure the support plates to the chassis and the cross-shaft to the lever.
6. Connect the adjuster and expander rods to the relay lever. Reconnect the return spring. See Fig. H1-102.
7. Set the hand brake linkage at the vertical adjuster rod, so that the hand brake has one or two clicks free movement in the 'off' position.

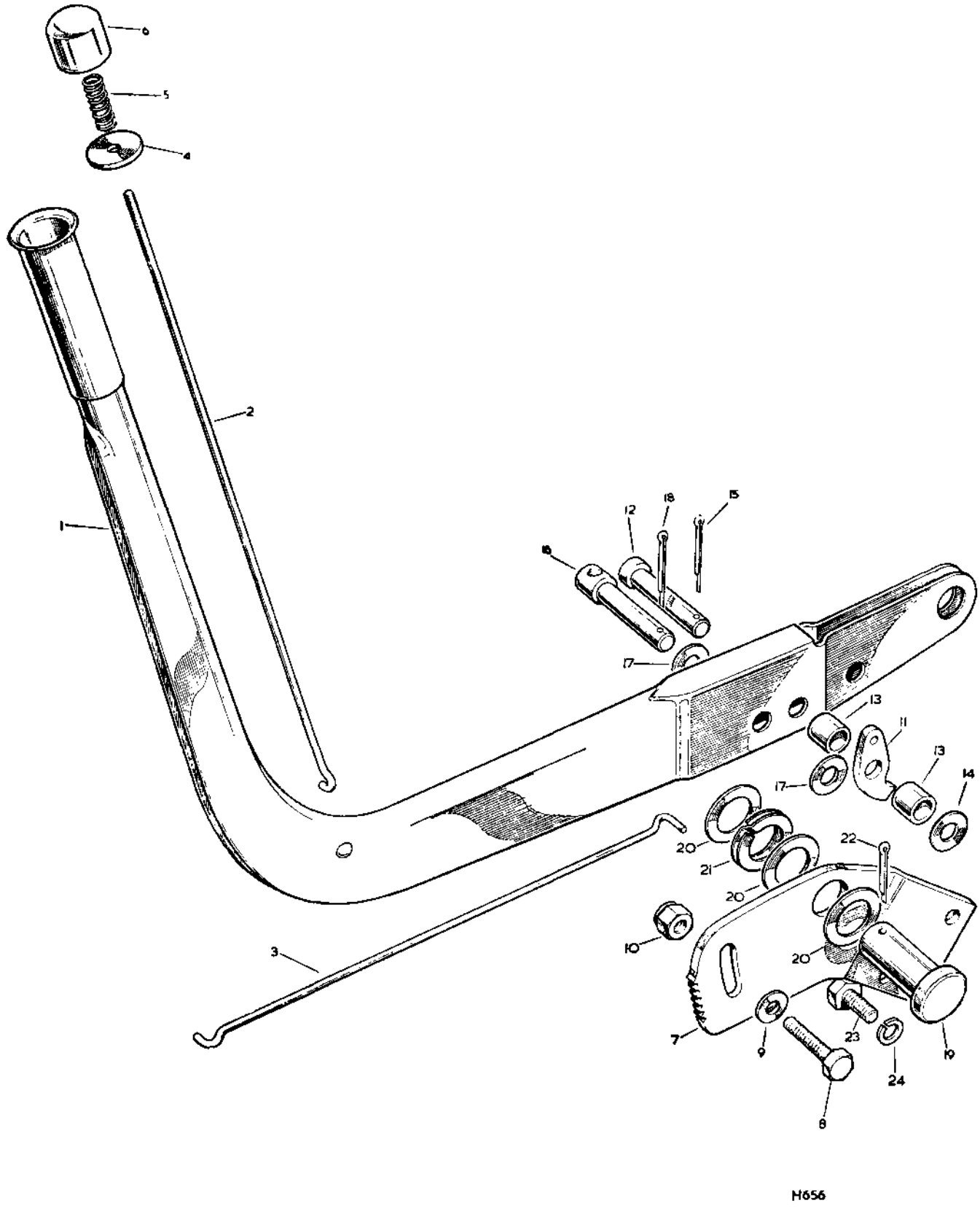


Fig. H1-106. Hand brake lever, RHStg. From vehicle suffix 'D' onwards

**Key to illustration of hand brake lever, RHStg**

1 Hand brake lever
2 Plunger rod, upper
3 Plunger rod, lower
4 Washer for plunger spring
5 Spring for plunger rod
6 Plunger
7 Ratchet for hand brake
8 Bolt ($\frac{3}{8}$ in. UNF x $1\frac{1}{4}$ in. long) } Fixing lever to ratchet
9 Plain washer
10 Self-locking nut ($\frac{3}{8}$ in. UNF)
11 Brake catch
12 Pin } Fixing catch
13 Distance piece
14 Plain washer
15 Split pin
16 Pin for hand brake adjuster rod
17 Plain washer } Fixing pin to hand brake lever
18 Split pin
19 Fulcrum pin for hand brake lever
20 Plain washer } Fixing pin to ratchet and lever
21 Spring washer
22 Split pin
23 Bolt ($\frac{3}{8}$ in. UNF x $\frac{7}{8}$ in. long) } Fixing hand brake lever to chassis frame
24 Spring washer
Nut ($\frac{3}{8}$ in. UNF)

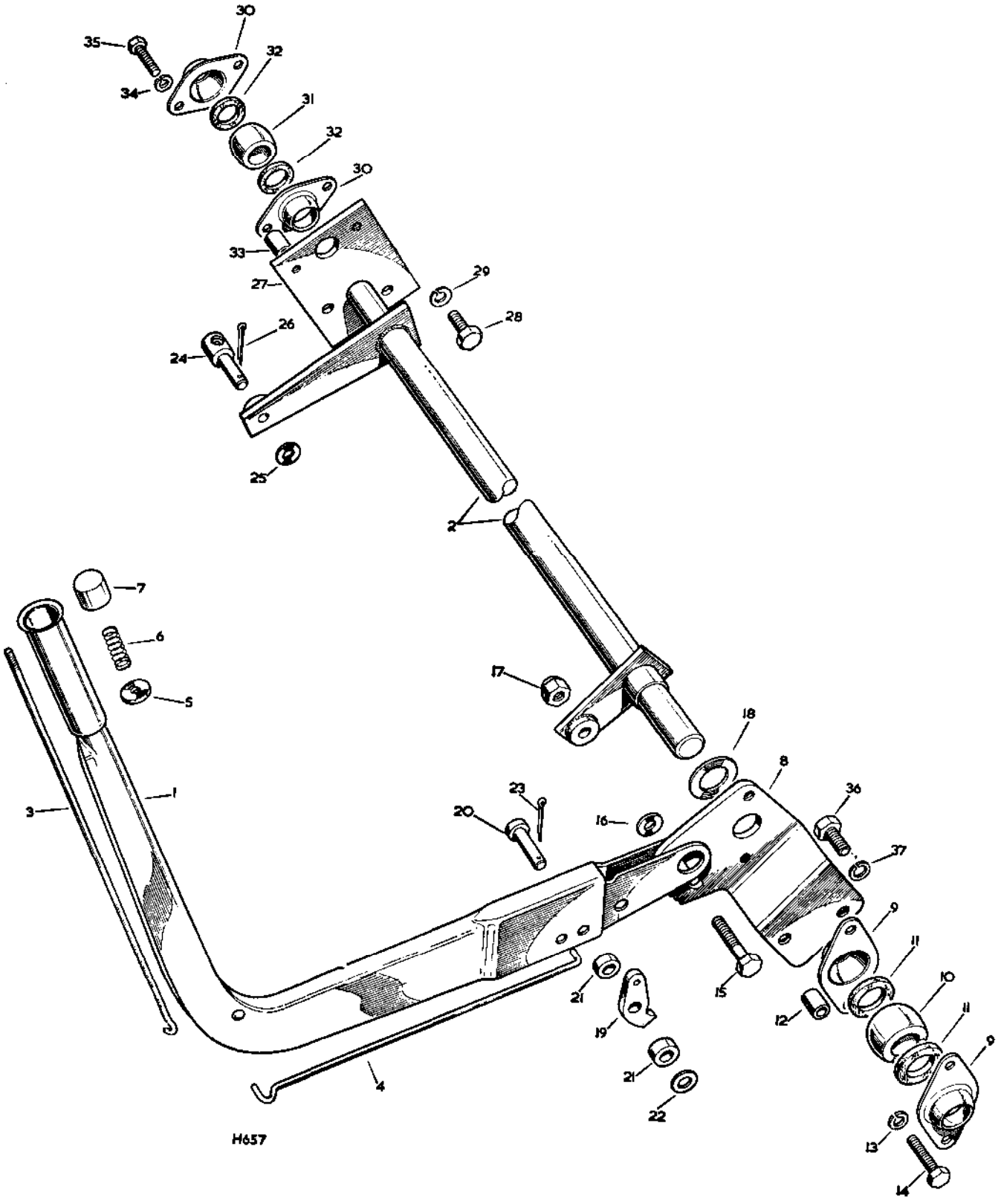


Fig. H1-107. Hand brake lever, LHStg. From vehicle suffix 'D' onwards

**Key to illustration of hand brake lever, LHStg**

1 Hand brake lever
2 Cross-shaft for hand brake
3 Plunger rod, upper
4 Plunger rod, lower
5 Washer for plunger spring
6 Spring for plunger rod
7 Plunger
8 Ratchet for hand brake
9 Housing for cross-shaft bearing
10 Spherical bearing for cross-shaft
11 Felt ring for bearing
12 Distance piece
13 Spring washer
14 Set bolt ($\frac{5}{16}$ in. UNF x $1\frac{1}{8}$ in. long)
} Fixing bearing and housing to ratchet
15 Bolt ($\frac{3}{8}$ in. UNF x $1\frac{3}{4}$ in. long)
16 Plain washer
17 Self-locking nut ($\frac{3}{8}$ in. UNF)
} Fixing lever to ratchet
18 Plain washer between lever and ratchet
19 Brake catch
20 Pin
21 Distance piece
22 Plain washer
23 Split pin
} Fixing catch to lever
24 Pin for hand brake adjuster rod
25 Plain washer
26 Split pin
} Fixing pin to cross-shaft lever
27 Support plate for hand brake bearing housing
28 Bolt ($\frac{3}{8}$ in. UNF x $\frac{7}{8}$ in. long)
29 Spring washer
Nut ($\frac{3}{8}$ in. UNF)
} Fixing support plate to chassis frame
30 Housing for cross-shaft bearing
31 Spherical bearing for cross-shaft
32 Felt ring for bearing
33 Distance piece
34 Spring washer
35 Set bolt ($\frac{5}{16}$ in. BSF x $\frac{7}{8}$ in. long)
} Fixing housing and bearing to support plate
36 Bolt ($\frac{3}{8}$ in. UNF x $\frac{7}{8}$ in. long)
37 Spring washer
Nut ($\frac{3}{8}$ in. UNF)
} Fixing hand brake lever to chassis frame

## Servo unit (Clayton Dewandre hydraulic Type,) remove and refit—Operation H1-14

*(For overhaul instructions, Operation* H1-15 *refers)*
*(For removal and refitting instructions for the Girling mechanical type servo unit, Operation* H1-14A *refers)*

Workshop hand tools
Spanner sizes: $\frac{7}{16}$ in. AF, $\frac{1}{2}$ in. AF, $\frac{13}{16}$ in. AF open end
Screwdriver (medium)

### General

Servo assisted brakes are standard on certain models, but are optional on others. When fitted, the servo unit is located in the engine compartment, but the actual position varies with different models.

### To remove

1. Disconnect the fluid outlet pipe from the servo unit.
2. Disconnect the fluid inlet pipe from the servo unit. Then depress the brake pedal and wedge it in that position to prevent further leakage of brake fluid. When depressing the brake pedal, take precautions to avoid fluid spillage.

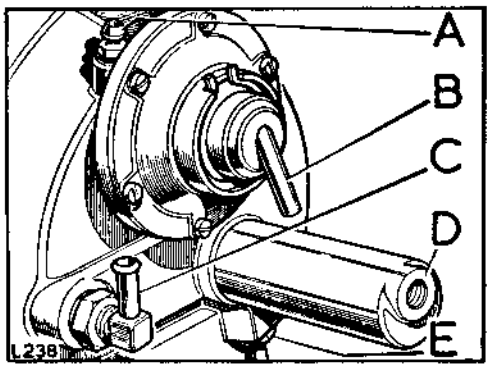


**Fig. H1-108. Servo unit pipe connections**

A—Bleed nipple
B—Air inlet (from atmosphere)
C—Vacuum hose connection
D—Fluid outlet pipe connection
E—Fluid inlet pipe connection

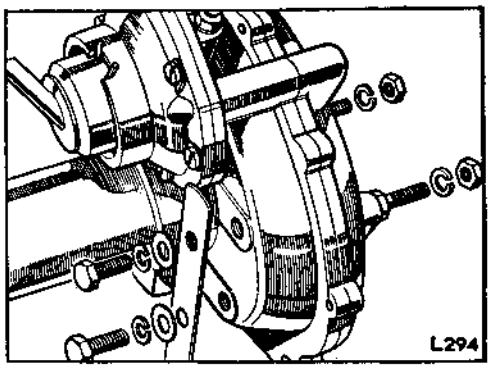


**Fig. H1-109. Fixings for servo unit**

3. Disconnect the vacuum hose from the servo unit.
4. Remove the fixings and withdraw the servo unit complete.

### To refit

1. Locate the servo unit in position, bleed nipple uppermost, and secure the fixings.
2. Connect the fluid inlet and outlet pipes to the servo unit.
3. Connect the vacuum hose to the servo unit and secure the hose clip.
4. Bleed the complete brake system. Operation H1-1

## Servo unit (Girling mechanical type), remove and refit—Operation H1-14A

*(For overhaul instructions, Operation* H1-15A *refers)*
*(For removal and refitting instructions for the Clayton Dewandre hydraulic type servo unit, Operation* H1-14 *refers)*

Workshop hand tools:
Spanner sizes: $\frac{1}{2}$ in. AF, $\frac{9}{16}$ in. AF
Pliers (long-nosed)

### To remove

1. Remove the brake master cylinder. Operation H1-5A.
2. Disconnect the electrical lead from the switch fitted to the pedal bracket.
3. Disconnect the vacuum pipe from the servo unit.

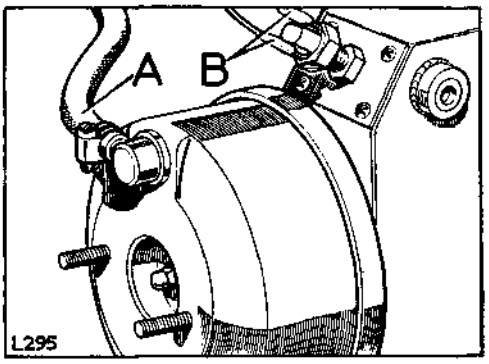


**Fig. H1-110. Electrical and vacuum connections**

A—Vacuum pipe from servo
B—Electrical lead from brake switch

4. Remove the fixings securing the brake pedal bracket to the toe box.

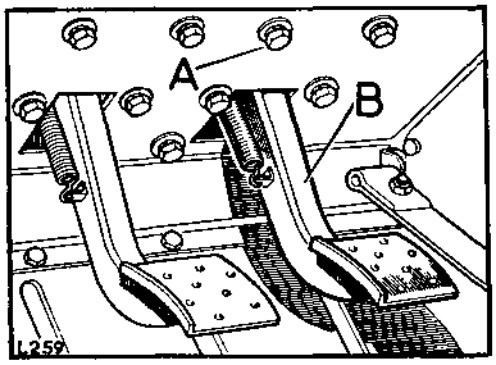


**Fig. H1-111. Fixings for brake pedal bracket**

A—Fixings (6 off)
B—Brake pedal

5. Carefully withdraw the brake pedal and bracket assembly from the engine compartment, manoeuvring the pedal through the aperture in the toe box.
6. Remove the split pin and pivot pin from the brake pedal to servo coupling.

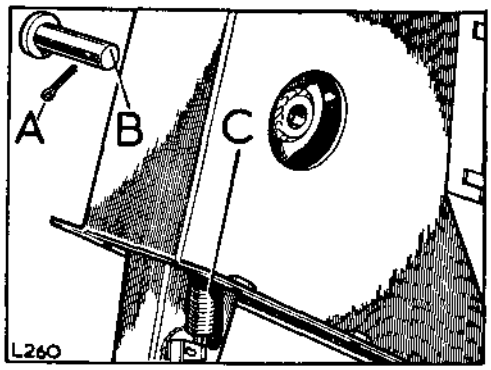


**Fig. H1-112. Pedal to servo coupling**

A—Split pin, securing pivot
B—Pivot pin for coupling to servo
C—Return springs for brake pedal

7. Remove the fixings and withdraw the servo unit complete from the pedal bracket.

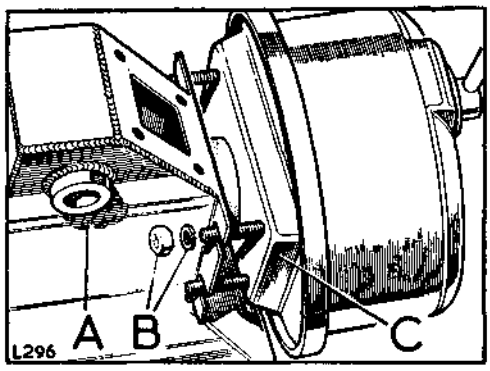


**Fig. H1-113. Fixings for servo unit**

A—Bracket for brake pedal
B—Fixings for servo unit
C—Servo unit

## Operation H1-14A—*continued*

**To refit**

1. Secure the servo unit to the brake pedal bracket, with the vacuum connection uppermost.
2. Using a new split pin, fit the coupling pin between the pedal and servo unit.
3. Apply a waterproof sealant between the joint flanges of the pedal bracket and the toe box. A suitable sealant is 'Sealastrip', manufactured by Expandite Ltd, Chase Road, London NW10.
4. Carefully locate the brake pedal and bracket assembly in position on the toe box, manoeuvring the pedal through the aperture in the toe box, and secure in position.
5. Connect the vacuum pipe to the servo unit, and the electrical lead to the brake pedal switch.
6. Fit the brake master cylinder. Operation H1-5A. Tighten the master cylinder securing nuts to a torque figure of 16 to 19 lbs ft (2,2 to 2,6 mkg).
7. Bleed the complete braking system. Operation H1-1.

## Servo unit (Clayton Dewandre hydraulic type), overhaul—Operation H1-15

*(For removal and refitting instructions, Operation* H1-14 *refers)*

Workshop hand tools:
Spanner sizes: $\frac{7}{16}$ in. AF, $\frac{15}{16}$ in. AF, $1\frac{1}{4}$ in. AF open end
Screwdriver, Pliers

### To dismantle

1. Remove the circlip securing the air cleaner and withdraw the cleaner, joint washer, spring and poppet valve.

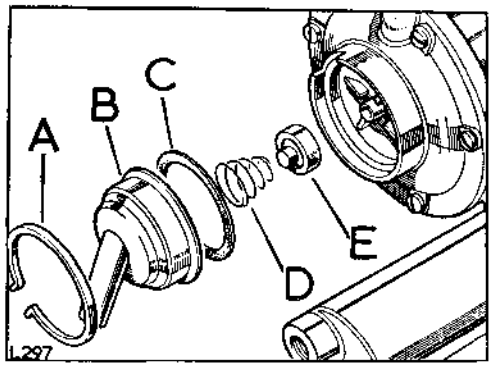


**Fig. H1-114. Air cleaner and poppet valve**

A—Circlip
B—Air cleaner
C—Joint washer for breather
D—Spring for poppet valve
E—Poppet valve

2. Remove the cover and joint washer from the reaction diaphragm housing and withdraw the spring and the diaphragm assembly.

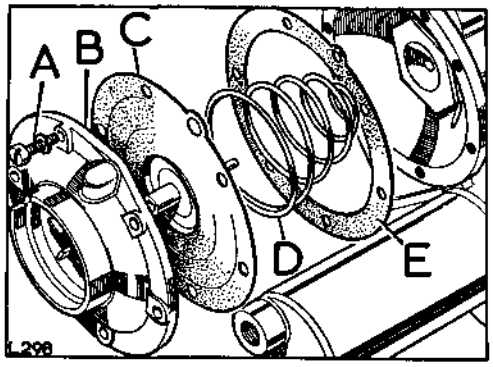


**Fig. H1-115. Reaction diaphragm**

A—Fixings for cover
B—Cover for reaction diaphragm
C—Reaction diaphragm assembly
D—Spring
E—Joint washer for cover

3. Unscrew the housing for the hydraulic plunger and withdraw the plunger complete with seals. Remove the plunger seals and the 'O' ring from the housing.

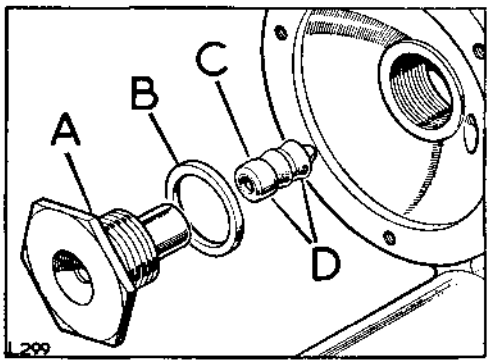


**Fig. H1-116. Hydraulic plunger**

A—Housing for plunger
B—'O' ring seal for housing
C—Hydraulic plunger
D—Seals for plunger

4. Remove the elbow union and joint washer, and withdraw the spring guide, spring and non-return valve.

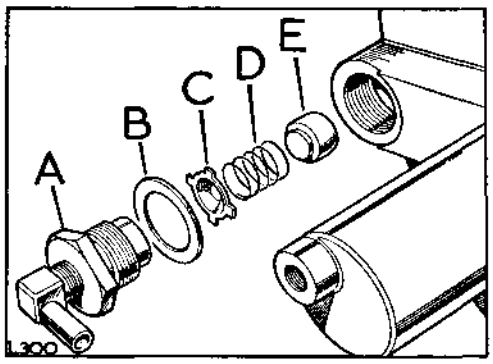


**Fig. H1-117. Non-return valve**

A—Elbow union
B—Joint washer
C—Spring guide
D—Spring
E—Non-return valve

## Operation H1-15—*continued*

5. Remove the vacuum chamber cover, taking care to retain the connector tube located between the rim of the cover and chamber.

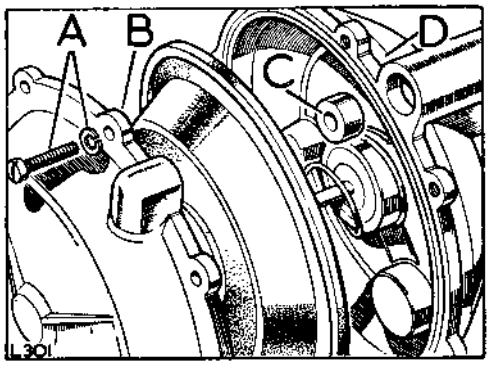


**Fig. H1-118. Cover for vacuum chamber**

A—Fixings for cover
B—Cover
C—Connector tube
D—Vacuum chamber

6. Withdraw the diaphragm assembly and spring.

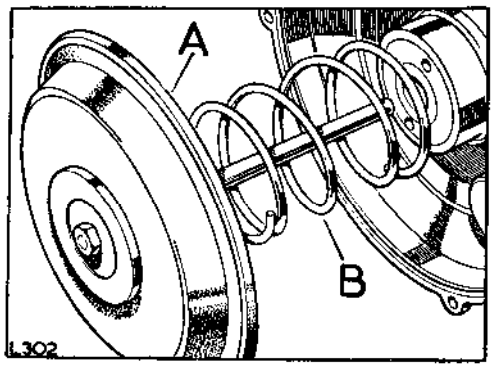


**Fig. H1-119. Power diaphragm**

A—Diaphragm assembly
B—Spring

7. Using the extractor holes provided, unscrew the push rod housing and withdraw the spring, retaining ring, seal retainer, seal and backing washer.

8. Press the oil seal from the push rod housing

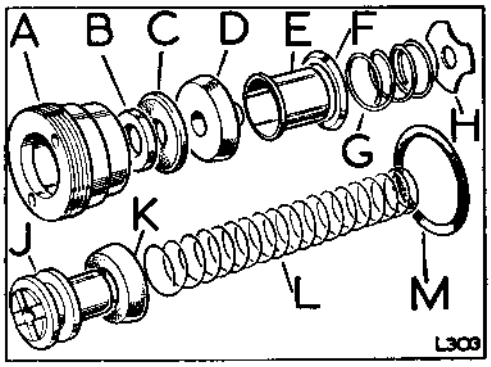


**Fig. H1-120. Push rod housing and hydraulic piston**

A—Push rod housing
B—Seal for housing
C—Backing washer for seal
D—Seal for push rod
E—Seal retainer
F—Retaining ring for seal
G—Spring, retaining seal
H—Guide washer for push rod
J—Hydraulic piston
K—Seal for piston
L—Spring for hydraulic piston
M—'O' ring seal for cylinder

9. Withdraw the guide washer, hydraulic piston, spring and 'O' ring from the cylinder.

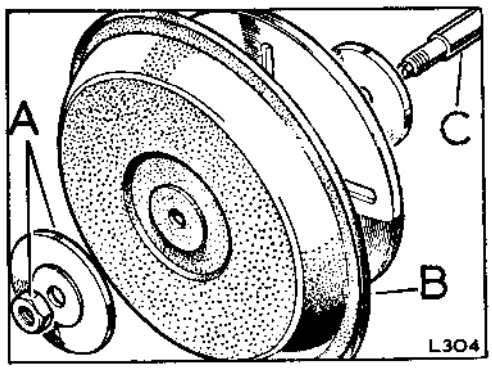


**Fig. H1-121. Power diaphragm fixings**

A—Fixings for diaphragm
B—Power diaphragm
C—Push rod

## Operation H1-15—*continued*

10. Remove the seal from the hydraulic piston.
11. Remove the fixings and withdraw the power diaphragm.

### Inspection

1. Clean all components in Girling cleaning fluid and allow to dry.
2. Examine the cylinder bore and piston, push rod ball end, non-return valve, poppet valve and hydraulic plunger. Ensure that they are free from corrosion and are not scored or scratched. If there is any doubt, fit new replacements.
3. All seals, joint washers and the diaphragms should be replaced with new components.

### To assemble

1. Smear the hydraulic piston seal and the hydraulic plunger seals with Castrol-Girling rubber grease, and the piston, cylinder bore, plunger and plunger bore with Castrol-Girling Brake and Clutch Fluid.

   **Important:** It is essential that all remaining components are assembled in a perfectly clean and dry condition.

2. Fit the large plain washer to the push rod, followed by the support plate, diaphragm and recessed washer. The support plate and diaphragm must be fitted lipped edge first, and the recessed washer, inner recess first. Secure the assembly.
3. Fit the seal to the groove in the hydraulic piston, with the seal lip towards the small diameter of the piston.
4. Place the 'O' ring seal for the push rod housing into the cylinder.
5. Insert the long spring and the hydraulic piston, small diameter end first, into the cylinder.
6. Press the seal, lipped side inward, into the push rod housing.
7. Insert the fibre washer, chamfered side first, into the push rod housing, followed by the seal (plain side first), seal retainer (flanged end first), seal retaining ring (chamfered side first) and the seal retaining spring.

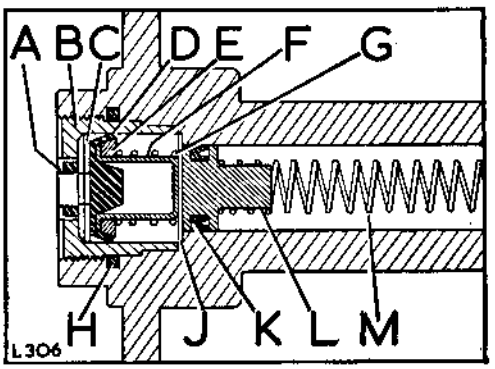


**Fig. H1-122. Hydraulic piston assembly**

A—Seal for push rod housing
B—Push rod housing
C—Backing washer for seal
D—Seal for push rod
E—Seal retaining ring
F—Seal retainer
G—Spring, retaining seal
H—'O' ring seal for push rod housing
J—Guide washer, three leg
K—Seal for hydraulic piston
L—Hydraulic piston
M—Spring for hydraulic piston

8. Place the three-legged guide washer in position on the hydraulic piston and screw the assembled push rod housing into the cylinder and tighten firmly.
9. Place the spring for the power diaphragm in position in the vacuum chamber, and insert the power diaphragm, locating the push rod into its housing. See Fig. H1-119.
10. Fit the connector tube to the air passage at the rim of the vacuum chamber.
11. Fit the cover to the vacuum chamber, aligning the connecting tube and ensuring that the diaphragm locates in the groove in the vacuum chamber rim. Tighten the fixings evenly and securely. See Fig. H1-118.
12. Locate the spring on to the back of the non-return valve and insert the assembly into its housing in the vacuum char..ber. Fit the spring guide, domed side first, followed by the elbow union and joint washer. See Fig. H1-117.

## Operation H1-15—*continued*

13. Fit the seals to the hydraulic plunger, with the seal lips towards the cone end of the plunger. See Fig. H1-116.

14. Insert the hydraulic plunger, cone end last, into its housing. Fit the 'O' ring seal to the housing and screw the assembly into the centre of the reaction diaphragm housing. See Fig. H1-116.

15. Place the joint washer in position on the reaction valve housing, ensuring that the hole for the air passage is aligned.

16. Fit the reaction diaphragm assembly, locating the domed end of the vacuum valve into the centre of the hydraulic plunger housing, and ensuring that the air passage hole is aligned.

17. Place the spring in position in the cover for the reaction diaphragm, and fit the cover ensuring that the air passage holes in the cover, diaphragm, joint washer and housing are all aligned. Tighten the fixings evenly and securely. See Fig. H1-115.

18. Locate the poppet valve, flat side inward, and the spring, small end first, into the centre of the reaction diaphragm cover.

19. Fit the gasket and air cleaner to the reaction diaphragm cover, with the inlet pipe positioned so that it will face downwards when on the vehicle. Secure with the circlip. See Fig. H1-114.

20. Fit new sealing washers between the vacuum chamber cover and hexagon shanks of the servo unit mounting studs. Securely tighten the studs.

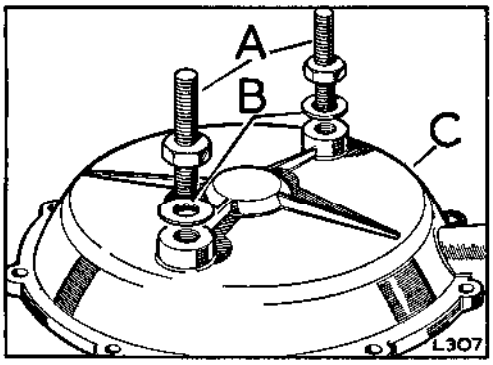


**Fig. H1-123. Mounting studs and seals**

A—Studs for servo unit mounting
B—Sealing washers for studs
C—Cover for vacuum chamber

## Servo unit (Girling mechanical type), overhaul—Operation H1-15A

*(For removal and refitting instructions, Operation* H1-14A *refers)*

Workshop hand tools:
Screwdriver (small)

Special tools:
Base plate and lever (see Fig. H1-129)

### General

The Girling Supervac is a mechanical servo unit designed to provide power assistance in an exact and controlled manner to the effort applied by the driver's foot to the brake pedal. Vacuum created in the engine inlet manifold is used to suspend in vacuum a diaphragm and by admitting atmospheric pressure to one side of the diaphragm, the force which assists the driver's pedal effort is obtained.

The unit is mounted between the brake pedal and the master cylinder and connected to these parts by push rods. Should a vacuum failure occur, the two push rods act as a single rod; the brakes will therefore work in the conventional manner but more effort will be required on the brake pedal.

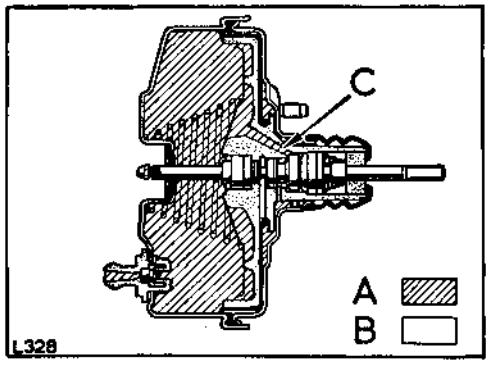


**Fig. H1-124. Brake 'off'**

A—Vacuum
B—Air
C—Vacuum port

The diaphragm is fully recuperated and is held against the rear shell by the diaphragm return spring. The valve rod assembly is also fully recuperated by the brake pedal return spring within the diaphragm plate, as far as the stop key, or valve retaining plate will allow. With the valve rod in this position the vacuum port is open and there is a vacuum each side of the diaphragm.

When the brake pedal is depressed, the valve rod assembly moves forward inside the diaphragm plate until the control valve closes the vacuum port; at this junction vacuum is still present on each side of the diaphragm. As the valve rod continues to move forward, the control piston moves away from the control valve, opening the atmospheric port which is formed between these two parts. Atmospheric pressure then enters the rear shell behind the diaphragm and is assisted by the valve rod in pushing the diaphragm plate forwards and thus the hydraulic push rod actuates the master cylinder plunger.

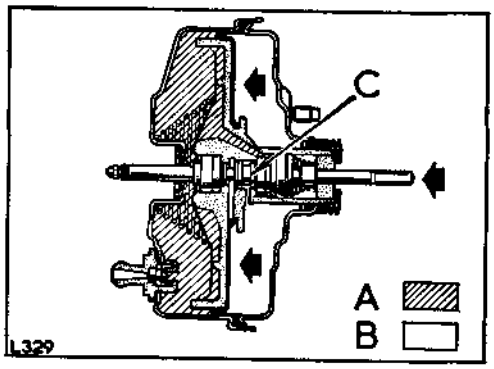


**Fig. H1-125. Brake applied**

A—Vacuum
B—Air
C—Atmospheric port

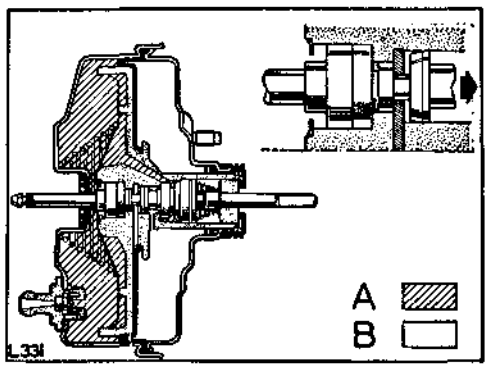


**Fig. H1-126. Brake held on**

A—Vacuum
B—Air

## Operation H1-15A—*continued*

When the brake pedal is held on, the diaphragm will momentarily continue to move forward and so compress the outer edges of the reaction disc. This movement causes the centre of the disc to extrude, pressing back the push rod (see insert) and thus closing the atmospheric port. Further movement of the brake pedal either opens the vacuum port or the atmospheric port, depending on whether the brake pedal is released or depressed.

Immediately the brake pedal is released, the vacuum port is opened and the atmospheric pressure in the rear chamber is extracted into the front chamber and from there to the inlet manifold via the non-return valve. The atmospheric port remains closed whilst the valve rod assembly returns to its original position, as shown previously, assisted by the diaphragm return spring. The diaphragm is then again 'suspended' in vacuum until the brake pedal is depressed.

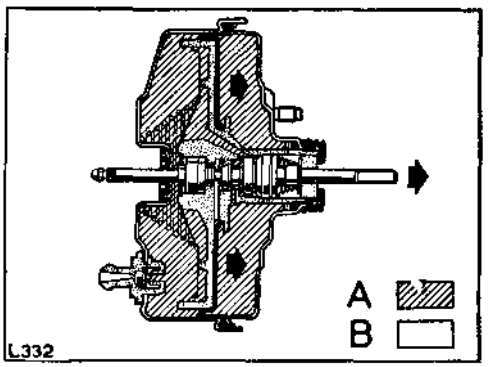


**Fig. H1-127. Brake released**
A—Vacuum
B—Air

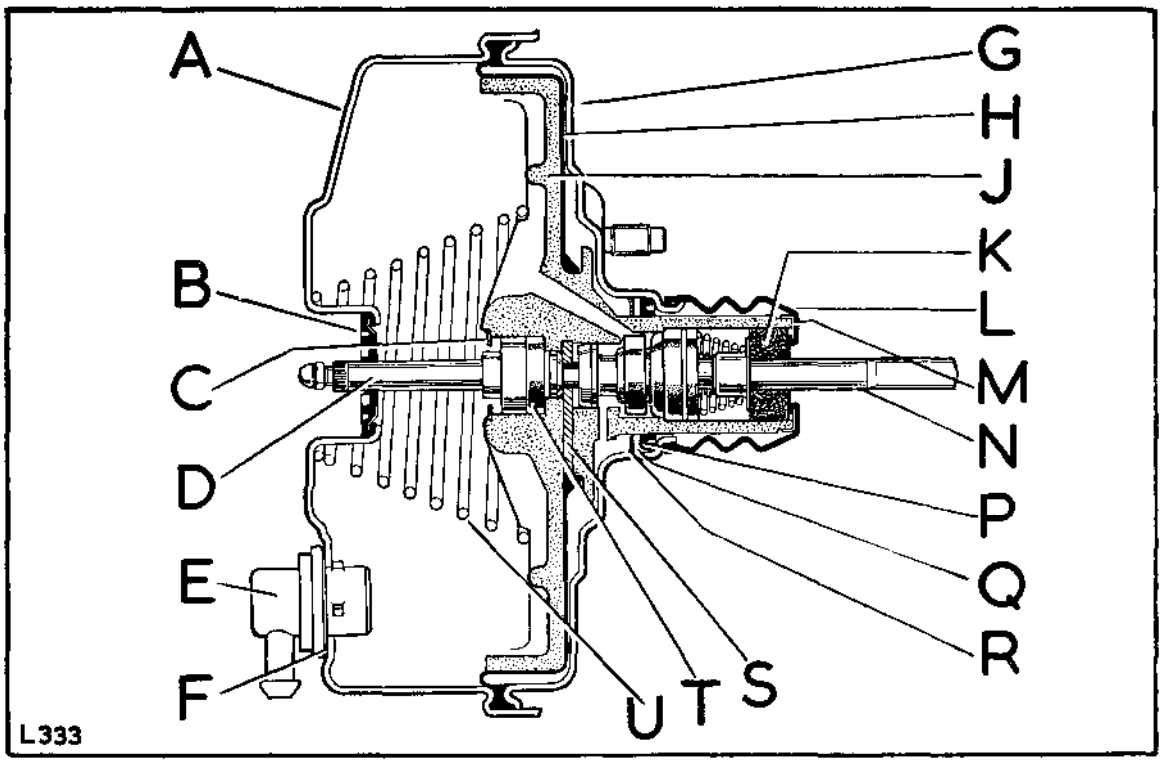


**Fig. H1-128. Section view of unit**

A—Front shell
B—Seal and plate assembly
C—Retainer sprag washer
D—Hydraulic push rod
E—Non-return valve
F—'O' ring
G—Rear shell
H—Diaphragm
J—Diaphragm plate
K—Filter
L—Dust cover
M—End cap
N—Valve operating rod assembly
P—Seal
Q—Bearing
R—Retainer
S—Valve retaining plate
T—Reaction disc
U—Diaphragm return spring

## Operation H1-15A—*continued*

### To dismantle

Special tools, shown in Fig. H1-129 are needed to dismantle and reassemble the unit. Without these tools, it is impossible to separate the two halves of the unit. If the push rod is damaged a new push rod kit is required because, due to an application of Loctite on the bolt threads, the existing push rod cannot be re-adjusted once the height is set. Before commencing to dismantle the unit, scribe a line across the two halves of the shells, as shown, to enable the shells to be reassembled in the same position.

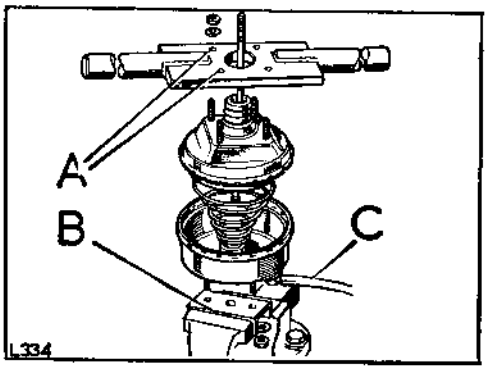


**Fig. H1-129. Tools required for overhauling unit**

A—Lever with holes drilled to suit the unit being serviced
B—Base plate with holes drilled to suit the unit being serviced
C—Vacuum hose

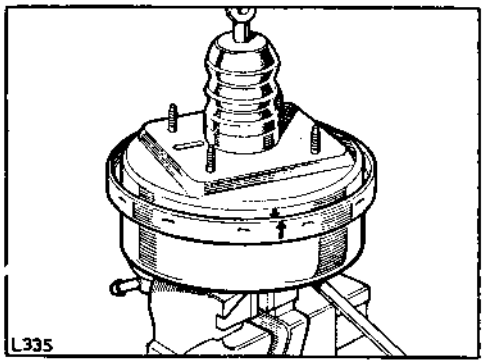


**Fig. H1-130. Scribing alignment marks across the two halves of the shell**

1. To separate the two halves of the assembly, clamp the base plate (Fig. H1-129) in a bench vice. Place the unit on top of this, inserting the studs of the front shell into the holes in the plate, and secure the unit to the plate by two spring washers and nuts.
2. Place the lever on top of the rear shell, locating the studs in the holes in the lever and secure with nuts and washers.
3. Connect one end of a vacuum hose to the non-return valve and the other to the engine inlet manifold. Start the engine. The vacuum draws the two halves of the shell together and compresses the diaphragm between the rim of the shells.

   To clear the lock on the outer rim, turn the lever anti-clockwise until the recesses in the rim of the shell are in line with the indentations in the front shell. Remove the vacuum hose from the non-return valve and switch off the engine. Depress the operating rod a few times to allow air to enter the unit.

   **Caution:** It is important to press down firmly on top of the unit when atmospheric pressure is allowed to enter, otherwise the diaphragm return spring may cause the two shells to fly apart.

   If the halves do not separate immediately, tap the front shell with a hide-faced hammer to break the bond between the shells.

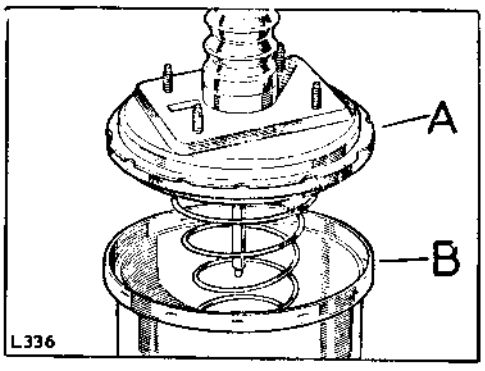


**Fig. H1-131. Removing rear shell**

A—Rear shell
B—Front shell

## Operation H1-15A—*continued*

4. Lift off the rear shell and diaphragm return spring. Remove the dust cover, end cap and filter then withdraw the diaphragm and diaphragm plate from the rear shell.
5. To remove the valve rod assembly, remove the diaphragm from the plate, depress the valve rod and shake out the valve retaining plate. The valve rod assembly may now be pulled from the neck of the diaphragm.

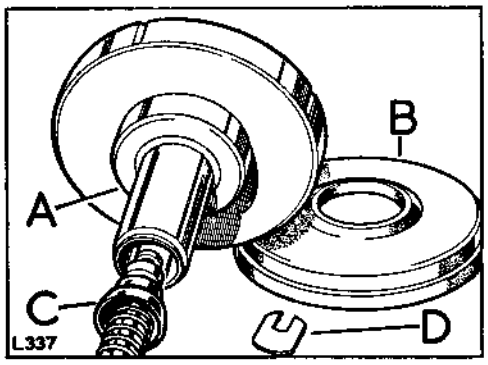


**Fig. H1-132. Diaphragm and valve rod assembly**

A—Diaphragm plate
B—Diaphragm
C—Valve rod assembly
D—Valve retaining plate

6. The hydraulic push rod is retained by a sprag washer to the diaphragm plate. Use a small screwdriver to ease the washer from the plate and withdraw the push rod and reaction disc.

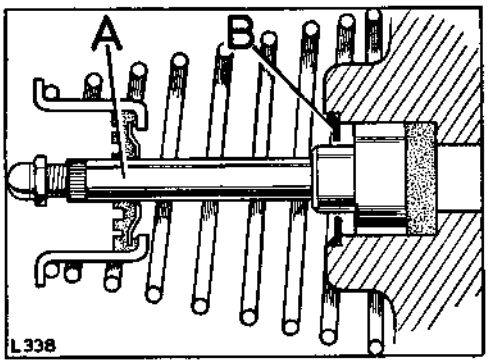


**Fig. H1-133. Hydraulic push rod**

A—Push rod
B—Sprag washer

7. Remove the seal, bearing and retainer from the neck of the rear shell. Ease out the retainer with a small screwdriver and press out the seal and bearing, but take care not to damage the sealing surface of the shell.
8. Press out the seal and plate assembly from the front shell.

## Operation H1-15A—*continued*

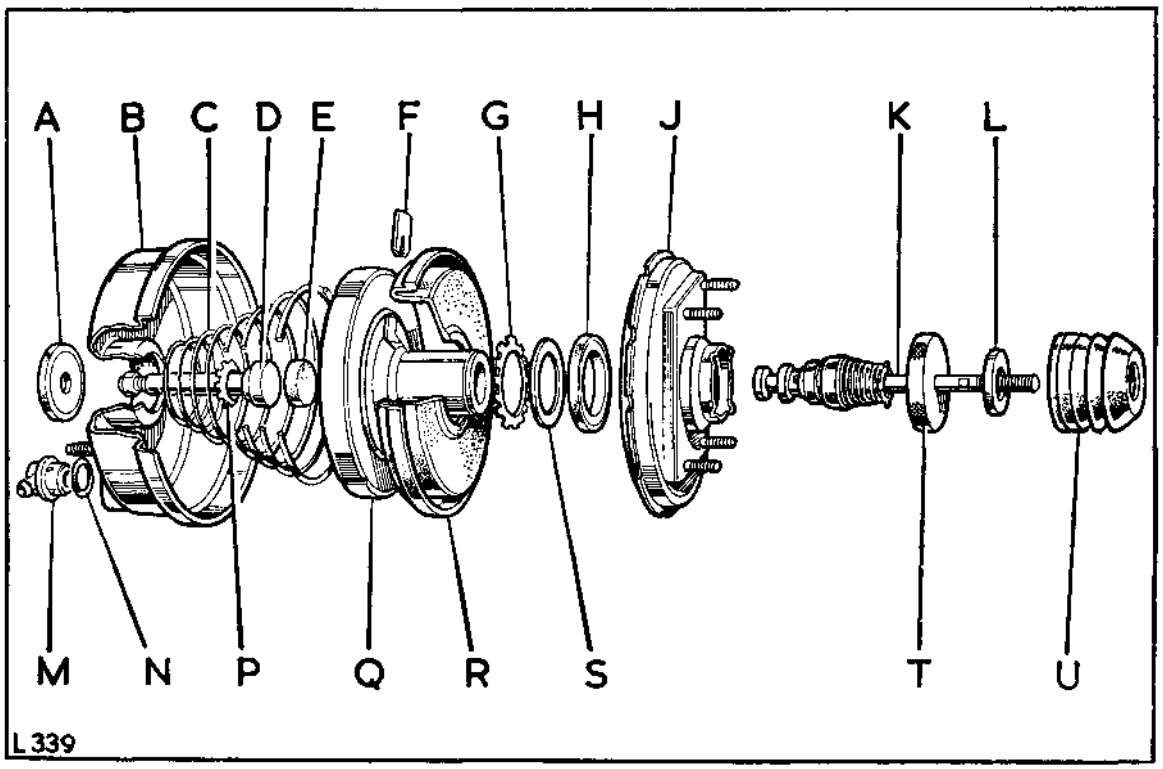


**Fig. H1-134. Exploded view of unit**

A—Seal and plate assembly
B—Front shell
C—Diaphragm return spring
D—Hydraulic push rod
E—Reaction disc
F—Valve retaining plate
G—Retainer
H—Seal
J—Rear shell
K—Valve operating rod assembly
L—End cap
M—Non-return valve
N—'O' ring
P—Retainer sprag washer
Q—Diaphragm plate
R—Diaphragm
S—Bearing
T—Filter
U—Dust cover

## Operation H1-15A—*continued*

9. Remove the non-return valve by pulling on the nozzle whilst exerting a side load. If the nozzle is straight, it is easier to remove the valve if the hose is left clipped on. Alternatively, remove the valve by levering with a suitable screwdriver, but care should be taken not to damage the front shell.

   The unit is now dismantled and ready for servicing.

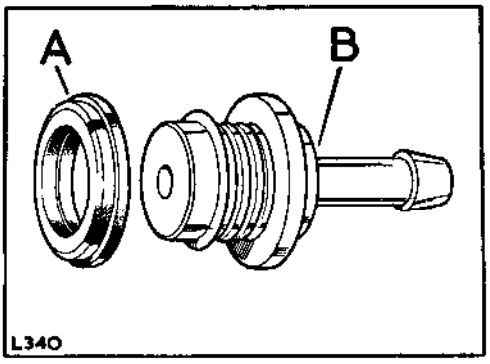


**Fig. H1-135. Non-return valve**

A—Seal
B—Non-return valve

### Inspection

1. Clean all parts with Girling cleaning fluid, making sure that all traces of dirt and grit are removed. Place the cleaned parts on to a clean sheet of paper and allow to dry.
2. Examine all components for obvious signs of wear or damage and fit new replacements as required.
3. Servo overhaul kits are available containing all the components, except the hydraulic push rod, for a normal service overhaul.

### To assemble

**Important:** The two servo greases contained in the overhaul kit must only be used as directed. THEY ARE NOT INTERCHANGEABLE. Considerable damage will be caused to the unit if they are incorrectly used.

1. Smear the seal and bearing with grease No. 64949008, then fit to the rear shell. The flat face of the seal should be adjacent to the bearing and the seal should be pressed firmly into position. Fit the retainer.
2. Smear the reaction disc and the hydraulic push rod with grease No. 64949008 and fit to the diaphragm plate. Refer to Fig. H1-133.
3. Smear grease No. 64949008 to the outer diameter of the diaphragm plate neck and bearing surfaces of the valve plunger. The valve rod assembly should now be inserted into the neck of the diaphragm plate and secured by the valve retaining plate. Fig. H1-132.
4. Lubricate the new grommet for the non-return valve with Girling grease No. 64949009. **Do not use any other lubricant.** Fit the grommet to the front shell and push in the non-return valve.
5. Smear grease No. 64949008 on to the seal and plate assembly. Place the seal and plate assembly over the push rod (with plate side leading) and press into the recess in the front shell.
6. Place the front shell on top of the base plate in the manner used when dismantling the unit. Locate the diaphragm return spring into the front shell. Smear the outer bead of the diaphragm with servo grease No. 64949009 and fit, complete with diaphragm plate, into the rear shell. Place this assembly on top of the spring. Put the lever on top of the unit, locating the studs in the shell into the holes in the lever. Before pressing the rear shell firmly down on the front shell, ensure that the scribed lines will be in alignment. Figs. H1-131 and H1-130.
7. Connect the vacuum hose to the non-return valve and start the engine. Press the two halves firmly together and turn the rear shell clockwise to bring it into the locked position. Remove the vacuum pipe from the non-return valve.
8. Ease the filter over the end of the push rod and press into the neck of the diaphragm plate. Fit the plastic end cap. Ease the dust cover on to the push rod and locate on the lugs of the rear shell.

**Important: The length of the hydraulic push rod should never be altered.** The adjustment bolt threads are coated with Loctite (Grade B) and will strip if moved. If, because of damage, a new push rod is required, setting instructions are included in the push rod kit and not included here as dimensions differ.

## Operation H1-15A—*continued*

**To test the unit**

1. Check all brakes for locking on, by rapidly applying the brake pedal several times and then checking to see if all wheels are free.
2. Check for vacuum hold by starting the engine and allowing it to run for several minutes to build a working vacuum in the unit.

After ten minutes apply the brake pedal and entry of air into unit should be heard. This means the unit is holding vacuum and is working correctly.

## Exhauster for servo unit, Diesel models, overhaul—Operation H1-16

Workshop hand tools:
Spanner size: $\frac{1}{4}$ in. BSF open end
Screwdriver (medium)

### To dismantle

1. Remove the woodruff key from the rotor shaft.
2. Remove the fixings and withdraw the cover and joint washer from the rotor housing.
3. Withdraw the rotor complete with vanes.
4. Prise the oil seal from the rotor housing.
5. Remove the inlet union from the rotor housing.

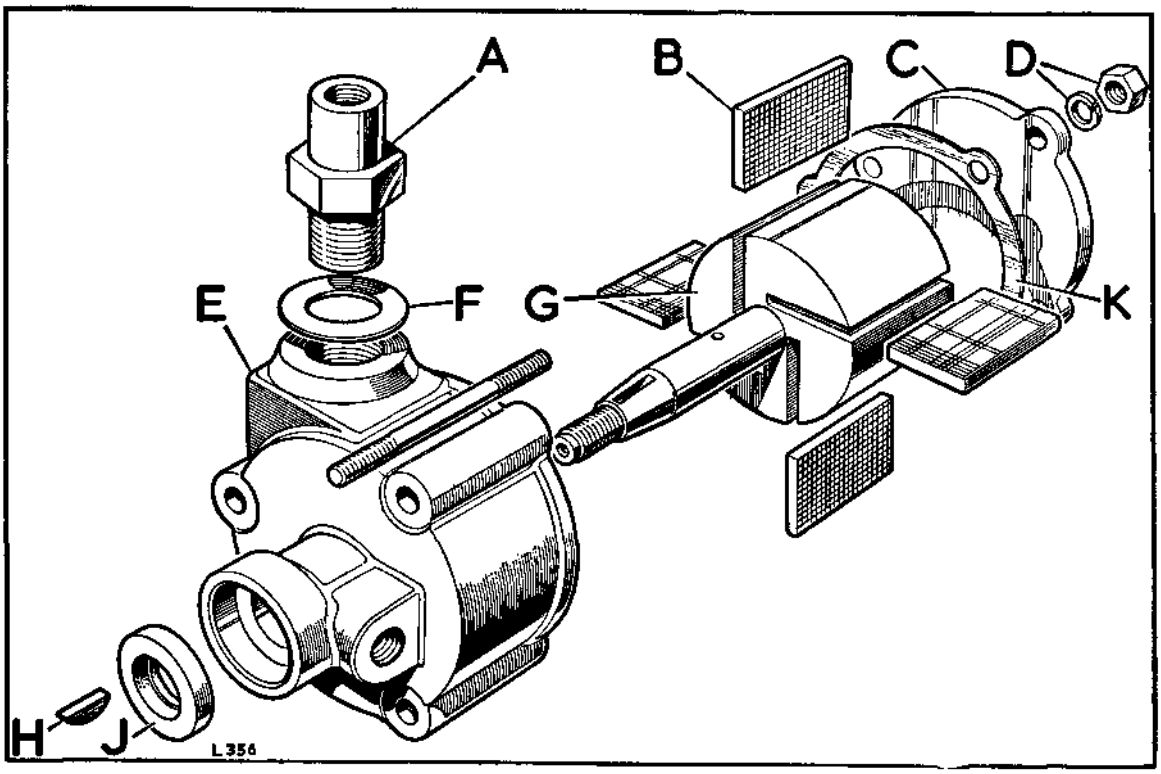


**Fig. H1-136. Rotary exhauster**

A—Inlet union
B—Vane for rotor
C—Cover for housing
D—Fixings for cover
E—Rotor housing
F—Washer for union
G—Rotor
H—Woodruff key
J—Oil seal
K—Joint washer for cover

## Operation H1-16—*continued*

### Inspection

1. Examine the bush in the rotor housing. If there is obvious wear between the bush and the rotor shaft, a new replacement unit complete should be obtained.
2. If the rotor bush is in good condition, check the rotor shaft where it forms a running seat for the oil seal. The surface of the shaft must be free from damage or scratches which would cause seal failure.
3. The rotor vanes, oil seal, joint washer for cover, sealing washer for inlet union and spring washers for fixings should all be replaced with new components. These items are all included in the exhauster repair kit.

### To assemble

1. Smear jointing compound on the outside diameter of the oil seal and press the seal, lipped side first, into the rotor housing.
2. Locate the four vanes, radiused edge outward, into the rotor slots; smear the rotor shaft with lubricating oil and insert the rotor into the housing.
3. Using the thickest joint washer from the repair kit, fit the cover to the housing, checking that the rotor turns freely while tightening the cover fixings. If the rotor becomes stiff to turn, add the thin joint washer between the housing and cover. Alternatively, if there is excessive rotor end float, use the thin joint washer only. Tighten the cover fixings evenly and securely.
4. Using the new sealing washer from the repair kit, fit the inlet union to the rotor housing.
5. Fit the woodruff key to the rotor shaft.

## Fault diagnosis—Brake system

| Symptom | Possible cause | Investigation | Remedy |
|---|---|---|---|
| **Spongy pedal action** | Air in hydraulic system | If available, use Girling hose clamps to locate air | Bleed the brake system as necessary |
| | Incorrect adjustment of brake shoes | Check brake shoe adjustment, also if applicable, check brake shoe steady post adjustment | Adjust as necessary |
| | Swollen rubber components, due to incorrect brake fluid | Check that fluid is Castrol-Girling Crimson Brake and Clutch fluid | Drain the complete brake system, renew the affected parts and replenish with correct fluid |
| **Loss of brake pedal pressure** | Leak in brake hydraulic system | Check the brake pipes, master cylinder and wheel cylinders. If available, use Girling hose clamps to locate the leak | Fit new parts as required and bleed the brake system |
| **Hard brake pedal** | Incorrect shoe adjustment | Check brake shoe adjustment, also if applicable, check brake shoe steady post adjustment | Adjust as necessary |
| | Incorrect brake linings | See Parts Catalogue for recommended type | Fit correct linings |
| | Restriction in master cylinder | Remove and dismantle master cylinder | Fit new parts as required |
| **Binding brake pedal** | Loose master cylinder mounting bolts | Check master cylinder fixings to brake pedal bracket. If the vehicle is fitted with a mechanical servo unit, check servo to brake pedal bracket fixings | Securely tighten |
| | Worn or tight pedal shaft | Apply lubrication via oil hole provided. If still unsatisfactory, remove pedal | Renew worn parts and lubricate during assembly |
| **Brake pedal fails to return** | Pedal return spring weak or missing | | Fit new spring |
| | Loose master cylinder mounting bolts | Check master cylinder fixings to pedal bracket. If vehicle is fitted with a mechanical servo unit, check servo to pedal bracket fixings | Securely tighten |
| | Sticking pedal shaft | Apply lubrication via oil hole provided. If still unsatisfactory, remove pedal | Renew worn parts and lubricate during assembly |
| **Poor brakes** | Incorrect brake shoe adjustment | Check brake shoe adjustment, also if applicable, check brake shoe steady post adjustment | Adjust as necessary |
| | Incorrect master cyllinder adjustment | Check push rod for free play | Adjust as necessary |
| | Water soaked linings | | Dry the brake linings by applying the brakes lightly whilst driving |
| | Glazed or oil contaminated linings | Remove brake drums and inspect linings. Check for worn oil seal in hub, or brake fluid leakage from wheel cylinders | Fit new linings. Fit new oil seal or wheel cylinder components as necessary |
| | Incorrect brake linings | See Parts Catalogue for recommended type | Fit correct linings |

## Fault diagnosis—Brake system—*continued*

| Symptom | Possible cause | Investigation | Remedy |
|---|---|---|---|
| **Chattering brakes** | Incorrect adjustment of brake shoes | Check brake shoe adjustment, also if applicable, check brake shoe steady post adjustment | Adjust as necessary |
| | Loose front wheel bearings | Check bearing adjustment and wear condition | Adjust or fit new bearings as required |
| | High spots on brake drum or distorted drum | Remove drum and check concentricity | Recondition or fit new brake drum and fit new linings as necessary |
| **Grabbing brakes** | Incorrect shoe adjustment | Check brake shoe adjustment, also if applicable, check brake shoe steady post adjustment | Adjust as necessary |
| | Grease, oil or brake fluid soaked linings | Remove brake drums and inspect linings. Check for worn oil seal in hub or fluid leakage from wheel cylinder | Fit new linings. Fit new oil seal or wheel cylinder components as necessary |
| | Incorrect linings | See Parts Catalogue for recommended type | Fit correct linings |
| | Scored or cracked drums | Remove drums and inspect | Recondition or replace with new |
| | High spots on drum or distorted drum | Remove drum and check concentricity | Recondition or replace with new |
| **Side pull** | Incorrect shoe adjustment | Check brake shoe adjustment, also if applicable, check brake shoe steady post adjustment | Adjust as necessary |
| | Incorrect tyre pressures | Check tyre pressures, Section R | Adjust as necessary |
| | Water and mud in brakes | Clean the brake assemblies, examine drums for scoring, and linings for wear | Fit new parts as necessary |
| | Clogged or crimped brake hose or pipe | Check flexible hoses. Check all brake pipes for signs of crimping | Clear hose or pipe with air pressure. Fit new hoses or pipes as necessary |
| | Loose wheel cylinders | Check wheel cylinder fixings | Tighten as necessary |
| | Mixed types of shoe linings | Check all shoe linings | Fit a set of one of the recommended types of lining |
| | Excessive wear in brake drum or scored brake drum | Remove drum and inspect | Recondition or fit new drum |
| **Squealing brakes** | Shoes binding on steady posts (where applicable) | Check steady post adjustment | Adjust as necessary |
| | Incorrect linings | See Parts Catalogue for recommended type | Fit correct linings |
| | Dust or road dirt in drums | Remove drums and clean thoroughly | If necessary, fit new linings and recondition or renew the brake drum |
| | Foreign bodies embedded in brake linings | Remove brake drums and examine linings | Fit new linings |
| | Loose wheel cylinders | Check wheel cylinder fixings | Tighten as necessary |
| | Sprung or bent brake shoes | Examine brake shoes | Fit new brake shoes |

## Fault diagnosis—Brake system—*continued*

| Symptom | Possible cause | Investigation | Remedy |
|---|---|---|---|
| | Distorted brake drum | Check drum for concentricity | Recondition or fit new replacement |
| | Bent brake anchor plate | Examine brake plate | Fit new brake anchor plate |
| **Brakes overheating** | Brake shoes in continuous contact with drum | Check brake shoe adjustment | Adjust as necessary |
| | Incorrect master cylinder adjustment | Check adjustment as described under master cylinder overhaul | Adjust as necessary |
| | High spots on brake drum | Check brake drum | Recondition or fit new drum |
| | Dust or road dirt in drums | Remove drums and clean thoroughly | If necessary, fit new linings and recondition or renew brake drum |
| | Defective master cylinder or swollen rubber components | Remove and dismantle master cylinder | Fit new parts as required |
| **Fading brakes** | Poor lining contact | Check brake shoe adjustment | Adjust as necessary |
| | Incorrect linings | See Parts Catalogue for recommended type | Fit correct linings |
| | Excessive heat | | Fit new linings to brake shoes |
| **One brake drags** | Incorrect brake adjustment | Check brake shoe adjustment. Also if applicable, check brake shoe steady post adjustment | Adjust as necessary |
| | Distorted rubber boots | Remove brake drum and check rubber boots at wheel cylinders | Fit new rubber boots |
| | Siezed brake shoe | Check that shoes move freely at pivot and wheel cylinder | Free the brake shoe from its anchor and smear the point of seizure lightly with grease |
| | Seized piston in wheel cylinder | Remove brake drum and check that pistons move freely in cylinders | Fit new wheel cylinder complete |
| | Weak or broken brake shoe pull-off springs | | Fit new springs |
| | Loose wheel cylinders | Check wheel cylinder fixings | Tighten as necessary |
| | Distorted brake drum | Check drum for concentricity | Recondition or fit new replacement |
| | Loose front wheel bearings | Check bearing adjustment and wear condition | Adjust or fit new bearings as required |
| | Restriction or obstruction in brake pipe | Check all brake pipes for signs of crimping | Clear brake pipe with air pressure. Fit new pipes as necessary |
| **All brakes drag** | Incorrect adjustment of brake shoes | Check brake shoe adjustment, also if applicable, check steady post adjustment | Adjust as necessary |
| | Incorrect master cylinder adjustment | Check push rod for free play | Adjust as necessary |
| | Distorted rubber boots | Remove brake drums and check rubber boots at wheel cylinders | Fit new rubber boots |

## Fault diagnosis—Brake system—*continued*

| Symptom | Possible cause | Investigation | Remedy |
|---|---|---|---|
| | Weak or broken brake shoe pull-off springs | | Fit new springs |
| | Restriction in master cylinder | Remove and dismantle master cylinder | Fit new parts as required |
| | Incorrect brake shoe linings (too thick) | See Parts Catalogue for correct type | Fit new linings |
| **Brake locks** | Oil or brake fluid soaked linings | Remove brake drum and inspect linings. Check for worn oil seal in hub or fluid leakage from wheel cylinder | Fit new linings. Fit new oil seal or wheel cylinder components as necessary |
| | Torn or loose linings | Check brake shoe linings for security. Check brake shoes for distortion | Fit new linings and brake shoes as necessary |
| | Loose wheel cylinders | Check wheel cylinder fixings | Tighten as necessary |
| | Swollen rubber components | Check wheel cylinders and master cylinder | Fit new components as necessary |
| **Pedal goes to floor board** | Lining excessively worn | Remove brake drums and check linings | Fit new linings |
| | Pedal incorrectly set | Check brake pedal adjustment as detailed under 'Brake pedal, remove and refit' | Adjust as necessary |
| | Leak in hydraulic system | Check the brake pipes, master cylinder and wheel cylinders. If available, use Girling hose clamps to locate the leak | Fit new parts as required and bleed the brake system |
| | Air in hydraulic system | If available, use Girling hose clamps to locate the air | Bleed the brake system as necessary |
| | Loose master cylinder mounting bolts | Check master cylinder fixings to brake pedal bracket. If the vehicle is fitted with a mechanical servo unit, check servo to brake pedal bracket fixings | Securely tighten |

# DATA

**Brakes:**

| | |
|---|---|
| Type | Girling |
| Operation | Hydraulic |

**Foot pedal: (except for models fitted with Girling mechanical servo unit)**

| | |
|---|---|
| Fit of bush on pedal shaft | .001 in. to .003 in. (0,02 mm to 0,07 mm) |
| Bush reamed bore | .751 in. —.0005 in. (19,07 mm —.013 mm) |

**Foot pedal used with Girling mechanical servo unit:**

| | |
|---|---|
| Fit of bush on pedal shaft | .001 in. to .003 in. (0,02 mm to 0,07 mm) |
| Bush reamed bore | .625 in. +.001 in. (15,875 mm +0,0254 mm) |

**Wheel brake unit, front and rear (10 in. brakes):**

Lining:

| | |
|---|---|
| Length | 8½ in. (215 mm) |
| Width | 1½ in. (38 mm) |
| Thickness | $\frac{3}{16}$ in. (4,75 mm) |

**Brake drum:**

| | |
|---|---|
| Standard diameter | 10 in. +.004 in. (254 mm +0,1 mm) |
| Reclamation limit | .030 in. (0,75 mm) oversize on diameter |

**Wheel brake unit, front—2¼ litre models (11 in. brakes):**

Lining:

| | |
|---|---|
| Length | 10.45 in. (265 mm) |
| Width | 2¼ in. (57 mm) |
| Thickness | $\frac{3}{16}$ in. (4,75 mm) |

**Wheel brake unit, front—2.6 litre models (11 in. brakes):**

Lining:

| | |
|---|---|
| Length | 10.45 in. (265 mm) |
| Width | 3 in. (76 mm) |
| Thickness | $\frac{3}{16}$ in. (4,75 mm) |

**Wheel brake unit, rear (11 in. brakes):**

Lining:

| | |
|---|---|
| Length | 8.6 in. (218 mm) |
| Width | 2¼ in. (57 mm) |
| Thickness | $\frac{3}{16}$ in. (4,75 mm) |

**Brake drum:**

| | |
|---|---|
| Standard diameter | 11 in. +.004 in. (279,4 mm +0,10 mm) |
| Reclamation limit | .030 in. (0,75 mm) oversize on diameter |

**Transmission brake:**

Lining:

| | |
|---|---|
| Length | 8.64 in. (219 mm) |
| Width | 1¾ in. (44,5 mm) |
| Thickness | $\frac{3}{16}$ in. (4,75 mm) |

## DATA—*continued*

**Brake drum:**

| | |
|---|---|
| Standard diameter | 9 in. +.004 in. (228,6 mm +0,1 mm) |
| Reclamation limit | 0.30 in. (0,75 mm) oversize on diameter |

**Master cylinder:**

| | |
|---|---|
| Type (88 models) | Girling CV |
| Bore | $\frac{3}{4}$ in. (19 mm) |
| Stroke | $1\frac{1}{2}$ in. (38 mm) |
| Type (109 models) | Girling CB |
| Bore | 1 in. (25 mm) |
| Stroke | $1\frac{1}{2}$ in. (38 mm) |
| Pushrod free movement | $\frac{1}{16}$ in. (1,5 mm) |

**Master cylinder used with Girling mechanical servo unit:**

| | |
|---|---|
| Type | Girling CV |
| Bore | 1 in. (25 mm) |
| Stroke | $1\frac{1}{2}$ in. (38 mm) |
| Pushrod free movement | Not adjustable, pre-set during manufacture |

**Servo unit (two types in use):**

| | |
|---|---|
| Type | Clayton Dewandre |
| Operation | Hydraulic slave cylinder |
| Location | In pipe line between master cylinder and junction to wheel cylinders |
| Type | Girling 'Supervac' type 38 |
| Operation | Mechanical, acting directly on master cylinder |
| Location | Mounted on brake pedal bracket in engine compartment |

# SECTION J—CHASSIS

# INDEX—CHASSIS

**Note:** A comprehensive, detailed index is included at the end of this manual


| Description | Operation Number |
|---|---|
| Chassis frame | 1 |
| Front bumper | 2 |
| Battery carrier and air cleaner support | 3 |

## Frame alignment, to check—Operation J1-1

### To check

Figs. J1-2 and J1-3 show the various dimensions that should be used as a guide in checking frame alignment. Fig. J1-1 illustrates the diagonal measurements which may be taken to check the frame for 'squareness'. Extreme care must be taken when checking for malalignment.

When the body is removed, the frame may easily be checked against the measurements in Figs. J1-2 and J1-3. If the body is in position, measurements may be taken with the aid of a plumb-bob and chalk as follows:

1. Place the vehicle on a level floor.
2. Hold the plumb line against one of the measuring points, with the bob slightly above the floor; mark the floor directly beneath the bob.
3. Repeat for other measuring points.
4. Move the vehicle away and measure between the chalk marks.

Care should be taken when measuring diagonals, that exactly corresponding points are used on each side of the frame.

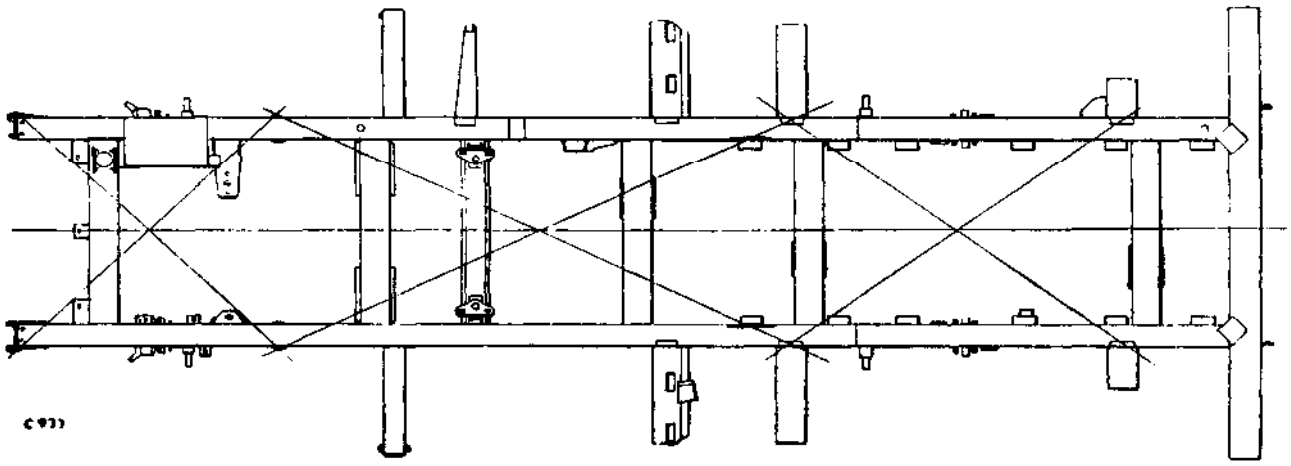

**Fig. J1-1. Chassis frame diagonal measurements**

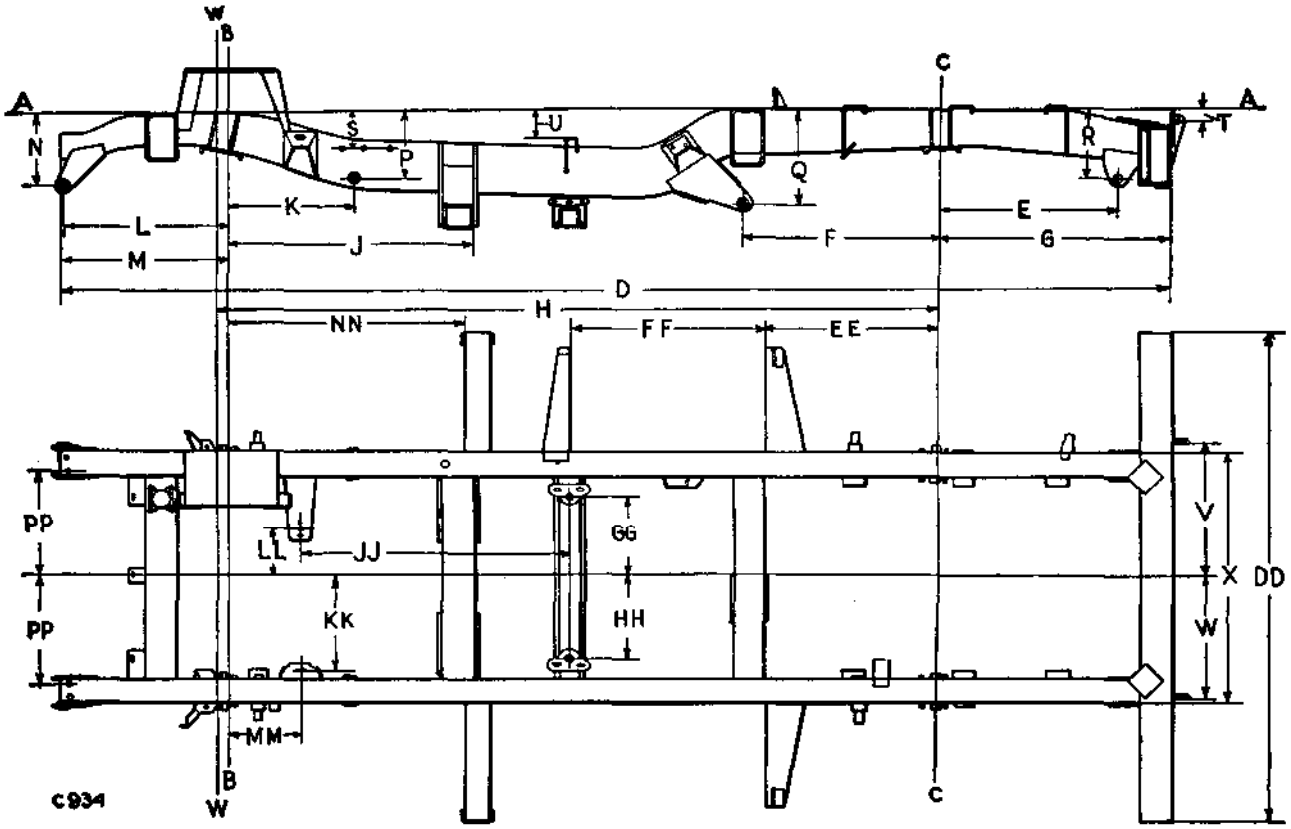


**Fig. J1-2. Chassis frame dimensions, 88**

| | | | |
|---|---|---|---|
| AA—Datum line | | S—4¼ in. | (121 mm) |
| BB—Front datum | | T—1 1/32 in. | (29 mm) |
| WW—Centre line of front axle | | U—3¼ in. | (83 mm) |
| CC—Centre line of rear axle | | V—17 in. | (432 mm) |
| D—134 1/32 in. | (3,42 m) | W—15¼ in. | (387 mm) |
| E—21¼ in. | (540 mm) | X—31 in. | (787 mm) |
| F—24 in. | (610 mm) | DD—60½ in. | (1,53 m) |
| G—28 5/16 in. | (713 mm) | EE—21¼ in. | (540 mm) |
| H—88 in. | (2,235 m) | FF—24 in.* | (610 mm) |
| J—29½ in. | (743 mm) | GG—10⅛ in. ± 1/32 in. | (257 mm ± 0,8 mm) |
| K—14¾ in. | (375 mm) | HH—10 in. ± 1/32 in. | (254 mm ± 0,8 mm) |
| L—20 in. | (508 mm) | JJ—32⅞ in. ± 1/32 in. | (835 mm ± 0,8 mm) |
| M—20 11/16 in. | (523 mm) | KK—11.406 in.** | (290 mm) |
| N—9 in. | (229 mm) | LL—6 3/16 in. | (167 mm) |
| P—8⅜ in. | (213 mm) | MM—8 in. | (203 mm) |
| Q—11 7/16 in. | (297 mm) | NN—28½ in. | (718 mm) |
| R—7 1/16 in. | (182 mm) | PP—13 1/16 in. ± 1/64 in. | (332 mm ± 0,5 mm) |

*23¾ in. (603 mm) } Early
**11 3/16 in. ± 1/32 in. (294 mm ± 0,8 mm) } models

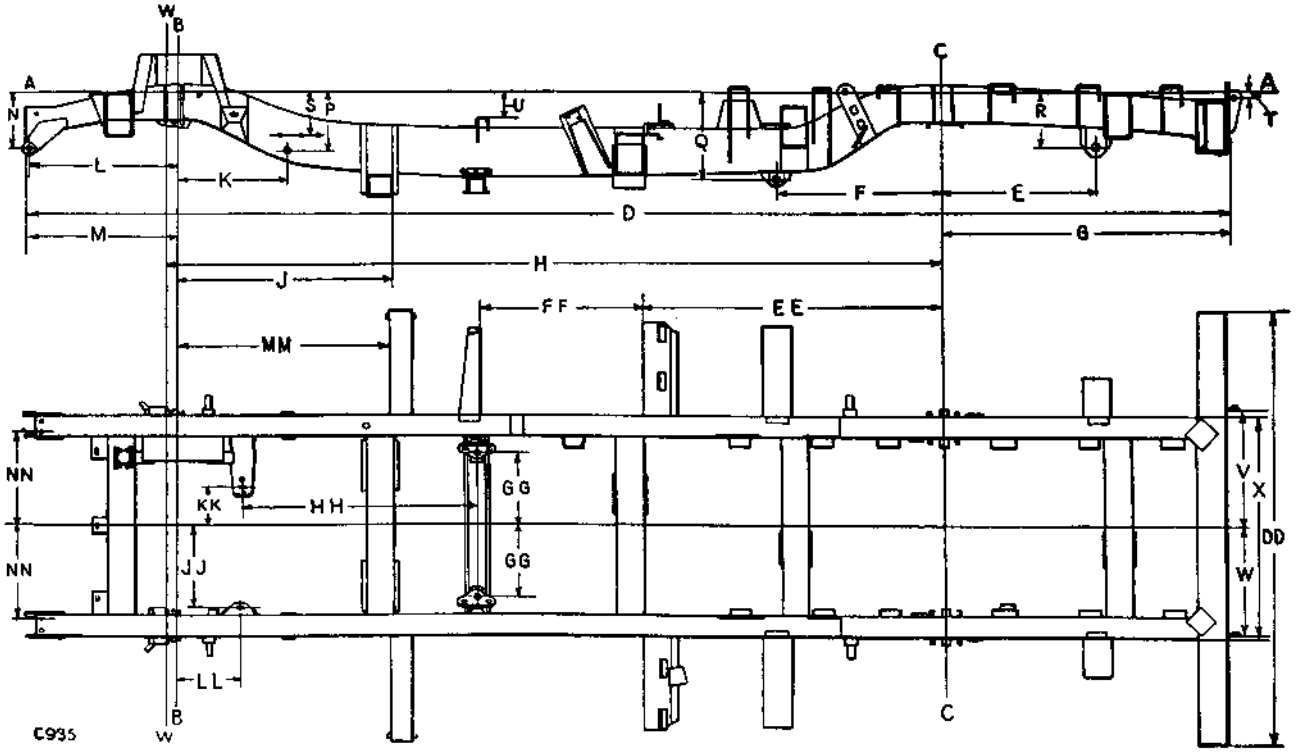


**Fig. J1-3. Chassis frame dimensions, 109**

AA—Datum line
BB—Front datum
WW—Centre line of front axle
CC—Centre line of rear axle

| | | |
|---|---|---|
| D | 166 $\frac{11}{16}$ in. | (4,24 m) |
| E | 21 $\frac{1}{2}$ in. | (540 mm) |
| F | 24 in. | (610 mm) |
| G | 39 $\frac{3}{8}$ in. | (1,00 m) |
| H | 109 in. | (2,77 m) |
| J | 29 $\frac{1}{2}$ in. | (743 mm |
| K | 14 $\frac{3}{8}$ in. | (375 mm) |
| L | 20 in. | (508 mm) |
| M | 20 $\frac{27}{32}$ in. | (523 mm) |
| N | 9 in. | (229 mm) |
| P | 8 $\frac{3}{8}$ in. | (213 mm) |
| Q | 11 $\frac{11}{16}$ in. | (297 mm) |
| R | 8 $\frac{1}{16}$ in. | (205 mm) |
| S | 4 $\frac{3}{4}$ in. | (121 mm) |
| T | 1 $\frac{5}{32}$ in. | (29 mm) |
| U | 3 $\frac{1}{2}$ in. | (83 mm) |
| V | 17 in. | (432 mm) |
| W | 15 $\frac{1}{2}$ in. | (387 mm) |
| X | 31 in. | (787 mm) |
| DD | 60 $\frac{1}{2}$ in. | (1,53 m) |
| EE | 42 $\frac{1}{8}$ in. | (1,07 m) |
| FF | 24 in.* | (610 mm) |
| GG | 10 $\frac{1}{8}$ in. $\pm \frac{1}{32}$ in. | (257 mm $\pm$0,8 mm) |
| HH | 32 $\frac{3}{8}$ in. $\pm \frac{1}{32}$ in. | (835 mm $\pm$0,8 mm) |
| JJ | 11.406 in.** | (290 mm) |
| KK | 6 $\frac{7}{16}$ in. | (167 mm) |
| LL | 8 in. | (203 mm) |
| MM | 28 $\frac{1}{2}$ in. | (718 mm) |
| NN | 13 $\frac{1}{16}$ in. $\pm \frac{1}{64}$ in. | (332 mm $\pm$0,50 mm) |

*23 $\frac{3}{4}$ in. (603 mm) } Early
**11 $\frac{7}{16}$ in. $\pm \frac{1}{32}$ in. (294 mm $\pm$0,8 mm) } models

## Front bumper, to remove and refit—Operation J1-2

Workshop hand tools:
Spanner size: $\frac{9}{16}$ in. AF open end

### General

The channel-section front bumper is bolted to the chassis side members, so that it may be removed to facilitate repair after accidental damage.

### To remove

1. Remove four nuts, bolts and washers securing the front bumper to the chassis side members.
2. Withdraw the front bumper from the chassis.

### To refit

Locate the front bumper in position and secure to the chassis side members, using four bolts with plain washers under their heads and four plain washers and self-locking nuts.

## Battery carrier and air cleaner support, to remove and refit—Operation J1-3

Workshop hand tools:
Spanner sizes: $\frac{7}{16}$ in. AF, $\frac{1}{2}$ in. AF open end

### General

The battery and air cleaner position varies according to the particular model. In most applications, a combined battery carrier and air cleaner support is located in the RH side of the engine compartment. Diesel-engined models have an additional battery carrier fitted to the LH side of the chassis. Certain six-cylinder engine models have the air cleaner in the engine compartment and the battery carrier mounted on the LH chassis member.

### To remove

1. Remove the air cleaner. Section A.
2. Disconnect the battery leads, remove the securing cover and lift the battery clear. Note that there are two batteries and two supports on Diesel vehicles.
3. Remove the battery and air cleaner support from the chassis frame (this action releases the earth leads).

### To replace

1. Reverse the removal procedure.

# SECTION K—COOLING SYSTEM

### Brief description of cooling system

The engine cooling system operates on the conventional thermo-syphon principle, and is impeller pump assisted.

The pump, which carries a fan to assist air flow through the radiator block, is belt driven from the crankshaft pulley.

A thermostat is fitted to ensure rapid engine warm-up. When starting from cold, the thermostat prevents coolant flow through the radiator block until a predetermined temperature has been attained. Upon reaching the operating temperature the thermostat will automatically redirect the coolant flow through the radiator.

The cooling system is designed to operate under pressure, early models at 10 lb/sq in. (0,7 kg/cm²), later models at 9 lb/sq in. (0,6 kg/cm²). The pressure relief valve and also a depression relief valve are incorporated in the radiator filler cap.

On later engines, a semi-sealed cooling system is used in conjunction with an overflow bottle which receives any coolant overflow from the radiator header tank. When the engine is cooling after running, that is, with a depression in the header tank, the coolant trapped in the overflow bottle returns to the header tank.

The coolant level in the system is checked and replenished at the radiator filler cap only. With a cold engine, the correct coolant level is ½ in. to ¾ in. (12 mm to 19 mm) below the bottom edge of the filler neck.

There must always be coolant in the overflow bottle sufficient to cover the end of the pipe from the header tank.

Two points are provided for draining the system, a tap at the side of the engine block (RH side for 2.6 litre engines, LH side for 2¼ litre engines) and a drain plug at the base of the radiator block.

Where a heater is fitted, close off the heater supply tap at the engine before draining the system.

### Frost precautions

As a thermostat is fitted to the cooling system it is possible for the radiator block to freeze in cold weather even though the engine temperature is quite high, for this reason a good quality glycol-base anti-freeze solution must be used during cold weather.

### Coolant system capacities

**Bonneted Control Models**

| Engine Type | Imperial Pints | US Pints | Litres | Anti-freeze Percentage | Frost Precaution |
|---|---|---|---|---|---|
| 2.6 litre Petrol | 20 | 24 | 11,2 | 33⅓% | —32°C (—25°F) |
| 2¼ litre Petrol | 18 | 21½ | 10,25 | | |
| 2¼ litre Diesel | 17½ | 21 | 10,0 | | |

## INDEX TO OPERATIONS — SECTION K


| Description of Listed Operations | Page Number | Operation Number |
|---|---|---|
| Thermostat, to overhaul | — | K1-1 |
| Water pump, to overhaul | — | K1-2 |
| Radiator, to replace | — | K1-3 |
| Coolant system, to check | — | K1-4 |

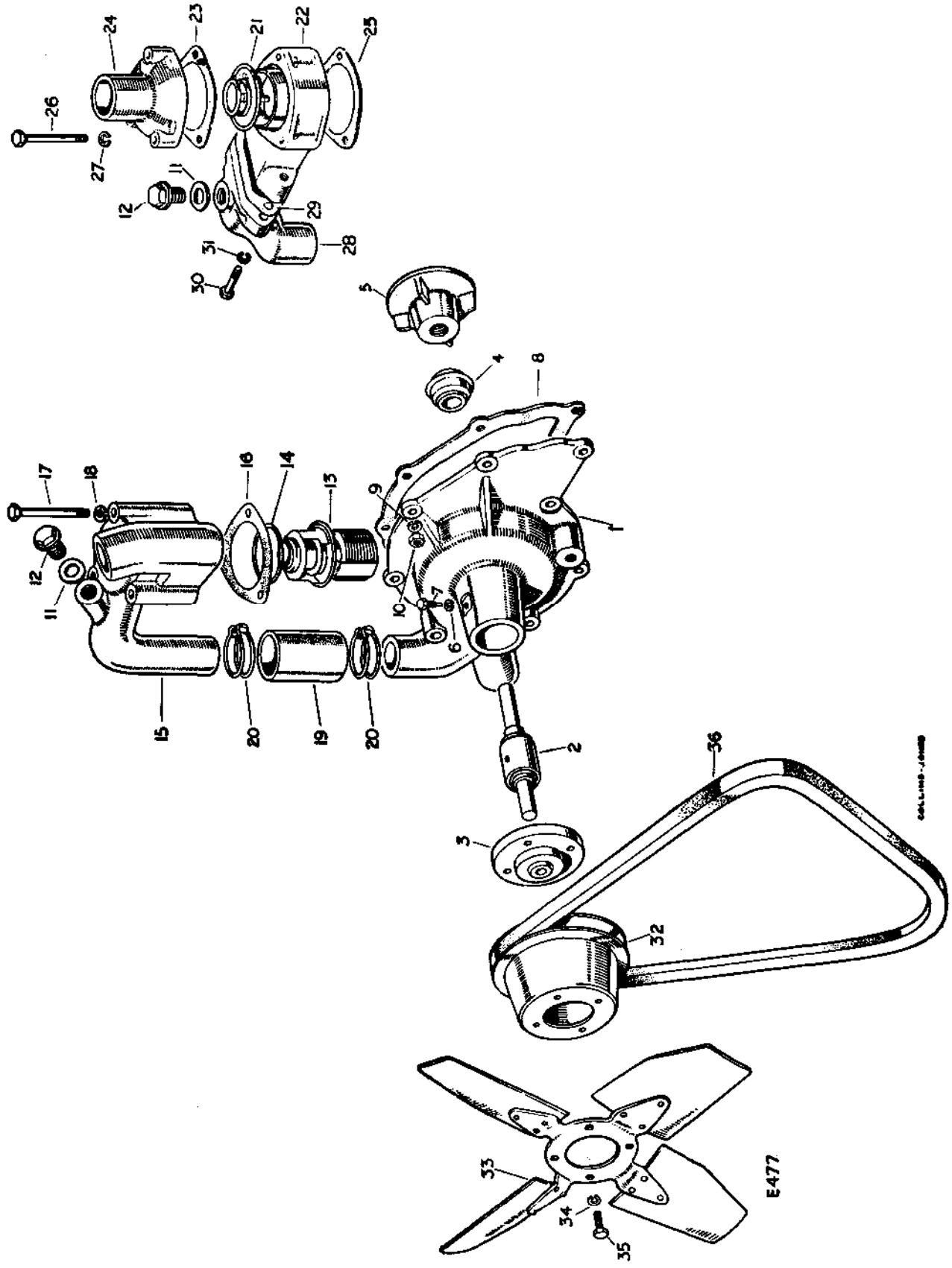


**Fig. K1-1. Layout of cooling system components, 4 cylinder models**

**Key to Fig. K1-1. Layout of cooling system components, 4 cylinder models**

1 Water pump casing
2 Pump spindle and bearing
3 Hub for fan
4 Carbon ring and seal unit
5 Impeller for pump
6 Spring washer } Locating bearing casing
7 Special set bolt }
8 Joint washer for water pump
9 Spring washer } Fixing water pump to front cover
10 Nut }
11 Joint washer } For heater return in water outlet pipe
12 Plug (⅜ in. BSP) }
13 Thermostat
14 'O' ring, thermostat to water outlet pipe
15 Water outlet pipe, thermostat to radiator
16 Washer for outlet pipe
17 Set bolt (¼ in. UNF x 2½ in. long) } Fixing outlet pipe to cylinder head
18 Spring washer }
19 Hose for by-pass pipe
20 Clip for hose
21 Thermostat, bellows type
Thermostat, wax type
'O' ring for thermostat
22 Thermostat housing
23 Joint washer for thermostat housing, upper
24 Water outlet pipe, thermostat to radiator
25 Joint washer for thermostat housing, lower
26 Set bolt (¼ in. UNF x 2½ in. long) } Fixing thermostat housing and outlet pipe to cylinder head
Set bolt (¼ in. UNF x 2¾ in. long) }
27 Spring washer }
28 Thermostat by-pass pipe
29 Joint washer for by-pass pipe
30 Set bolt (5/16 in. UNF x 1 in. long) } Fixing by-pass pipe to thermostat housing
31 Spring washer }
32 Fan pulley
33 Fan blade
34 Spring washer } Fixing fan blade and pulley to hub
35 Set bolt (¼ in. UNF x ¾ in. long) }
36 Fan and dynamo belt

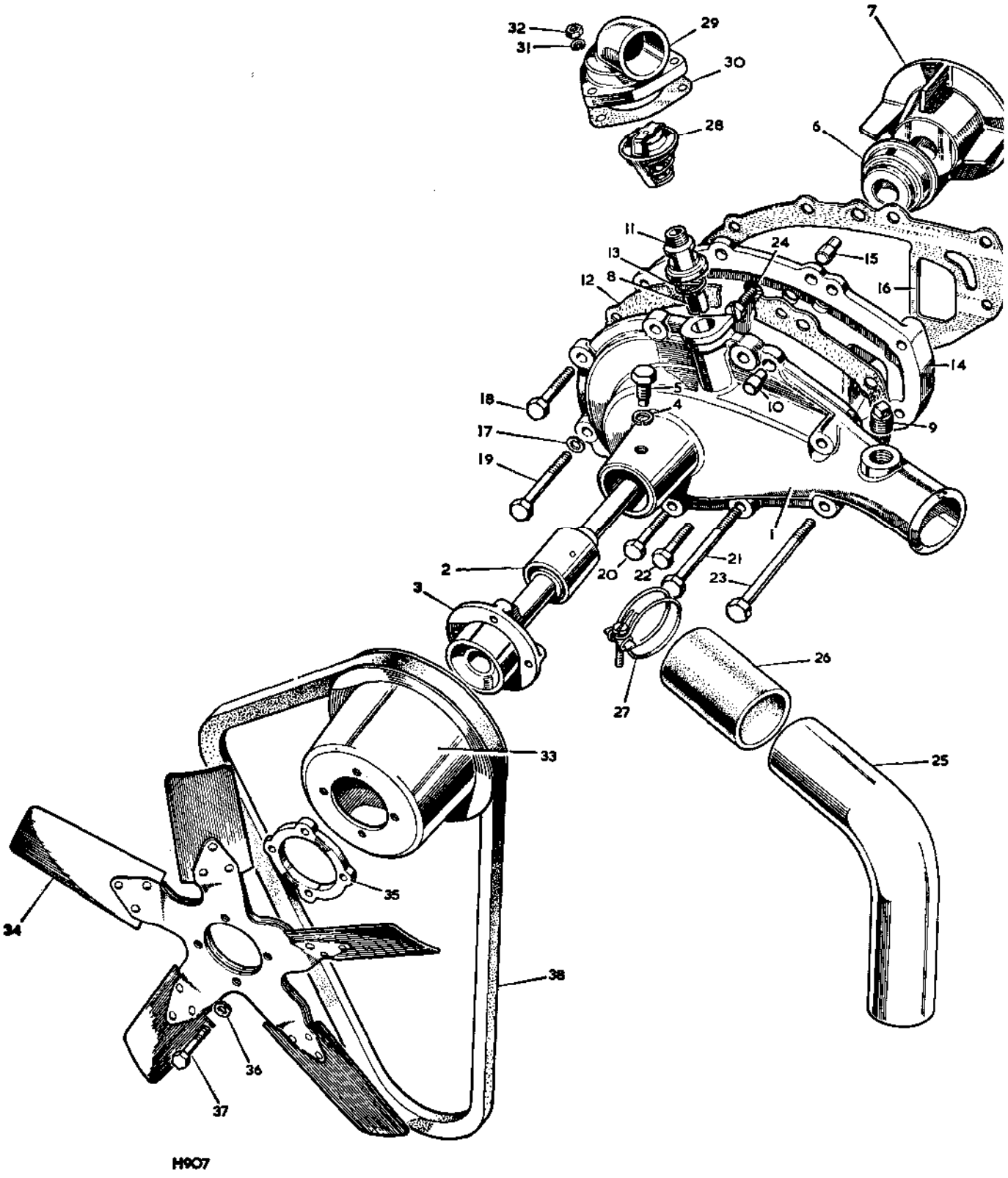


**Fig. K1-2. Layout of cooling system components, 6 cylinder models**

**Key to Fig. K1-2. Layout of cooling system components, 6 cylinder models**

1 Water pump assembly
2 Spindle and bearing complete
3 Hub for fan blade
4 Spring washer } Locating bearing
5 Special set bolt } in casing
6 Carbon ring and seal
7 Impeller for pump
8 Tube for thermostat by-pass
9 Plug (⅜ in. BSP) for heater adaptor hole in casing
10 Dowel for water pump casing
11 Connector, by-pass to water pump
12 Joint washer for water pump
13 Rubber seal, pump to cylinder head
14 Adaptor for water pump
15 Dowel for adaptor
16 Joint washer for adaptor
17 Spring washer
18 Set bolt (¼ in. UNF x 1 in. long)
19 Set bolt (¼ in. UNF x 1⅜ in. long)
20 Set bolt (¼ in. UNF x 1½ in. long)
21 Set bolt (¼ in. UNF x 2¼ in. long)
22 Set bolt (¼ in. UNF x ⅞ in. long)
23 Set bolt (¼ in. UNF x 2¾ in. long)
24 Special 'Wedgelok' screw
} Fixing water pump and adaptor to block
25 Inlet pipe for water pump
26 Hose, water inlet pipe to pump
Clip, hose to inlet pipe
27 Clip, hose to pump
28 Thermostat, wax type
29 Outlet pipe to radiator
30 Joint washer for water outlet pipe
31 Spring washer } Fixing pipe to
32 Nut (¼ in. UNF) } cylinder head
33 Pulley for fan
34 Fan blade
35 Distance piece for fan blade
36 Spring washer } Fixing pulley
37 Set bolt (¼ in. UNF x 1¼ in. long) } and blade to hub
38 Fan belt

## Thermostat, to overhaul—Operation K1-1

*(For removal and refitting details, Section A refers)*

Workshop hand tools:
Suitable small rule

### General

Two types of thermostat are in use, an early type containing ethyl-alcohol and a later type containing wax. The types are recognisable when removed, see Fig. K1-3 and Fig. K1-4.

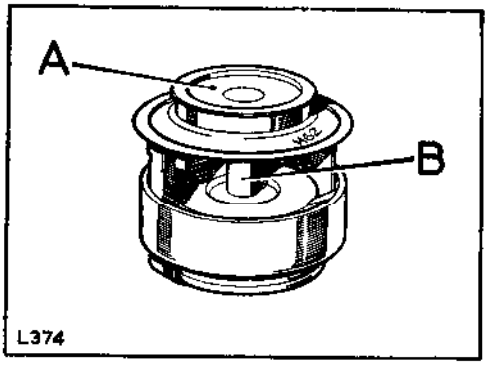


**Fig. K1-3. Ethyl-alcohol type thermostat**
A—Bleed hole, to prevent airlocks when re-filling system
B—Operating valve

The wax-filled type ensures that pressure fluctuations within the cooling system do not influence the thermostat operation and this type may be fitted to replace the ethyl-alcohol type provided that:

(a) On early 2¼ litre petrol engines a modified water outlet pipe is also fitted.

(b) On early 2¼ litre diesel engines a combined water temperature and oil pressure gauge is also fitted.

Thermostats fitted to Land-Rover engines commence to open at a temperature value of between 70.6°C to 78.5°C (159°F to 173°F) and should be fully open at 90°C (194°F). They are not adjustable.

Thermostats which satisfy the following inspection and functional test are suitable for further use.

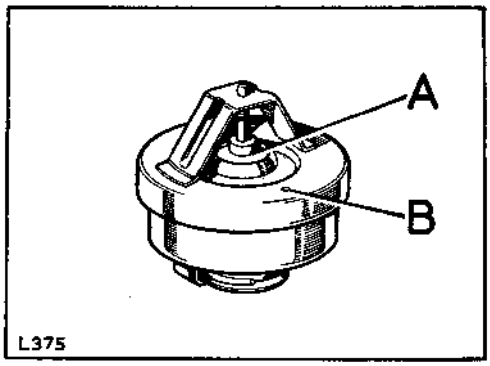


**Fig. K1-4. Wax-filled type thermostat**
A—Operating valve
B—Bleed hole, to prevent airlocks when re-filling system

### Inspection and test, both types of thermostat

1. Examine the thermostat to ensure that it is fully closed.
2. Check the dimension 'B', in Figs. K1-5 or K1-6 as applicable, with the thermostat at ambient temperature.

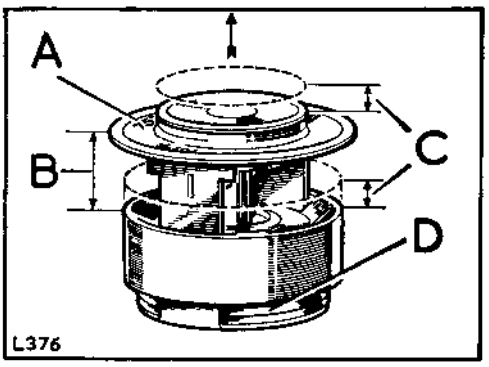


**Fig. K1-5. Thermostat operation, ethyl-alcohol type**
A—Thermostat opening temperature marked on this face
B—Dimension with thermostat valve closed
C—Dimension ¼ in. (9,5 mm) approximately when fully open
D—Bellows assembly

## Operation K1-1—*continued*

3. Immerse the thermostat in boiling water for a period of 45 to 60 seconds.

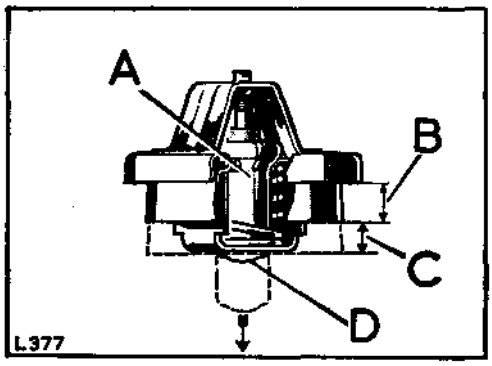


**Fig. K1-6. Thermostat operation, wax filled type**
A—Wax filled tube
B—Dimension with thermostat valve closed
C—Dimension ⅜ in. (9,5 mm) approximately when fully open
D—Thermostat opening temperature marked on this face

4. With the thermostat immersed, check that the valve has opened by ⅜ in. (9,5 mm) approximately as shown at 'C' in the appropriate illustration.

5. Allow the thermostat to cool to ambient temperature and ensure that the valve has fully returned to its seating.

6. Examine the thermostat for mechanical defects and damage.

**Note:** Correct engine functioning requires the use of a thermostat in the cooling system.

A thermostat sticking closed will result in engine overheating; sticking open will prevent the required quick warm-up and lead to engine corrosion, wear and to oil contamination.

Therefore do not allow the engine to run continuously without a serviceable thermostat fitted.

## Water pump, to overhaul—Operation K1-2

*(For removal and refitting details, Section A refers)*

Workshop hand tools:

Spanner sizes: $\frac{7}{16}$ in. AF open end
Suitable drift, 1 lb hammer, Side-cutting pliers,
Feeler gauges

Special tools:

Suitable hand press

### To overhaul

1. Remove the bearing location bolt, place the pump in a soft-jawed vice and drift out the impeller, bearing and spindle as an assembly from the pump body and from hub.
2. Cut through the seal and remove from spindle, insert the spindle into the water pump body, so that the impeller is in the position of the fan pulley. The spindle and bearing may now be drifted out of the impeller.

### Inspection

1. Examine the spindle and bearing assembly; it need not be renewed if the bearing is satisfactory and the spindle is free from excessive corrosion.

   Clean any corroded portion of the spindle and paint with a suitable chlorinated rubber primer or, alternatively, with a good quality aluminium paint or other anti-corrosive paint.
2. Where a steel deflector washer is fitted to the pump spindle, (later models) check that there is a minimum clearance of .018 in. (0,46 mm) between the washer and the bearing housing face.

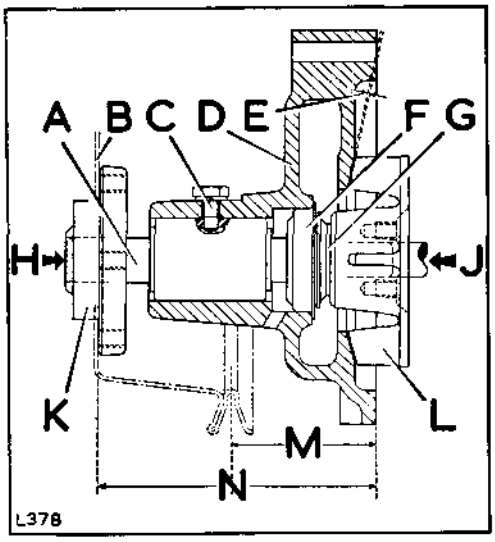


**Fig. K1-7. Sectioned view of water pump, 2.6 litre models**

A—Pump spindle and bearing
B—Fan belt pulley
C—Bearing location bolt and washer
D—Water pump body
E—Dimension, .025 in. (0,63 mm)
F—Carbon ring and seal assembly
G—Carbon seal faced toward impeller
H—Support here when fitting impeller
J—Support here when fitting hub
K—Fan hub
L—Impeller
M—Dimension, 1.820 in. (46,2 mm)
N—Dimension, 3.820 in. (97,0 mm)

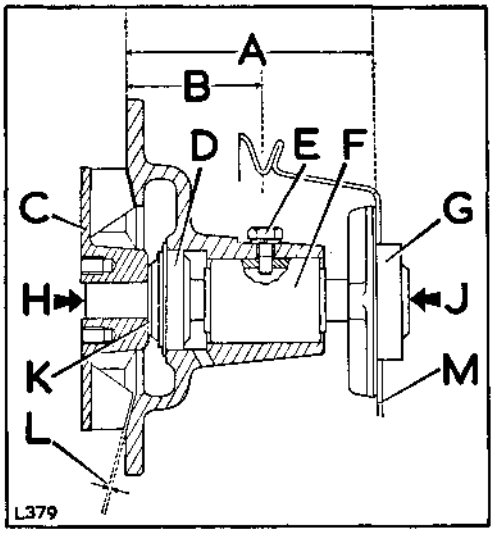


**Fig. K1-8. Cross-section of water pump, 2½ litre models**

A—Dimension, 3.510 in. (89,15 mm)
B—Dimension, 1.930 in. (49,0 mm)
C—Impeller
D—Carbon ring and seal assembly
E—Locating bolt
F—Pump spindle and bearing assembly
G—Fan hub
H—Support here when fitting hub
J—Support here when fitting impeller
K—Carbon seal faced toward impeller
L—Dimension, .025 in. (0,63 mm)
M—Fan belt pulley

## Operation K1-2—*continued*

**To assemble**

1. Insert a few drops of thick oil in the location hole in the bearing.
2. Suitably mark the spindle bearing housing and the pump body so that the bearing locating screw holes may be easily aligned during assembly.
3. Fit the spindle and bearing to the pump body and fit the locating screw.
4. Press the fan pulley hub on to the spindle to a set dimension (see Figs. K1-7 and K1-8) measured between the front face of the pulley hub and the mounting face of the water pump casing. When pressing on the hub, support the spindle to avoid load falling on the bearing location bolt.
5. Fit the carbon ring and seal into the bore of the pump body with the carbon ring to the rear.
6. Press the impeller on to the spindle until there is .025 in. (0,63 mm) clearance between the impeller vanes and the pump body face. Check the dimension using feeler gauges. The impeller must be a press fit on the spindle. If the impeller is loose on the spindle, replace either part as necessary.

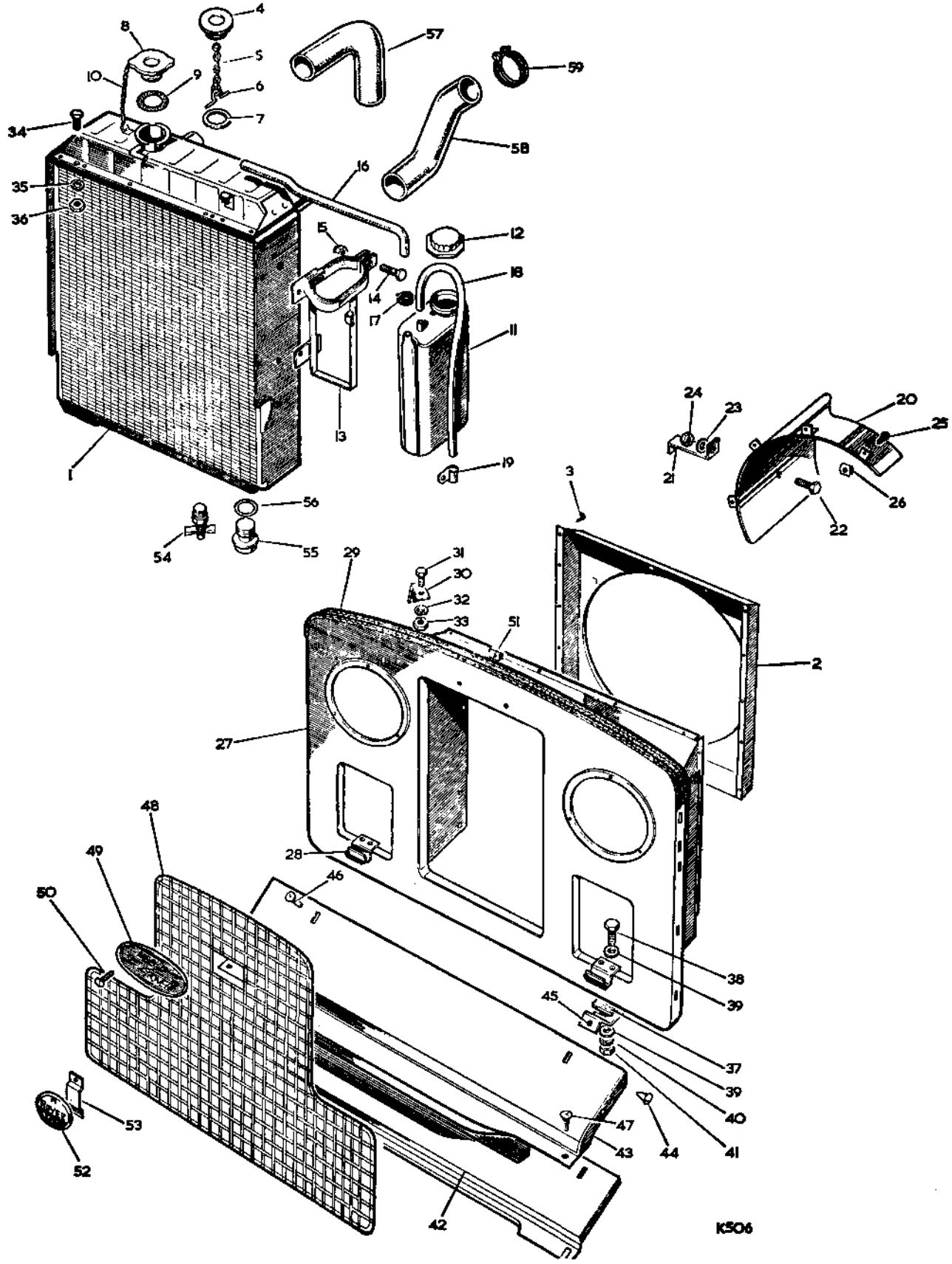


**Fig. K1-9. Layout of radiator and grille panel**

**Key to Fig. K1-9. Layout of radiator and grille panel**

1 Radiator block assembly
2 Fan cowl
3 Drive screw for cowl
4 Filler cap
5 Filler cap chain
6 Retainer for chain
7 Filler cap joint washer
8 Filler cap with overflow bottle provision
9 Joint washer
10 Chain for filler cap
11 Overflow bottle for radiator
12 Cap for overflow bottle
13 Carrier bracket for overflow bottle
14 Bolt ($\frac{1}{4}$ in. UNF x $\frac{7}{8}$ in. long) } Clamping bottle to carrier
15 Self-locking nut ($\frac{1}{4}$ in. UNF) }
16 Hose, radiator to overflow bottle
17 Clip, fixing hose
18 Flexible pipe, overflow bottle outlet
19 Clip, fixing outlet pipe
20 Shroud for fan cowl
21 Steady strip for shroud
22 Bolt ($\frac{1}{4}$ in. UNF x $\frac{5}{8}$ in. long) } Fixing steady strip to shroud
23 Spring washer }
24 } Shroud fixings
25 }
26 }
27 Radiator grille panel complete
28 Support clip for grille mesh
29 Bonnet rest strip, 35 in. long
30 Protection plate for headlamp
31 Bolt ($\frac{1}{4}$ in. UNF x $\frac{5}{8}$ in. long) } Fixing plate to grille panel
32 Spring washer }
33 Nut ($\frac{1}{4}$ in. UNF) }
34 Bolt ($\frac{1}{4}$ in. UNF x $\frac{5}{8}$ in. long) } Fixing radiator block to grille panel
35 Spring washer }
36 Nut ($\frac{1}{4}$ in. UNF) }
37 Rubber buffer } Fixing grille panel and front apron bracket to chassis frame
38 Bolt ($\frac{5}{16}$ in. UNF x $1\frac{1}{2}$ in. long) }
39 Plain washer }
40 Spring washer }
41 Nut ($\frac{5}{16}$ in. UNF) }
42 Front apron panel } Alternatives
43 Front apron panel }
44 Rubber buffer for front apron panel
45 Securing bracket for panel
46 Fixings, apron panel to brackets
47 Fixings, apron panel to chassis
48 Grille for radiator
49 'Land-Rover' nameplate
50 Drive screw } Fixing nameplate and grille to grille panel
51 Spire nut }
52 'Diesel' badge, where applicable
53 Fixing bracket for badge
Rivet } Fixing bracket and badge to grille
Lockwasher }
54 Drain tap for radiator
55 Drain plug for radiator
56 Joint washer for plug
57 Hose for radiator, top
58 Hose for radiator, bottom
59 Radiator hose clips

## Radiator, to replace—Operation K1-3

Workshop hand tools:
Spanner sizes: $\frac{7}{16}$ in. x $\frac{1}{2}$ in. AF open ended (2 off), 2 BA open ended
Screwdriver (medium), Pliers

### General

1. **Cleaning radiator, externally**

   In the event of the cooling gills of the radiator becoming blocked with dirt, straw, etc., they should be cleaned by means of compressed air or water pressure applied from the rear, so forcing the foreign matter out through the front of the radiator. Never use a metal implement for this purpose or serious damage may result to the radiator core.

2. **Internal protection**

   A sealing pellet, Rover Part No. 601314, may be added to the radiator on earlier models as a protection for the cooling system. Land-Rover models produced after 1st August 1966 have the sealing pellet already added. A bottled version of the pellet and full technical details are obtainable from Messrs. Barrs Motor Products Ltd., 73 Scrubs Lane, London W2, England.

3. **Radiator overhaul**

   Repair is by replacement of the complete radiator block assembly. To replace a radiator, proceed as follows:

### To remove

1. Remove the radiator and grille panel complete. Section A.
2. Remove the fixings and detach the radiator block from the grille panel, Fig. K1-9 refers.
3. Remove the drain tap and joint washer from the base of the radiator block.
4. Remove the radiator cap from the radiator filler neck.

### To refit

1. Reverse the removal procedure

## Cooling system, to check—Operation K1-4

The AC pressure cap and cooling system tester (obtainable from AC Delco Division of General Motors Ltd., Dunstable, Bedfordshire, England) can be used to carry out the following cooling system checks. The equipment is complete with the necessary adaptors.

### Pressure cap
### Calibration test

Fit cap to tester, then pump up pressure as far as possible. If pressure release is not within the limits marked on the dial, the cap is fatigued and should be replaced.

### Leak test

If the cap will not hold pressure for a minimum of 10 seconds it indicates a leaking seal or valve and the cap should be replaced.

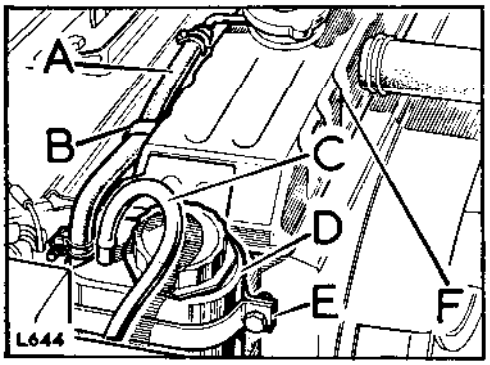


**Fig. K1-10. Semi-sealed system with overflow bottle**

A—Overflow hose
B—Retaining clip
C—Vent hose
D—Overflow bottle
E—Clamp bracket
F—Radiator

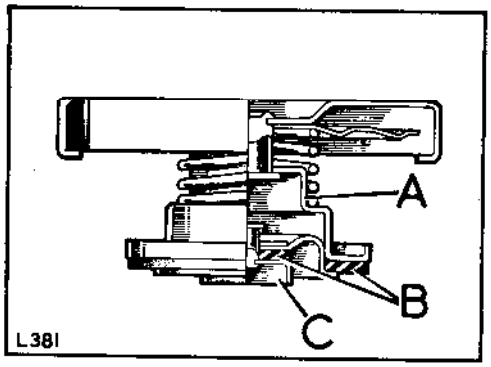


**Fig. K1-11. Cross-section view of early type radiator cap**

A—Pressure relief valve
B—Sealing washers
C—Depression valve

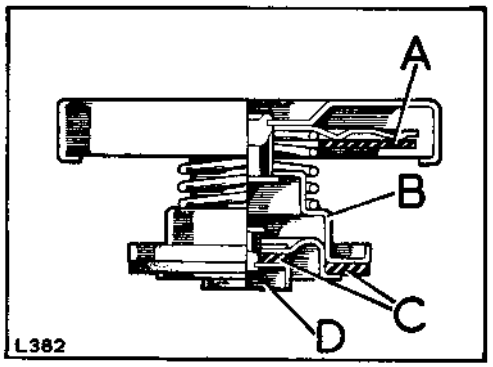


**Fig. K1-12. Cross-section view of later type (semi-sealed) radiator cap**

A—Additional sealing washer
B—Pressure relief valve
C—Sealing washers
D—Depression valve

**Note:** Radiator caps for 10 lb/sq in. (0,7 kg/cm²) pressure systems are not interchangeable with caps for 9 lb/sq in. (0,6 kg/cm²) systems. The appropriate figure is marked on the cap. Also, caps from semi-sealed coolant systems (used in conjunction with a coolant overflow bottle) are not interchangeable with the cap used on systems which vent to atmosphere.

### Cooling system
### External leak test

Remove pressure cap and fit the tester to the radiator. By pumping up the pressure to the poundage indicated on the cap, near actual running conditions can be simulated. If the pressure drops, check all seals and joints for leaks—any leaks will be apparent because the pressure forces the coolant to seep out of any leakage points.

Absence of external leaks may indicate that internal leaks are present.

### Blown cylinder head gasket test

Care must be exercised in this test to ensure that the cooling system pressure does not exceed that marked on the cap.

Attach tester to radiator and apply pressure. Start engine and set at a slow tick-over—a blown cylinder head gasket will now show itself by fluctuations in pressure on the tester gauge.

## COOLING SYSTEM DATA

### Capacity of cooling system

| | |
|---|---|
| 2¼ litre Diesel | 17.5 Imperial pints (10,0 litres) |
| 2¼ litre Petrol | 18 Imperial pints (10,25 litres) |
| 2.6 litre Petrol | 20 Imperial pints (11,2 litres) |

### Radiator

| | |
|---|---|
| Filler cap pressure valve opening pressure: | |
| Early models | 10 lb/sq in. (0,7 kg/cm²), cap marked with figure 10 |
| Later models | 9 lb/sq in. (0,6 kg/cm²), cap marked with figure 9. Not interchangeable with 10 lb/sq in. (0,7 kg/cm²) |
| Filler cap vacuum valve opening pressure | 1 lb/sq in. (0,07 kg/cm²) |

### Thermostat

**Bellows type,** alcohol filled—applicable to early 2¼ litre Petrol and 2¼ litre Diesel engines

| | |
|---|---|
| Opening temperature | 161°F to 168°F (71.7°C to 75.6°C) |
| Fully open at | 185°F (85°C) |

**Wax filled type**—applicable to 2.6 litre Petrol and later 2¼ litre Petrol and 2¼ litre Diesel engines

| | |
|---|---|
| 2.6 litre engines: | |
| Opening temperature | 161°F to 170°F (71.7°C to 76.7°C) |
| Fully open at | 190°F (87.8°C) |
| 2¼ litre engines: | |
| Opening temperature | 159°F to 167°F (70.6°C to 75°C) |
| Fully open at | 185°F (85°C) |

### Water pump

| | |
|---|---|
| Type | Centrifugal |
| Drive | 'V' belt |
| Bearing | Double row ball, sealed on spindle |
| By-pass type: | |
| 2¼ litre models | External |
| 2.6 litre models | Internal |
| Dimensions between front face of pulley hub and mounting face of pump body: | |
| 2¼ litre models | 3.513 in. (89,15 mm) |
| 2.6 litre models | 3.819 in. (97,0 mm) |
| Clearance between impeller vanes and pump body, all models | .025 in. (0,63 mm) |

## Fault diagnosis—Cooling system

| Symptom | Possible cause | Investigation | Remedy |
|---|---|---|---|
| **A—External leakage** | Leakage at hoses and joint faces | Check for loose hose fixings, defective hoses and for leaks at component joint washer | Rectify or replace as necessary |
| | Water pump seals ineffective | Check for worn and damaged seals. Check mating components for undue wear | Overhaul and replace worn parts as necessary |
| | Leakage at core plugs | Check for loose plugs | Tighten or replace as necessary |
| | Damaged radiator seams | Ensure that leakage is from radiator block and not from external connections, drain tap or filler cap | Replace a damaged radiator complete |
| **B—Internal leakage** | Defective cylinder head gasket | Check gasket sealing areas for signs of leakage and for damage | Replace gasket. Check engine oil for water contamination, flush and refill as necessary |
| | Loose cylinder head bolts | Check tightness of fixings using a torque spanner set to correct loading, Section A refers | Retighten in correct sequence to the correct torque loading, Section A refers.<br>Check engine oil for water contamination, flush and refill as necessary |
| | Cracked cylinder bore | Dismantle and examine | Replace cylinder block |
| **C—Water loss** | Overfilling system | Refer to Owner's Instruction Manual for filling instructions | |
| | Boiling off | Ascertain the cause of engine overheating | Rectify as necessary |
| | Internal or external leakage | Refer to paragraphs A and B for checks and remedy | |
| | Restricted radiator or inoperative thermostat | Flush radiator. Check thermostat function | Replace as necessary |
| | Empty overflow bottle, where fitted | Check if water level in bottle is below end of header tank overflow tube | Replenish coolant until end of tube is fully immersed |
| | Radiator filler cap or sealing washer defective | Examine sealing washer for defects. Test radiator cap for sealing off | Replace components as necessary |
| **D—Poor circulation** | Restriction in system | Check hose runs for crimping. Flush radiator | Rectify as necessary |
| | Insufficient coolant | Check coolant level in radiator header tank, Section A | Replenish as necessary |
| | Loose fan belt | Check fan belt tension as described in Section A | Reset belt tension as necessary |
| | Inoperative thermostat | Check thermostat operation, Section K | Replace as necessary |
| | Inoperative water pump | Remove pump and examine, Section A | Replace as necessary |
| **E—Corrosion** | Infrequent flushing and draining | | The cooling system should be drained and flushed at least twice a year |
| | Incorrect anti-freeze mixture | | Use only glycol-based solutions as laid down in Owner's Maintenance Manual |

## Fault diagnosis—Cooling system—*continued*

| Symptom | Possible cause | Investigation | Remedy |
|---|---|---|---|
| **E—Corrosion**—cont | Excessive impurity in water | | Use only clean water, soft if possible (e.g. rainwater) |
| **F—Overheating** | Poor circulation | Refer to paragraph D | |
| | Air locks in system | When refilling the coolant system, always allow a full flow through the coolant drain taps before closing them. Isolate heater, if fitted, before draining system | Clear air lock and replenish |
| | Air flow through radiator obstructed | Check for foreign matter lodged between radiator fins | Remove matter using air pressure applied from engine side of radiator |
| | Engine lubrication system faults | Low oil level | Replenish as necessary |
| | | Dirty oil or sludge in system | Flush and replenish, Section A |
| | Engine settings incorrect | Check fuel distributor pump settings (Diesel)<br>Check ignition timing (Petrol) | Reset as necessary, Section A |
| | | Check valve timing | Reset as necessary, Section A |
| | Exhaust system faults | Check for choked or damaged exhaust pipes and silencer | Rectify or replace as necessary |
| | Braking system faults | Check for dragging brakes, Section H | |
| | Vehicle operating faults | a. Overloading vehicle<br>b. Engine labouring on gradients<br>c. Excessive low gear work<br>d. Excessive engine idling | For these faults the remedy is in the hands of the operator |
| **G—Overcooling** | Defective thermostat | Check thermostat operation | Replace as necessary |
| | Inaccurate temperature gauge (where fitted) | Check by substituting serviceable gauge | Replace as necessary |

# SECTION L — FUEL SYSTEM

# INDEX—FUEL SYSTEM

**Note:** A comprehensive, detailed index is included at the end of this manual


| Description | Operation No. |
|---|---|
| Petrol system—General | Preceding 1 |
| Diesel system—General | Preceding 14 |
| Air cleaner | Section A |
| **CARBURETTER** | |
| Solex | 1 |
| Zenith | 2 |
| Stromberg | 3 |
| SU | 4 |
| **FUEL PUMP** | |
| Lift pump, mechanical | 5 |
| Lift pump, electric | 6–7 |
| Distributor pump, Diesel | 15 also Section A |
| **FUEL TANK** | |
| Side mounted type | 8 |
| Rear mounted type | 9 |
| **FUEL GAUGE UNIT** | |
| With side mounted fuel tank | 10 |
| With rear mounted fuel tank | 11 |
| **FUEL FILTERS** | |
| Petrol system | 12 |
| Diesel system | 15 |
| Fuel pipes and hoses | 13 |
| Priming the fuel system—Diesel | 14 |
| Fuel injectors—Diesel | 16 |
| **FAULT DIAGNOSIS** | At end of Section |
| **DATA** | At end of Section |

# Petrol fuel system—General notes

## Carburetter

There are four types of carburetter in use on the various models in the Land-Rover range. Models fitted with 2¼ litre engines are equipped with either a Solex or Zenith type carburetter, while models fitted with 2.6 litre engines use either a Stromberg or SU type carburetter. Note that the Stromberg type carburetter is manufactured by the Zenith Carburetter Co. Ltd., and carries the manufacturers name, see Fig. L1-1 for identification.

## Fuel pump

Two types of fuel pump are in use, all 2¼ litre models have a mechanically operated pump, secured directly to the right-hand side of the engine and driven from the engine camshaft. All models with 2.6 litre engines have an electrically operated pump, mounted on the chassis, RH side.

## Fuel filter

All models are equipped with a fuel filter, 2¼ litre engines have a combined filter-sedimenter incorporated with the fuel pump. Models fitted with 2.6 litre engines have a fuel filter mounted on the engine side of the right-hand toe box.

## Air cleaner

All details and instructions for air cleaners are included in Section A.

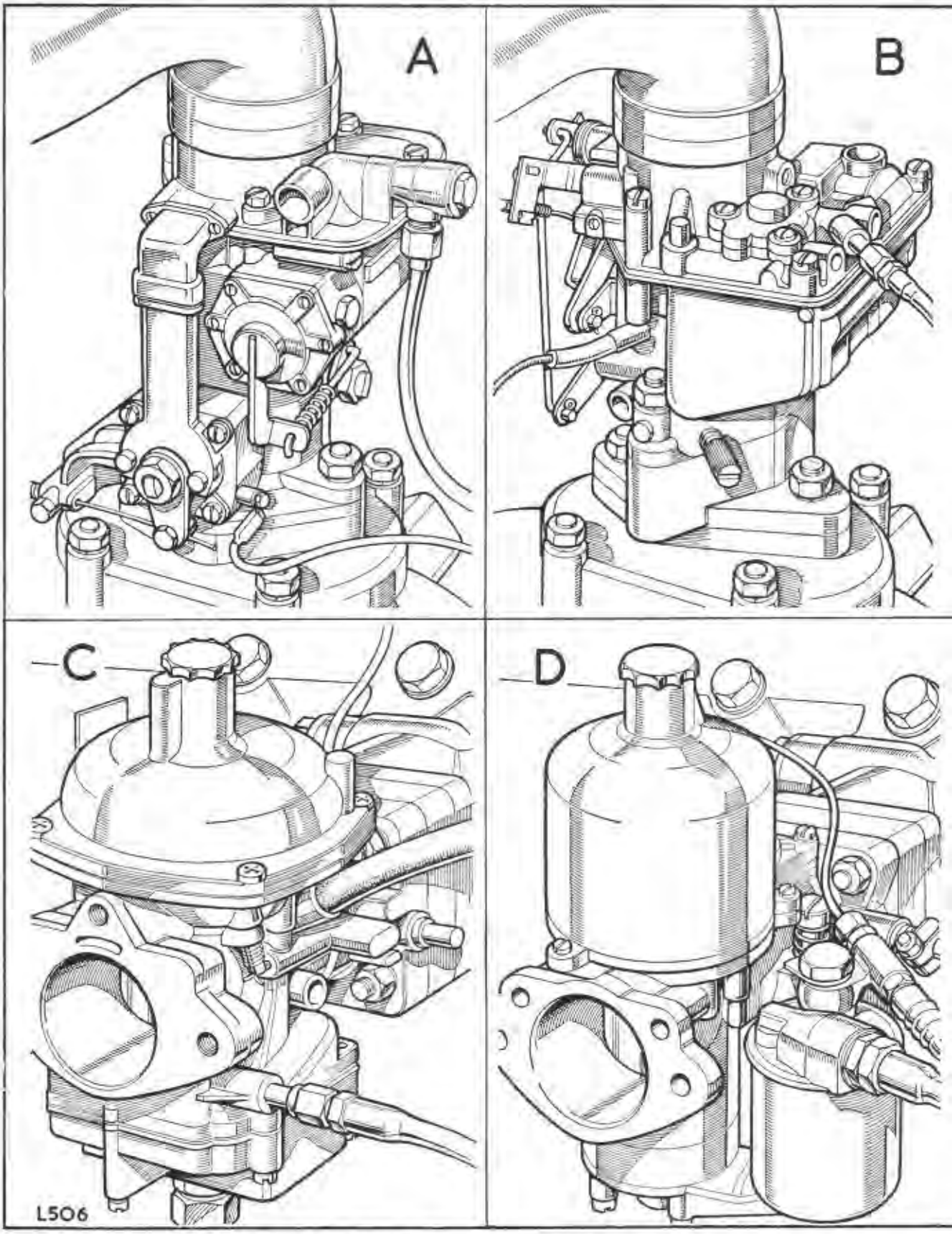


**Fig. L1-1. Carburetter identification**

A—Solex B—Zenith C—Stromberg D—SU

## Solex carburetter, to overhaul—Operation L1-1

*(For removal and refitting instructions, Section A refers)*

Workshop hand tools:
Spanner sizes: $\frac{5}{16}$ in. BSF open end, $\frac{3}{8}$ in. AF ring
Screwdriver (medium)

### General

The following instructions cover both the SX type 40 PA 105/B and the SX type 40 PA 106 with heater element.

### Carburetter, to dismantle

### Top cover, to remove

1. Detach top cover from carburetter body.
2. Detach elbow from top cover with distance piece, if fitted.
3. Unscrew fixtures retaining joint washer to top cover and remove.
4. Unscrew needle valve housing.
5. Remove banjo union, filter gauze, washers and bolt.

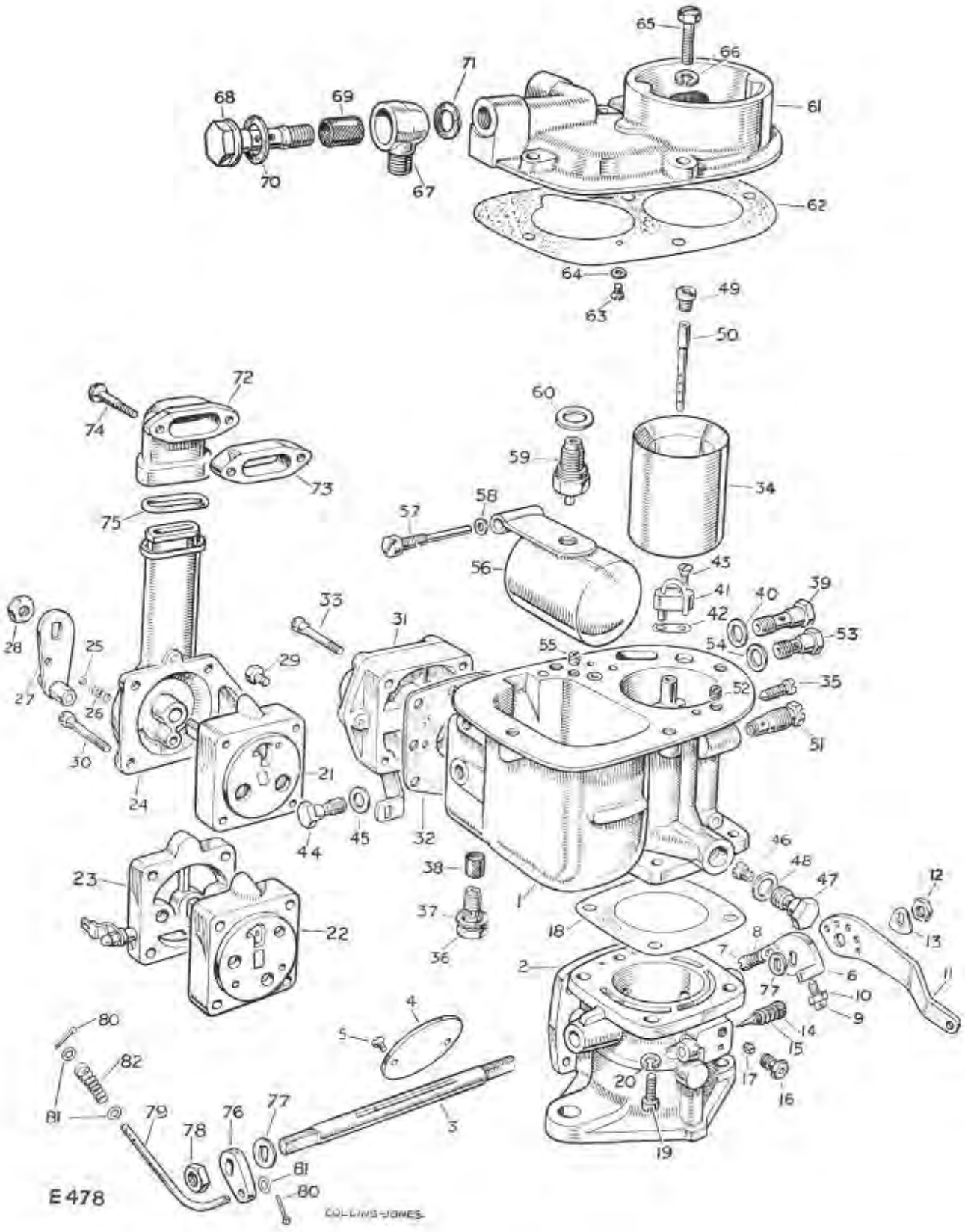


Fig. L1-2. Layout of Solex carburetter

**Key to Fig. L1-2. Layout of Solex carburetter**

1 Carburetter body
2 Throttle chamber
3 Spindle for throttle
4 Butterfly for throttle
5 Special screw fixing butterfly
6 Plate, throttle abutment
7 Special screw } For slow running
8 Spring } adjustment
9 Special screw } For throttle
10 Locknut } stop
11 Throttle lever
12 Nut fixing throttle lever
13 Lock washer for nut
14 Special screw } For mixture
15 Spring } control
16 Screwed union } For suction
17 Olive } pipe
18 Joint washer for throttle chamber
19–20 Fixing chamber to carburetter body
21 Starter body and valve, without starter heater element
22 Starter body and valve complete with starter heater element
23 Heater element for starter
24 Cover for starter
25 Ball } For starter
26 Spring } valve
27 Lever for starter
28 Nut fixing starter lever
29 Special bolt fixing starter cable
30 Special screw fixing starter body
31 Accelerator pump complete
32 Joint washer for pump
33 Special screw fixing pump
34 Choke tube
35 Special screw fixing choke tube
36 Non-return valve
37 Fibre washer for valve
38 Filter gauze for non-return valve
39 Jet, accelerator pump
40 Fibre washer for jet
41 Pump injector
42 Joint washer for pump injector
43 Special screw fixing injector
44 Economy jet (blank)
45 Joint washer for blank jet
46 Main jet
47 Main jet carrier
48 Fibre washer for carrier
49 Correction jet
50 Emulsion tube
51 Pilot jet
52 Jet air bleed
53 Starter jet, petrol
54 Fibre washer for jet
55 Economy jet
56 Float
57 Spindle for float
58 Copper washer for spindle
59 Needle valve complete
60 Fibre washer for valve
61 Top cover for carburetter
62 Joint washer for top cover
63–64 Fixings—joint washer to top cover
65–66 Fixings—top cover to body
67 Banjo union
68 Special bolt for union
69 Filter gauze for union
70 Fibre washer, large
71 Fibre washer, small
72 Elbow for top cover
73 Distance piece, elbow to top cover
74 Screw fixing elbow to top cover
75 Rubber sealing washer, elbow to starter cover
76 Lever for accelerator pump rod
77 Special washer for lever
78 Nut fixing lever to spindle
79 Control rod for accelerator pump
80 Split pin } For control rod
81 Plain washer } For control rod
82 Spring } For control rod

## Operation L1-1—*continued*

### Throttle chamber, to remove

6. Disconnect control rod for accelerator pump, inserting split pin back into its correct location.

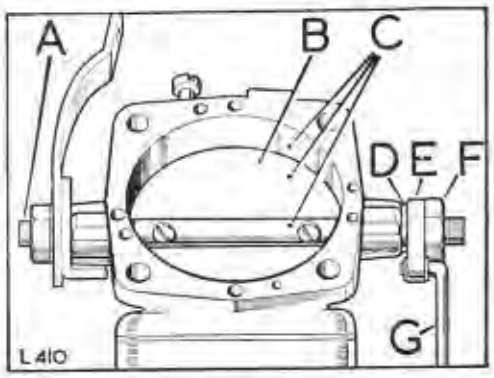


**Fig. L1-3. Control rod for accelerator pump and throttle butterfly**

A—Spindle for throttle
B—Butterfly for throttle
C—Markings inserted as required
D—Special washer for lever
E—Lever for accelerator pump
F—Nut fixing lever to spindle
G—Control rod for accelerator pump

7. Unscrew volume control screw.
8. Detach throttle chamber from carburetter body.
9. Remove gasket from top of throttle chamber.
10. Mark up throttle butterfly as illustrated and remove butterfly.
11. Withdraw throttle spindle.
12. Remove starter assembly from throttle chamber.
13. Remove starter lever, locating ball and spring.
14. Withdraw starter cover and remove rubber sealing washer.
15. Unclip circlip from starter valve assembly and withdraw heating element assembly if fitted.
16. Withdraw starter valve assemly from starter body.

### Carburetter body, to strip

17. Remove bolt retaining float and withdraw float.
18. Remove pump injector.
19. Withdraw choke tube.
20. Remove air connection jet and emulsion tube.
21. Remove economy jet, pilot jet, accelerator pump jet and starter jet.
22. Remove main jet holder and main jet, then non-return valve with filter.

### Accelerator pump, to remove

23. Detach accelerator pump from carburetter body and gasket.
24. Remove pump cover assembly.
25. Withdraw pump membrane assembly and pump spring.
26. Twist and withdraw economy valve spring and washer.

## Operation L1-1—*continued*

### Inspection and cleaning

### Special notes

1. **Carburetter cleaning.**
   When cleaning fuel passages do not use metal tools (files, scrapers, drills, etc.) which could cause dimensional changes in the drillings or jets. Cleaning should be effected using clean fuel and where necessary a moisture-free air blast.
2. **Joint faces.**
   Examine the faces for deep scores which could lead to leakage taking place when assembled, check with straight edge for signs of bow.
3. **Joint gaskets and seals.**
   New gaskets and seals should be used throughout carburetter rebuild. A complete set of gaskets is available for replacement purposes.
4. Examine throttle spindle bushes for wear, if oval or badly worn renew carburetter body.
5. Examine float for puncture or damage and chamber for corrosion, retaining clips for wear.
6. Examine cold start bushes for wear, renew as necessary.
7. Examine accelerator device diaphragm for deterioration and damage, renew.
8. Examine volume control screw for wear and damage.
9. Examine all linkages for wear and lost motion very closely, renew as necessary.

### Carburetter, to rebuild

### Accelerator pump, to rebuild

1. Fit the economy valve spring and washer to the pump body, turning the economy valve through 90° to secure washer as illustrated.

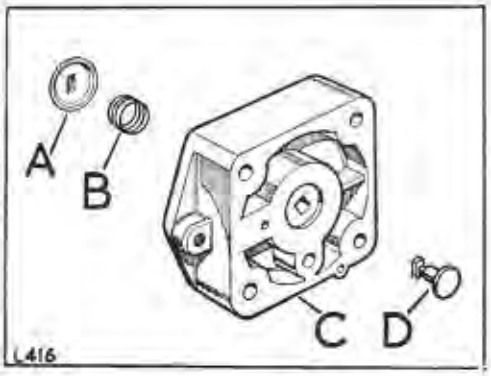


**Fig. L1-4. Pump body assembly**

A—Economy valve washer
B—Economy valve spring
C—Pump body
D—Economy valve

2. Insert pump spring into body, then place pump membrane into pump cover and secure pump body and pump cover together.
3. Fit pump body gasket to pump body on location peg, then secure accelerator pump to carburetter body as illustration.
4. Fit main jet to main jet holder and fit with washer to carburetter body.

## Operation L1-1—*continued*

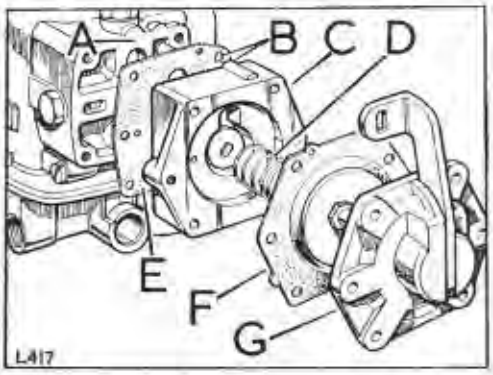


**Fig. L1-5. Accelerator pump assembly**

A—Carburetter body
B—Location peg and hole for pump body to gasket
C—Pump body
D—Pump spring
E—Pump body gasket
F—Pump membrane assembly
G—Top pump cover

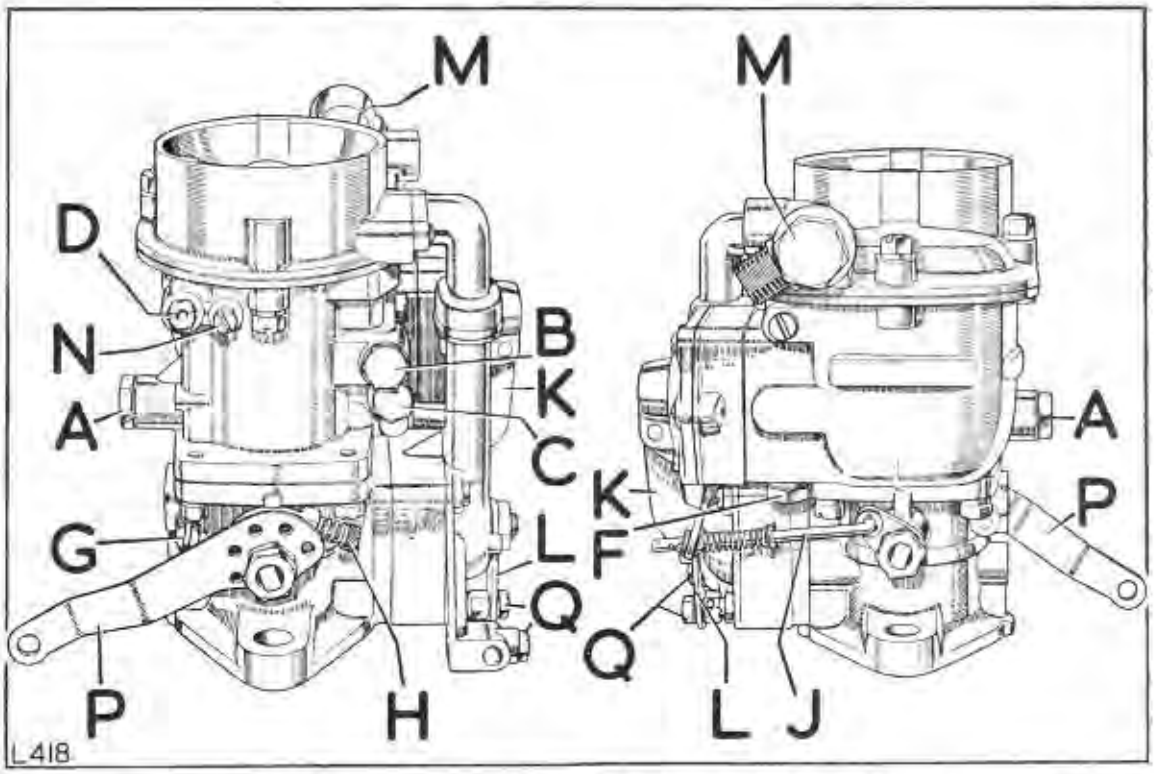


**Fig. L1-6. Carburetter jets and controls, without starter heater element**

A—Main jet
B—Accelerator pump jet
C—Starter jet, petrol
D—Pilot jet
F—Non-return valve
G—Mixture control
H—Slow running adjustment
J—Pump operating rod
K—Pump operating lever
L—Lever for starter
M—Banjo union
N—Special screw fixing choke tube
P—Throttle lever
Q—Cold start cable clamping bolts

## Operation L1-1—*continued*

5. Fit pilot jet, accelerator pump jet and starter jet to the illustrated position.
6. Fit the non-return valve and filter to position illustrated.
7. Fit economy petrol jet to its respective position.
8. Fit choke tube, large inside diameter at bottom, then secure.
9. Fit pump injector and washer into carburetter and secure.
10. Insert emulsion tube into its retainer, followed by the air correction jet.
11. Locate float into chamber and retain with spindle.

**Starter assembly, to rebuild**

12. Fit rubber sealing washer to starter top cover.
13. Insert starter valve into starter body and fit retaining clip.
14. If applicable fit heater element on to starter body as shown.
15. Place starter top cover on starter body over locator, ensuring that valve orifices will allgn with throttle chamber when assembled. Fit spring and ball in location then retain with starter lever and secure.
16. Secure starter assembly to throttle chamber

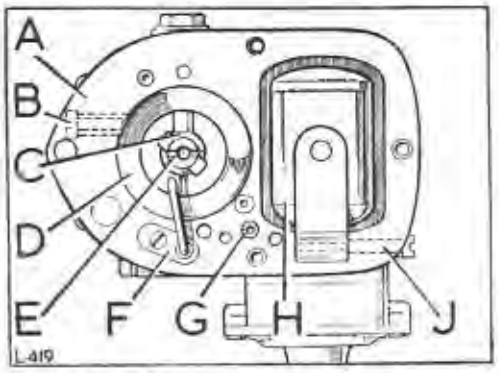


**Fig. L1-7. Carburetter top face**

A—Carburetter body
B—Choke tube retaining screw
C—Emulsion tube
D—Choke tube
E—Air correction jet
F—Pump injector
G—Economy petrol jet
H—Float
J—Float spindle

## Operation L1-1—*continued*

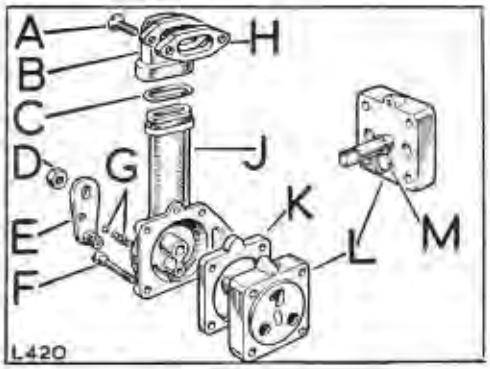


**Fig. L1-8. Starter assembly**

A—Screw for elbow
B—Elbow
C—Rubber sealing washer
D—Nut fixing starter lever
E—Lever for starter
F—Screw fixing starter body
G—Ball and spring for starter valve
H—Distance piece for elbow
J—Starter top cover
K—Heater element for starter
L—Starter body
M—Locator

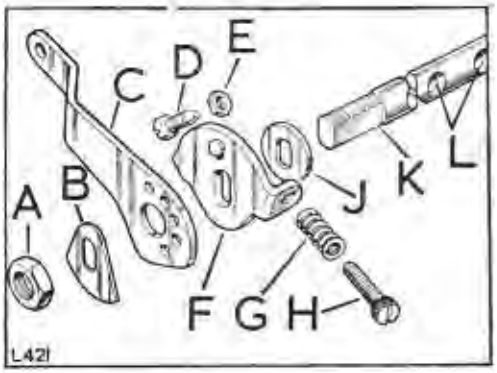


**Fig. L1-9. Throttle linkage assembly**

A—Spindle nut
B—Spindle nut tab washer
C—Throttle lever
D—Screw } Throttle
E—Nut } stop
F—Abutment plate
G—Spring } Slow
H—Screw } running
K—Throttle spindle
L—Countersunk screw holder
J—Special washer

### Throttle chamber, to rebuild

17. To assemble throttle linkage, fit throttle spindle abutment plate to spindle, followed by throttle lever and locate on peg. Fit throttle spindle tab washer and nut then secure and lock tab washer as illustrated.

18. Insert throttle spindle into throttle chamber as illustration, then fit throttle butterfly, ensuring chamfered edges mate with chamber wall. Operate throttle butterfly to centralise, then secure and pin-punch screws to prevent rotation.

19. Fit accelerator lever as illustrated, to throttle spindle.

20. Fit throttle chamber gasket, ensuring that it aligns with the holes in carburetter body, then secure carburetter body to throttle chamber, first ensuring that accelerator rod is fitted to pump lever with its spring and split pin.

21. Fit mixture control screw, but do not tighten, then unscrew one and a half turns.

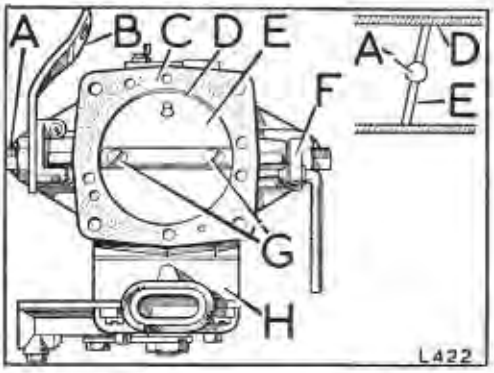


**Fig. L1-10. Throttle chamber with butterfly assembly**

A—Throttle spindle
B—Throttle lever
C—Throttle chamber gasket
D—Throttle chamber
E—Throttle butterfly
F—Accelerator lever
G—Throttle fixing screws
H—Starter assembly

## Operation L1-1—*continued*

### Carburetter top cover, to rebuild

22. Fit washer on to needle valve and fit assembly into top cover, then test for satisfactory operation.
23. Fit gasket to top cover then secure in place.
24. Assemble banjo union as illustrated and loosely fit to top cover at this stage.
25. Fit elbow for top cover to top cover and secure. If a heater element is fitted to carburetter a distance piece also requires fitting with elbow.
26. Secure top cover to carburetter body.

### Accelerator pump operating rod, to adjust

27. Remove the split pin behind the spring and allow the spring to move back along the rod.
28. Slacken the slow running screw right off.
29. With the throttle fully closed and the operating lever just about to operate the pump diaphragm, add washer/s on the end of the rod up to the nearest split pin hole, ensuring that there remains .020 in. (0,5 mm) clearance between the lever and the first washer when the outer split pin is fitted. This clearance ensures that there is no lost movement of the lever travel.
30. Compress the spring and replace the inner split pin.
31. Check that the spring is not coilbound when the throttle is fully open.

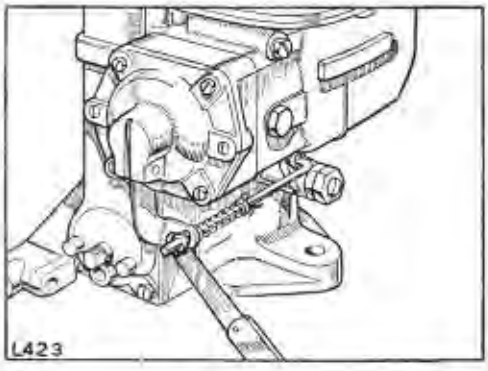


**Fig. L1-11. Setting accelerator pump operating rod**

### Carburetter, to adjust

1. Set mixture control screw one and a half turns from full in position. **DO NOT** overtighten mixture control screw or the fine taper may be damaged.
2. Screw in the slow running screw one complete turn after contacting abutment on throttle chamber.
3. Operate accelerator pedal to ensure that linkage does not stick and throttle lever at carburetter has full travel.
4. Start engine and run until normal operating temperature is attained.
5. Adjust mixture control screw until engine runs smoothly and evenly.
6. Adjust slow running screw to give engine idling speed of 500 rpm.
7. Snap throttle open and shut to ensure that engine does not stall. If stalling occurs, slightly increase slow running speed.

**Note:** It may be necessary to alternate slight adjustments between mixture and slow running screws to obtain satisfactory results.

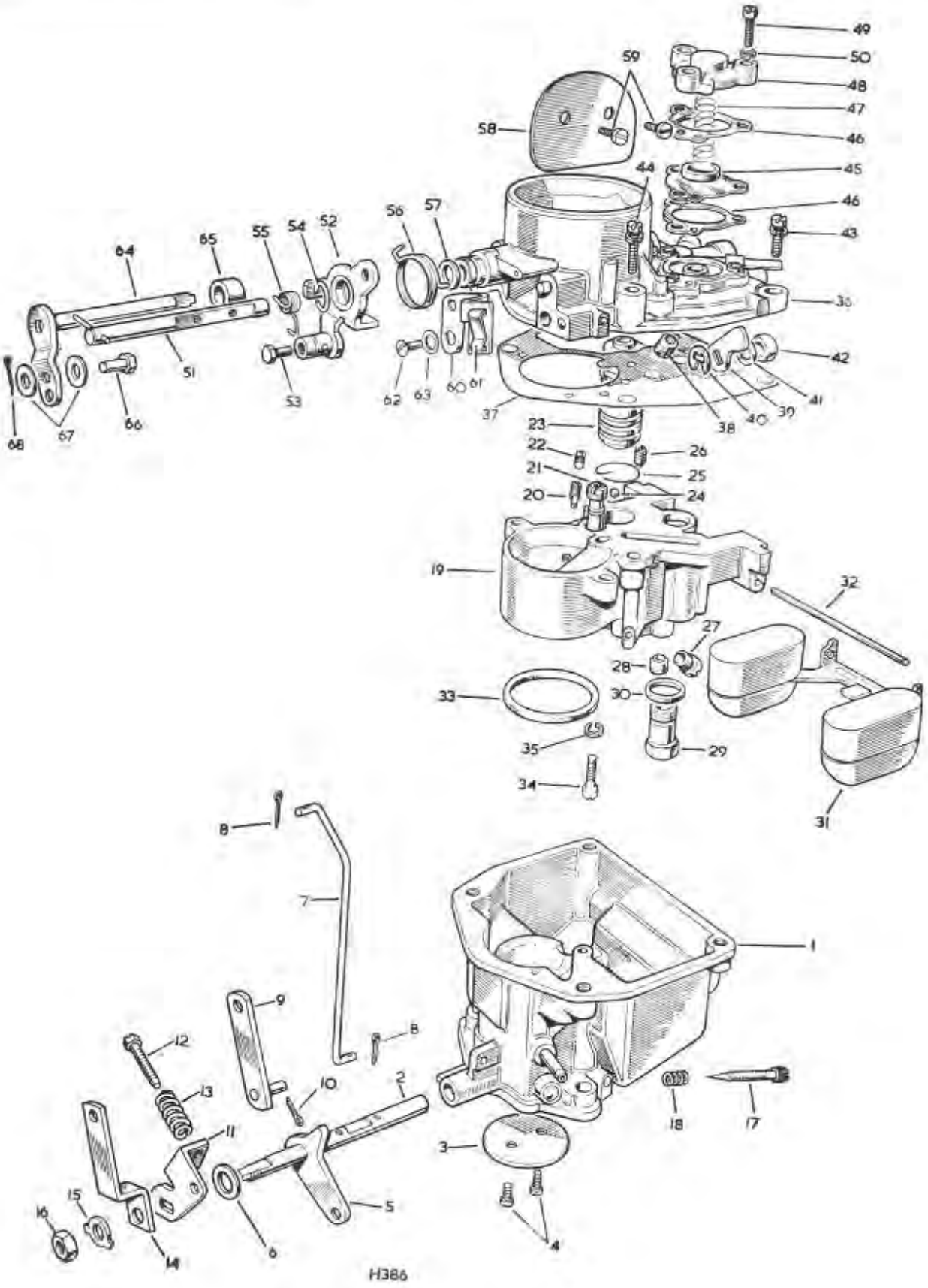


Fig. L1-12. Layout of Zenith carburetter

**Key to illustration of Zenith carburetter**

1 Carburetter main body
2 Throttle spindle
3 Butterfly for throttle
4 Special screw fixing butterfly
5 Floating lever on throttle spindle
6 Plain washer on spindle for floating lever
7 Interconnecting link, throttle to choke
8 Split pin fixing link to levers
9 Relay lever, throttle to accelerator pump
10 Split pin fixing relay lever to floating lever
11 Throttle stop and fast idle lever
12 Special screw } For throttle stop
13 Spring }
14 Throttle lever
15 Lock washer } Fixing throttle levers
16 Special nut }
17 Volume control screw
18 Spring for control screw
19 Emulsion block
20 Pump jet
21 Pump discharge valve
22 Plug for pump jet
23 Piston for accelerator pump
24 Ball for piston
25 Circlip for piston
26 Slow running jet
27 Main jet
28 Enrichment jet
29 Needle valve
30 Special washer (2 mm)
31 Float
32 Spindle for float
33 'O' ring, emulsion block to body
34 Special screw } Fixing emulsion block to body
35 Spring washer }
36 Top cover for carburetter
37 Gasket for top cover
38 Ventilation screw (3.0) for choke
39 Pump lever, internal
40 Retaining ring for pump lever
41 Shakeproof washer } Fixing pump lever
42 Special nut }
43 Screw and spring washer, short } Fixing top cover to main body
44 Screw and spring washer, long }
45 Diaphragm for carburetter
46 Gasket for diaphragm
47 Spring for diaphragm
48 Cover for diaphragm
49 Screw } Fixing diaphragm cover
50 Spring washer }
51 Spindle and pin for choke lever
52 Lever and swivel for choke
53 Screw for choke lever swivel
54 Circlip fixing choke lever to top cover
55 Spring, small } For choke lever
56 Spring, large }
57 Plain washer for choke spindle
58 Butterfly for choke
59 Special screw fixing butterfly
60 Bracket and clip for choke cable
61 Clip for choke bracket
62 Special screw } Fixing choke bracket to top cover
63 Shakeproof washer }
64 Spindle and lever for accelerator pump
65 Spacing washer for pump spindle
66 Pin } Fixing relay lever to pump lever
67 Plain washer }
68 Split pin }

## Zenith carburetter, to overhaul—Operation L1-2

*(For removal and refitting instructions, Section A refers)*

Workshop hand tools:
Spanner size: $\frac{7}{16}$ in. AF
Screwdriver (small)

### Carburetter, to dismantle

#### Linkages, to remove

1. Disconnect the interconnecting link.
2. Disconnect accelerator pump spindle lever from throttle relay lever.

#### Top cover and emulsion block, to separate

3. Detach top cover from carburetter body.
4. Remove float assembly.
5. Remove needle valve housing and needle.
6. Detach emulsion block from carburetter top cover, taking care not to drop the accelerator pump assembly which is now freed.
7. Remove gasket from top cover.

#### Emulsion block, to dismantle

8. Lift out accelerator pump piston.
9. Remove all jets in emulsion block.

   **Note:** At the base of the accelerator pump housing bore is a ball inlet valve retained by a circlip, there is no need to remove it.

#### Carburetter body, dismantling

10. Remove idling volume control screw.
11. Detach adaptor from carburetter body.
12. Mark up (see Fig. L1-19) then remove throttle butterfly disc followed by throttle spindle and linkage if required.
13. Remove the 'O' ring seal from choke venturi tube.

#### Carburetter top cover

14. Strip down economy valve assembly, taking care not to loose diaphragm spring.
15. Remove, if required, the choke butterfly after marking up. Followed by the choke spindle, taking care to retain the thin washer.
16. Remove spindle and lever for accelerator pump.
17. Remove ventilation screw for choke.

### Inspection and cleaning

#### Special notes

1. **Carburetter cleaning**

   When cleaning fuel passages do not use metal tools (files, scrapers, drills, etc.) which could cause dimensional changes in the drillings or jets. Cleaning should be effected using clean fuel and where necessary a moisture-free air blast.

2. **Joint faces.**

   If the joint faces on the emulsion block, top cover or carburetter body show any signs of distortion or the edges are burred, these faces may be reclaimed by flatting, using fine grade abrasive cloth and a surface plate. Examine the faces for deep scores which would lead to leakage taking place when assembled.

3. **Joint gasket and seals.**

   New gaskets and seals should be used throughout carburetter rebuild. A complete set of gaskets is available for replacement purposes.

4. Examine throttle spindle bushes for wear, if oval or badly worn renew carburetter body.
5. Examine the tapered end of the idling volume screw for wear and damage, renew as required.

### Carburetter, to rebuild

#### Carburetter top cover, rebuild

1. If previously dismantled, insert the choke spindle into its housing and at the same time refit the thin washer. Locate the choke butterfly on the spindle and loosely retain with the two special screws. Operate the butterfly to centralise it on the spindle, then secure the screws and lock them by peening. Engage the spring end on to the choke swivel lever.
2. Fit the economy valve gasket, diaphragm assembly and a further gasket to the top cover upper face, aligning the holes in the gaskets and diaphragm with the drilling in the top cover face.
3. Locate the spring in the seating on the diaphragm assembly, locate the valve cover spigot on the spring free end and align the drilling in the cover casting with the hole in the gasket. Push down on the cover, keeping it square to the diaphragm. Then secure.

## Operation L1-2—*continued*

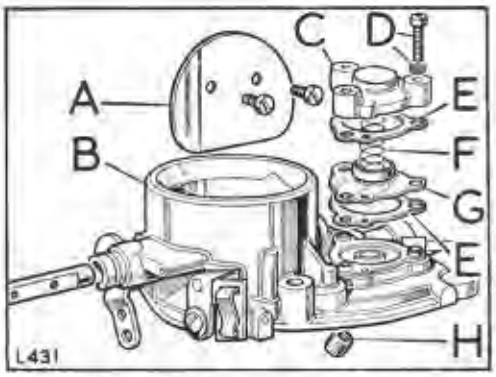


**Fig. L1-13. Carburetter top cover details**

A—Choke butterfly disc
B—Carburetter top cover
C—Economy valve diaphragm cover
D—Diaphragm cover fixings
E—Diaphragm gaskets
F—Diaphragm spring
G—Diaphragm assembly
H—Ventilation jet

4. Fit the ventilation screw to the angled tapping in the top cover lower face.
5. Fit the spindle and lever for accelerator pump as illustrated.

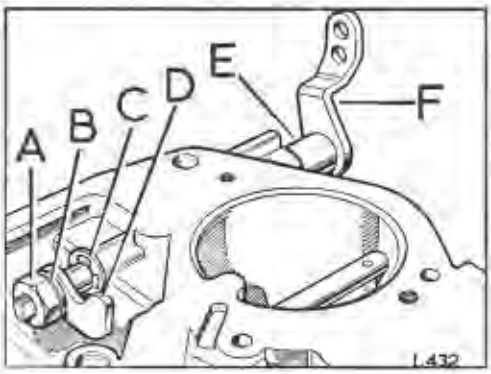


**Fig. L1-14. Accelerator spindle assembly**

A—Securing nut
B—Shakeproof washer
C—Circlip
D—Accelerator pump arm
E—Distance piece oilite bush
F—Spindle and lever for accelerator pump

### Emulsion block, rebuild

6. Fit the blanked off jet and the slow running jet to their respective tappings in the emulsion block upper face, see illustration for positions.
7. Fit the pump jet, followed by the pump jet tapping plug, to the tapping in the side of the emulsion block.
8. Fit the main jet and the enrichment jet to the emulsion block, the enrichment jet into the vertical tapping and the main jet into the angled tapping. The jets are cadmium plated and only plated main and enrichment jets are to be used in this carburetter.

### Fitting emulsion block to carburetter top cover

9. Position the gasket on top cover joint face.
10. Apply a thin smear of clean lubricating oil to the accelerator pump piston and assemble, piston first, into its housing bore in the emulsion block.
11. Ensure that the accelerator pump spindle lever is positioned inboard to align with accelerator pump plunger, position emulsion block and accelerator pump assembly on top cover joint face.

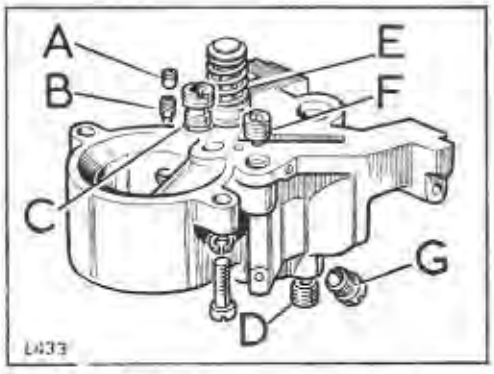


**Fig. L1-15. Emulsion block details**

A—Plug for pump jet tapping
B—Pump jet
C—Blanked off jet
D—Enrichment jet
E—Accelerator pump piston
F—Slow running jet
G—Main jet

## Operation L1-2—*continued*

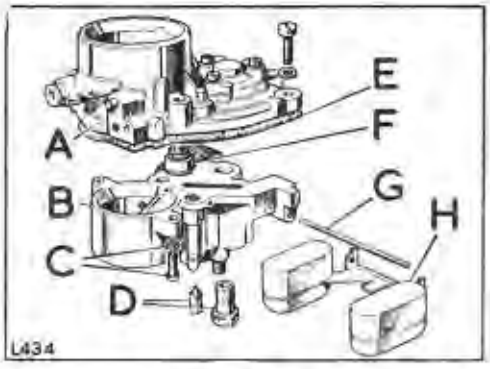


**Fig. L1-16. Key to fitting top cover to emulsion block**

A—Carburetter top cover
B—Emulsion block
C—Emulsion block attachment screws and washers
D—Needle valve and housing
E—Top cover gasket
F—Accelerator pump piston assembly
G—Hinge pin
H—Float assembly

12. Ensure that the sealing washer for the needle valve housing is in good condition and fit the washer.

13. Fit the needle valve housing and the securing screws in the emulsion block. Do not fully tighten at this stage.

14. Check that the fuel passage drillings in the top cover are clear and not masked by misalignment of the gasket. Now fully tighten the emulsion block securing screw and needle housing.

15. Fit the needle valve into its seating in the needle valve housing. Check for leakage past the assembly by holding the needle valve on to its seating and blowing air into fuel inlet pipe.

### Fitting float assembly

16. Position float assembly on to top cover, align pin holes in float carrier and emulsion block flange lugs and secure float carrier with hinge pin.

17. With the needle valve on its seating and the central tongue on the float carrier contacting on the needle valve, measure the distance between the gasket upper face and the highest point on the floats as detailed in the accompanying illustration.

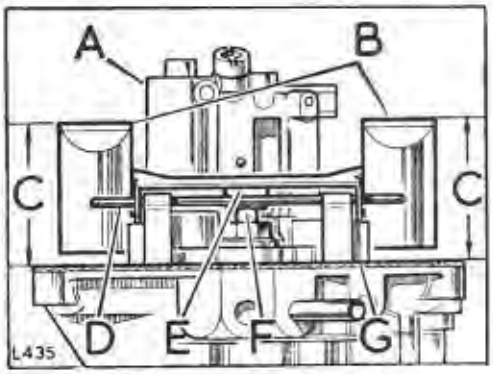


**Fig. L1-17. Checking float setting**

A—Emulsion block
B—Highest points on floats
C—Dimension to be $1\frac{5}{16}$ in. (33 mm)
D—Hinge pin
E—Central tongue on float carrier
F—Needle valve
G—Gasket

18. The dimension required at this check is $1\frac{5}{16}$ in. (33 mm). Any adjustment must be made by deflecting the central tongue which abuts the needle valve; adjustment must not be made by bending the float carrier arms.

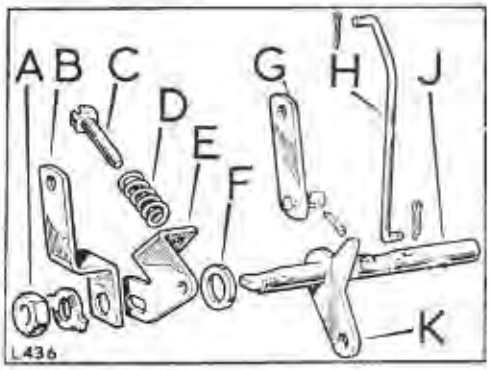


**Fig. L1-18. Throttle linkage assembly**

A—Lockwasher and securing nut
B—Throttle lever
C—Special screw for throttle stop
D—Spring
E—Throttle stop and fast idle lever
F—Plain washer
G—Relay lever
H—Interconnecting link
J—Throttle spindle
K—Floating lever on throttle spindle

## Operation L1-2—*continued*

19. Assemble the throttle linkage to the spindle, insert floating lever, plain washer, throttle stop, throttle lever, lock tab and securing nut as illustrated.

20. Fit throttle spindle assembly to carburetter then insert butterfly into spindle, aligning marks previously made, and loosely retain with the two special screws. Operate the butterfly to centralise it on the spindle, then secure the screws and lock them by peening.

21. Fit carburetter adaptor to carburetter body using a new gasket and tighten evenly.

### Fitting top cover and emulsion block to carburetter body

22. Fit the 'O' ring seal to the seating around the top end of the venturi barrel. Ensure that the 'O' ring is correctly seated, THIS IS VERY IMPORTANT AS POOR JOINTING WOULD CREATE POOR FUEL CONSUMPTION.

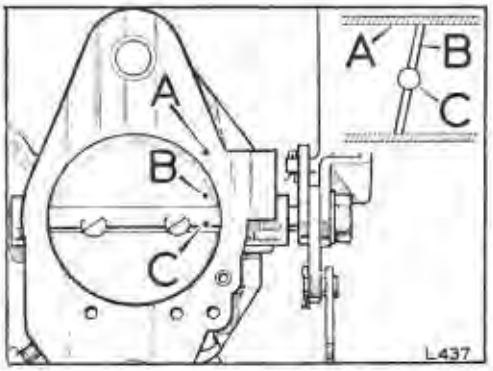


**Fig. L1-19. Butterfly assembly**

A—Carburetter body marking
B—Butterfly marking
C—Spindle marking

23. Offer up the cover and emulsion block assembly to the carburetter body. Check that the 'O' ring seal around the venturi barrel is holding off the emulsion block, indicated by a small gap between the top cover gasket and carburetter body joint faces. This will ensure a compression seal on the 'O' ring when assembled.

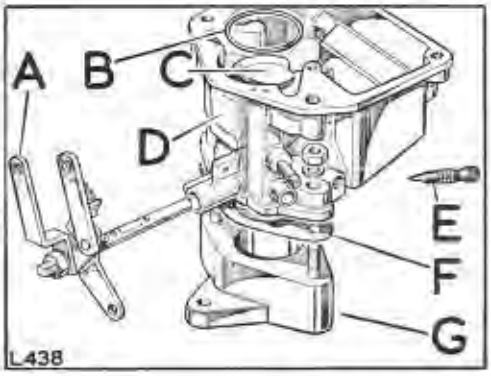


**Fig. L1-20. Carburetter body and adaptor**

A—Throttle control
B—'O' ring seal
C—Venturi barrel
D—Carburetter body
E—Volume control screw
F—Adaptor gasket
G—Adaptor body

24. Secure the assembly, evenly, to carburetter body. Then replace idling volume control screw.

### Carburetter linkage, reconnect

25. Connect the throttle relay lever to the hole furthest from the fulcrum on the accelerator pump spindle lever, using clevis pin, two plain washers and split pin.

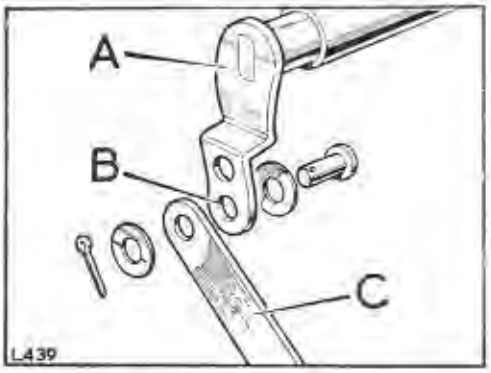


**Fig. L1-21. Throttle relay lever position**

A—Accelerator pump spindle lever
B—Position of accelerator pump hole
C—Throttle relay lever

## Operation L1-2—*continued*

**Note:** In some applications of the basic carburetter, the hole nearest to the fulcrum is for use only in cold seasons to obtain maximum stroke from the accelerator pump.

26. Fit the interconnecting link between choke operating tab and the floating lever on the throttle spindle and secure with split pins.

### Fast-idle interconnection setting

Fully close choke butterfly by actuating choke operating tab. It should be possible to slide a .04 in. diameter (1,25 mm) drill between throttle butterfly edge and the carburetter body. If necessary, bend interconnection link to achieve this condition.

### Carburetter, to set and adjust

Before any attempt is made to set the idling speed, a thorough check should be made to ensure that the throttle linkage between the pedal and the carburetter is free and has no tendency to stick, also ensure full throttle operation.

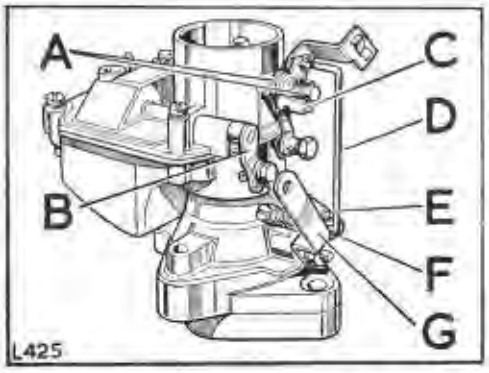


**Fig. L1-22. Interconnecting linkage**

A—Choke linkage return springs
B—Accelerator pump spindle lever
C—Choke operating tab
D—Interconnecting link
E—Throttle spindle relay lever
F—Throttle spindle floating lever
G—Throttle lever

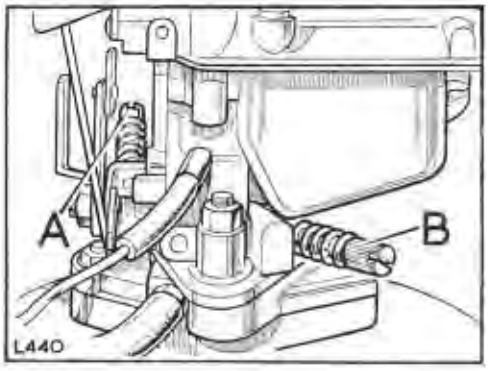


**Fig. L1-23. Carburetter slow running adjustment**

A—Throttle stop screw
B—Idling volume control screw

1. Start engine and run until warm, denoted by thermostat outlet pipe becoming warm to the touch. Continue running for a further five minutes to thoroughly stabilise engine temperature.
2. Adjust the throttle stop screw to obtain engine idling speed of 500 rpm.
3. Adjust the idling volume control screw until the engine runs smoothly and evenly. Recheck idle speed and correct as necessary. Recheck idling stability. It may be necessary to alternate adjustments between idling volume control screw and throttle stop screw to obtain the required idling setting. The idling volume control screw is then at the setting position required for all engine operating conditions.

   To confirm that the setting position selected is correct, turn the volume control screw in and out respectively from the setting position by approximately one-half turn; at these checking positions the engine note will alter and the engine running will become uneven. After checking, return the volume control screw to the correct setting position selected midway between the checking positions.

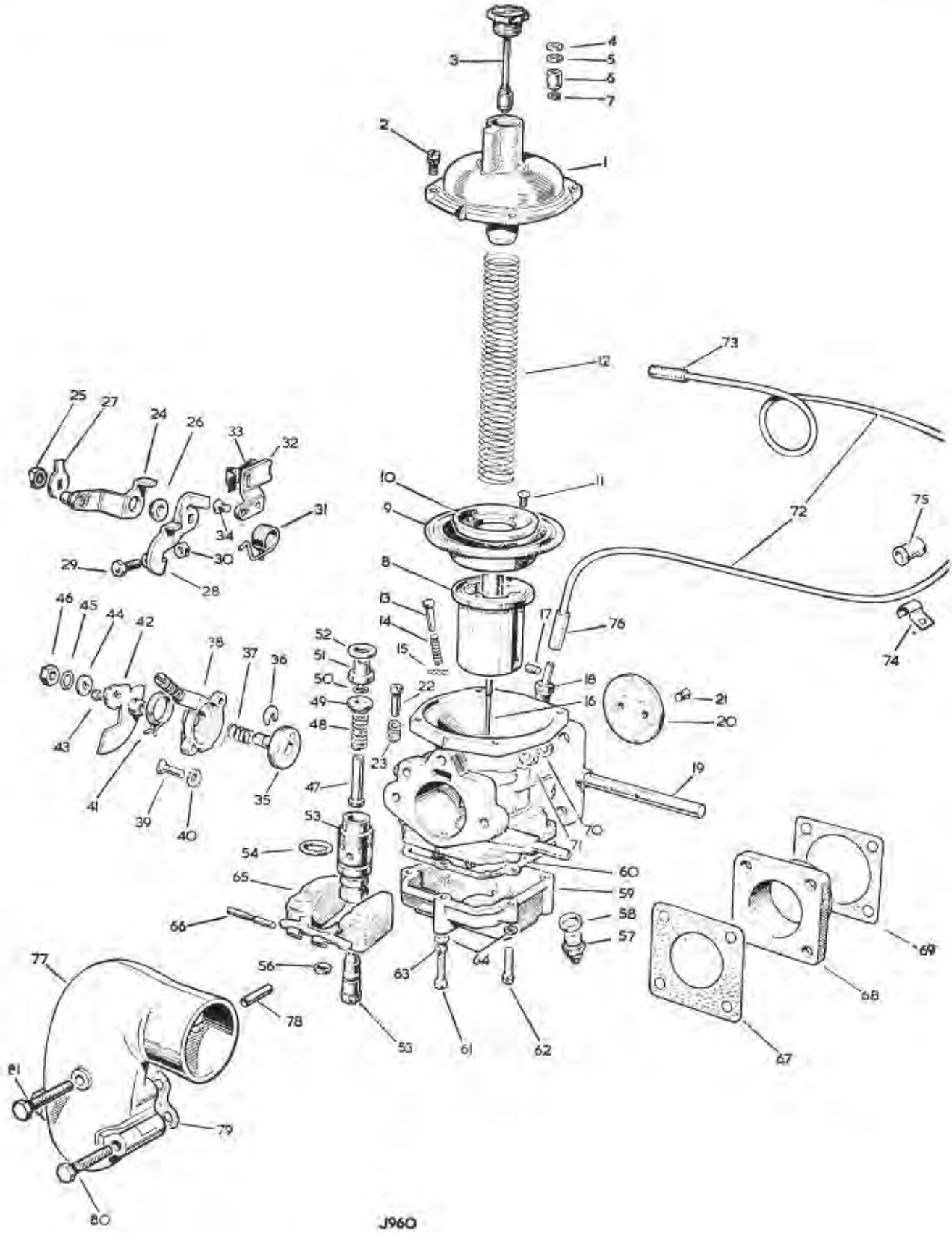


Fig. L1-24. Layout of Stromberg carburetter

**Key to illustration of carburetter**

1 Top cover for carburetter
2 Special screw and washer fixing top cover
3 Damper and oil cap assembly
4 Special washer, upper
5 Special washer, lower
6 Bush for damper
7 Retaining ring, for damper
8 Air valve, shaft and diaphragm assembly
9 Diaphragm
10 Retaining ring for diaphragm
11 Special screw fixing retaining ring
12 Return spring for air valve
13 Lifting pin for air valve
14 Spring for lifting pin
15 Spring clip for lifting pin
16 Metering needle
17 Locking screw for metering needle
18 Ignition adaptor
19 Throttle spindle
20 Butterfly for throttle
21 Special screw fixing butterfly
22 Throttle stop screw
23 Spring for stop screw
24 Throttle lever
25 Special nut
26 Special washer
27 Tab washer
} Fixing throttle levers
28 Throttle stop and fast-idle lever
29 Special screw
30 Locknut
} For throttle stop
31 Throttle return spring
32 Bracket and clip for choke cable
33 Clip for choke bracket
34 Special screw fixing choke bracket
35 Cold start spindle
36 Special washer for starter spindle
37 Cold start spring
38 Cover for cold start
39 Special screw
40 Shakeproof washer
} Fixing cover
41 Return spring for cam lever
42 Cam lever for cold start
43 Clamping screw for cam lever swivel
44 Spacing washer
45 Shakeproof washer
46 Special nut
} Fixing cam lever to cold start spindle
47 Jet orifice
48 Spring
49 Guide bush
50 'O' ring
51 Bush
52 Special washer
} For jet orifice
53 Carrier for jet orifice
54 'O' ring for carrier
55 Adjusting screw for jet orifice
56 'O' ring for adjusting screw
57 Needle valve
58 Washer for needle valve
59 Float chamber
60 Gasket for float chamber
61 Special screw, long
62 Special screw, short
63 Spring washer
64 Plain washer
} Fixing float chamber
65 Float and arm
66 Spindle for float
67 Joint washer for carburetter
68 Adaptor for carburetter
69 Joint washer for adaptor
70 Spring washer
71 Nut ($\frac{5}{16}$ in. UNF)
} Fixing carburetter and adaptor to cylinder head
72 Suction pipe, carburetter to distributor
73 Rubber sleeve, suction pipe to distributor
74 Clip for suction pipe
75 Rubber grommet for clip
} On engine
76 Rubber sleeve, suction pipe to carburetter
77 Air inlet elbow assembly
78 Adaptor for top breather hose
79 Joint washer for inlet elbow
80 Set bolt ($\frac{5}{16}$ in. UNC x $2\frac{1}{2}$ in. long)
81 Set bolt $\frac{5}{16}$ in. UNC x 3 in. long)
} Fixing elbow to carburetter

## Stromberg carburetter (Zenith type 175 CD-2S), to overhaul—Operation L1-3

*(For removal and refitting instructions, Section A refers)*

Workshop hand tools:
Spanner sizes: $\frac{1}{4}$ in. BSF, $\frac{5}{16}$ in. BSF ring, $\frac{5}{8}$ in. AF open end
Screwdriver (medium), Phillips screwdriver

### Carburetter, to dismantle

#### Piston assembly, to remove

1. Remove oil cap and damper.
2. Remove top cover and spring.
3. Remove air valve, shaft and diaphragm assembly.

#### Float chamber, to remove

4. Remove metering needle retained by locking screw.
5. Remove diaphragm from air valve.
6. Detach float chamber from carburetter body with gasket.
7. Remove jet assembly complete, then strip assembly fully.
8. Unclip float and arm with spindle.
9. Remove needle valve and washer from carburetter body.

#### Carburetter body, to dismantle

10. Remove ignition adaptor from carburetter body.
11. Remove throttle butterfly from the throttle spindle after marking up.

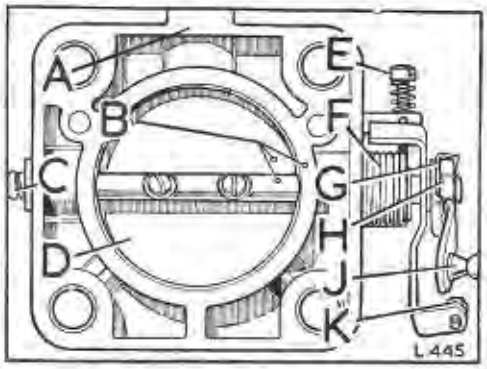


**Fig. L1-25. Throttle butterfly assembly**

A—Carburetter body
B—Marks to be added during dismantling
C—Throttle spindle
D—Throttle butterfly
E—Fast idle adjusting screw
F—Throttle return spring
G—Tab washer
H—Locknut
J—Throttle lever
K—Throttle stop and fast idle lever

12. Withdraw throttle spindle from carburetter body and strip down throttle linkage if necessary.
13. Remove fast-idle adjusting screw.
14. Detach cold start assembly.
15. Strip cold start assembly.

### Inspection and cleaning

**Special notes:**

1. **Carburetter cleaning.**
   When cleaning fuel passages do not use metal tools (files, scrapers, drills, etc.) which could cause dimensional changes in the drillings or jets. Cleaning should be effected using clean fuel and where necessary a moisture-free air blast.
2. **Joint faces.**
   Examine the faces for deep scores which would lead to leakage taking place when assembled.
3. **Joint gasket and seals.**
   New gaskets and seals should be used throughout carburetter rebuild. A complete set of gaskets is available for replacement purposes.
4. Examine throttle spindle bushes for wear, if oval or badly worn renew carburetter body.
5. Inspect metering needle, it is machined to very close limits and should be handled with care. Examine for wear, bend and twist, renew if necessary.
6. **Diaphragm.**
   In common with other products made from rubber compounds, any contact of the diaphragm with volite cleaners should be avoided, use only CLEAN RAG. Examine for damage and deterioration.
7. Examine float, for puncture or damage and chamber for corrosion, retaining clips for wear.
8. Examine cold start bushes for wear, renew starter cover as necessary.
9. Examine clamping screw for two positions, renew as necessary.
10. Examine lifting pin for air valve for correct operation.

## Operation L1-3—*continued*

### Carburetter, to rebuild

### Cold start, to rebuild

1. Fit the cold start spring behind the discs and secure with spring retaining clip, ensure discs are able to move easily on spindle.
2. Position cold start return spring on starter cover as illustrated.
3. Offer up cold start spindle assembly to starter cover, paying particular attention to the position of the slots in the disc; refit cam lever then secure in position.
4. Fit the cold start assembly to carburetter body. Then check for ease of operation.

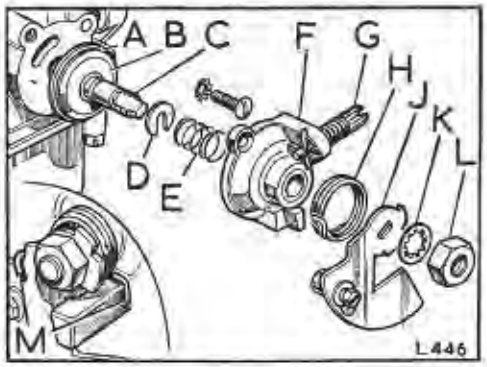


**Fig. L1-26. Cold start assembly**

A—Cold start outer disc
B—Cold start inner disc
C—Cold start spindle
D—Spring retaining clip
E—Cold start spring
F—Cover for cold start
G—Clamping screw for cam lever swivel
H—Return spring for cam lever
J—Cam lever for cold start
K—Shakeproof washer
L—Locknut
M—Return spring location

### Carburetter body, to rebuild

5. Take throttle spindle, with recessed end upwards, fit throttle return spring, throttle stop and idle lever then washer, followed by throttle lever washer, tab washer and locknut. Fully secure assembly and lock tab washer.
6. Insert throttle spindle into throttle flange from the cold start side of carburetter body, fitting the throttle return spring on the fast idle adjusting holder and tension spring half a turn.
7. Fit the throttle butterfly into the throttle lever as previously marked then centralise the throttle butterfly after fitting the retaining screws loosely and actuating the throttle a number of times to align up in the central position. Then tighten securing screws and lock by peening ends of screws.

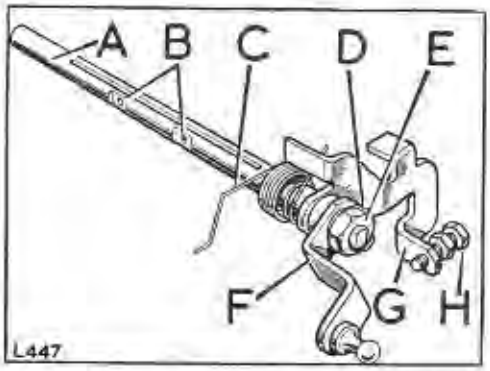


**Fig. L1-27. Throttle spindle arrangement**

A—Throttle spindle
B—Recess in shaft
C—Throttle return spring
D—Tab washer
E—Locknut
F—Throttle lever
G—Throttle stop and fast idle lever
H—Throttle stop

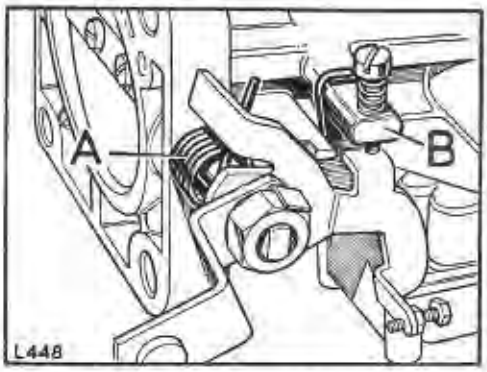


**Fig. L1-28. Throttle return spring position**

A—Return spring
B—Carburetter body

## Operation L1-3—*continued*

8. Fit spring-loaded adjusting screw till it touches the throttle stop and fast-idle lever then turn another one and a half turns.
9. Fit ignition adaptor to carburetter body securely.

**Float chamber, to rebuild**

10. Fit needle valve and washer to carburetter body.
11. Fit spindle into float arm then securely clip the spindle into the retaining clips as illustrated.
12. With the needle valve on its seating and the end tab on the float carrier, contacting on the needle valve, measure the distance between the flange face and the highest point on the floats, as illustrated.

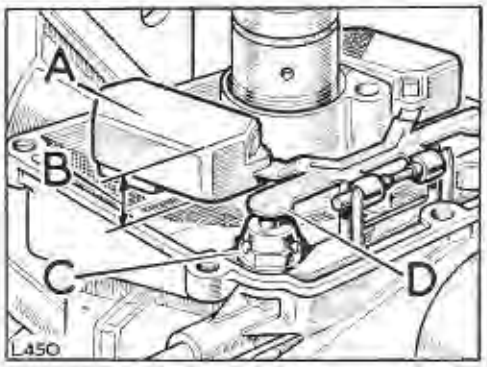


**Fig. L1-29. Float level adjustment**

A—Float
B—$\frac{5}{8}$ in. (16 mm)
C—Needle valve
D—Tag

13. The dimension required at this check is 0.67 in. (17 mm) to 0.71 in. (18 mm). Any adjustment must be made by either bending the tag which contacts the end of the needle, or fitting an additional washer under the needle seating arrangement.

    **Note:** Care should be taken to maintain the tag at right-angles to the needle in the closed position.

14. Fit joint gasket to the float chamber then fit float chamber to the carburetter body, do not fully tighten securing screws at this stage.
15. Fit the three 'O' rings to the jet assembly.
16. Place the spring over the jet orifice followed by the guide bush and bushing which has the 'O' ring fitted in.
17. Place the jet orifice assembly into carrier for jet orifice and insert assembly through float chamber then fully tighten.
18. Fit the adjusting screw for the jet orifice at the bottom of the jet assembly and adjust up until the jet orifice just appears in line with the top of the bushing for jet orifice.

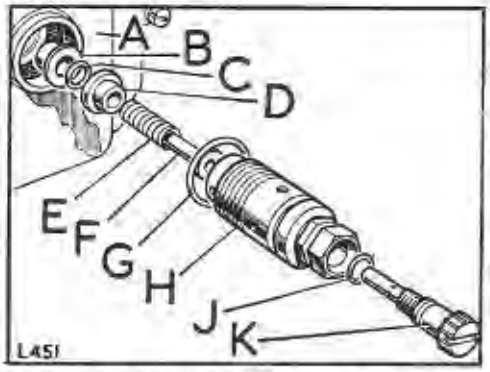


**Fig. L1-30. Jet assembly**

A—Carburetter body, throttle orifice
B—Bushing for jet orifice
C—'O' ring for bushing for jet orifice
D—Guide bush
E—Spring for jet orifice
F—Jet orifice
G—'O' ring for jet carrier
H—Carrier for jet orifice
J—'O' ring for jet orifice
K—Adjusting screw for jet orifice

**Air valve, shaft and diaphragm, to assemble**

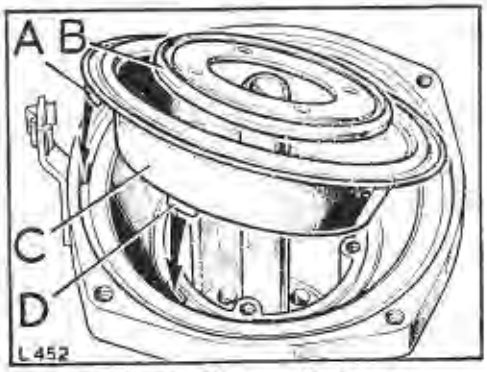


**Fig. L1-31. Air vane diaphragm**

A—Locating tab, outer
B—Retaining ring for diaphragm
C—Air vane diaphragm
D—Inner locating tab

## Operation L1-3—*continued*

19. Fit the diaphragm to the valve ensuring that the locating tab is inserted in the recess in the air valve then fully secure with retaining ring.

20. Carefully fit the metering needle to the air valve aligning the shoulder of the needle with the top surface of the shaft, as illustrated.

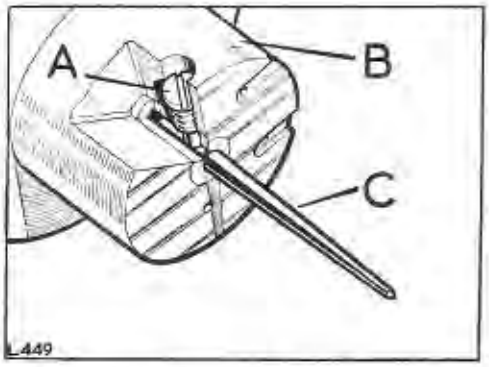


**Fig. L1-32. Metering needle position**

A—Retaining screw
B—Piston
C—Metering needle

### Jet centralisation

**Note:** The efficient operation of the carburetter depends on the free movement of the air valve and needle in the jet orifice. In the Stromberg there is an annular clearance around the orifice bush which permits the lateral positioning of the bush and jet. Thus it may be clamped up in such a position that the metering needle moves freely in the orifice.

21. Very carefully insert needle into jet orifice and allow it to bottom, if any difficulty is encountered unclamp the jet assembly enough to allow the jet to bottom. In this position ensure that the locating tab on the diaphragm fits into the recess on the carburetter body.

22. Fit the air valve return spring and carburetter top cover, aligning the marks, then secure assembly.

23. Lift the air valve and tighten the jet assembly fully.

24. Slacken off the whole jet assembly approximately half a turn to release the orifice bush.

25. Allow the air valve to fall; the needle will then enter the orifice and thus automatically centralise it. If necessary, assist the air valve drop by inserting a pencil in the dashpot.

26. Slowly tighten the jet assembly, checking frequently that the needle remains free in the orifice. Check by raising the air valve approximately $\frac{1}{8}$ in. (6 mm) and allowing it to fall freely. The position should then stop firmly on the bridge.

27. Fill up the dashpot in the air valve to within a $\frac{1}{2}$ in. (6 mm) of the rod in which the damper operates with SAE 20 engine oil.

28. Fit in the damper assembly and fully secure.

### Adjustments

### Setting the idle

Two adjustments are used when regulating the idle speed and mixture. The following procedure should be used in setting the throttle adjusting screw which controls the speed, and jet adjusting screw, which determines the mixture strength.

1. Remove the air cleaner.
2. Remove the damper assembly.
3. Hold the air valve down on the bridge in the throttle bore.
4. Screw up the jet adjustment screw until the jet is felt to come into contact with the underside of the air valve.
5. Turn down the jet adjusting screw three turns.
6. Run the engine till it is thoroughly warm.
7. Adjust the throttle adjusting screw to an idle speed of 500 rpm.

   **Note:** The idle mixture will be correct when the engine speed is smooth and regular, and by careful and gradual adjustment of the jet adjustment screw, the correct adjustment will be determined.

### To check

Lift the air valve $\frac{1}{32}$ in. (0,8 mm). If the engine speed rises the mixture is too rich, if the engine stops it is too weak. Correctly adjusted it will remain constant or fall slightly in speed. Turning the orifice adjusting screw into carburetter decreases the mixture strength; unscrewing will enrich.

## Operation L1-3—*continued*

8. Fit the damper assembly.
9. Fit the air cleaner.

**Fast-idle adjustment (choke)**

1. Operate choke fully.
2. Adjust fast-idle stop screw until engine speed is 1,000 to 1,200 rpm.
3. Push choke fully in and ensure that fast-idle stop screw is clear of choke cam lever.

## SU carburetter, to overhaul—Operation L1-4

*(For removal and refitting instructions, Section A refers)*

Workshop hand tools:
Spanner sizes: $\frac{11}{32}$ in. AF, $\frac{7}{16}$ in. AF, $\frac{1}{4}$ in. Whit, $\frac{5}{16}$ in. Whit, $\frac{3}{8}$ in. Whit. 2 BA
Screwdriver (medium), Pliers (long nosed)

### Carburetter, to dismantle

1. Unscrew oil cap, complete with hydraulic damper and washer, withdraw.
2. Remove suction chamber.
3. Remove piston spring and protection washer from inside piston.
4. Withdraw piston.
5. Slacken needle retaining screw inside of piston and remove needle.
6. Remove double-ended union, fibre washer and gauze filter assembly from top of float chamber.
7. Remove banjo union.
8. Remove float chamber lid, float and joint washer.
9. Remove splined pivot from fork and needle valve.
10. Remove adaptor and gasket from carburetter body.
11. Remove float chamber from base of carburetter body.
12. Remove jet return spring and diaphragm from jet housing and remove jet housing.
13. Remove sliding rod securing screw.
14. Remove jet screw and jet bearing from carburetter body.
15. Remove the slow running adjusting valve complete with spring, dished brass washer and gland.
16. Remove throttle return spring lever from throttle spindle.
17. With butterfly in fully closed position, mark the butterfly with three lines, relative to carburetter body and throttle spindle, to ensure it is refitted in the same position.

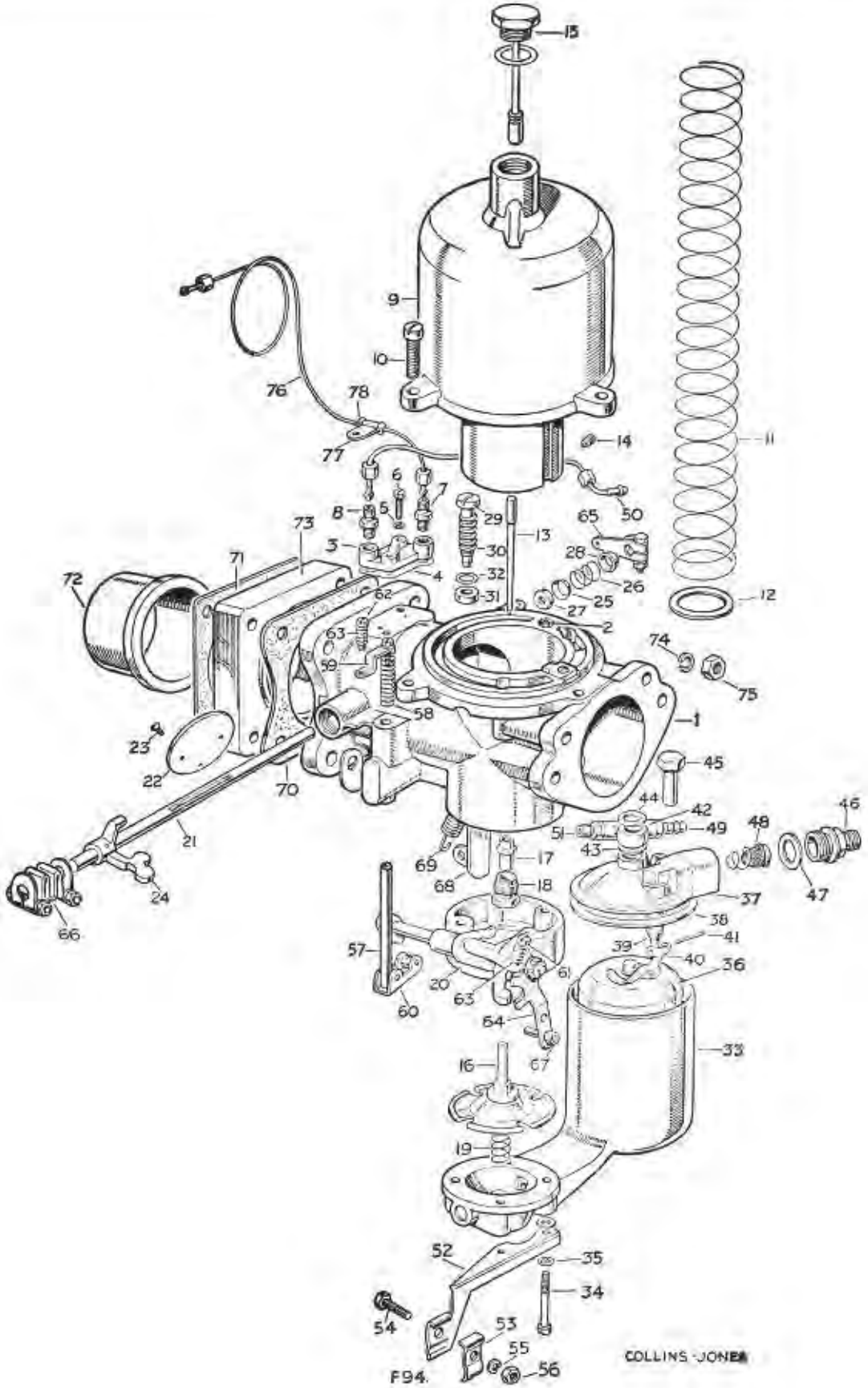


Fig. L1-33. Layout of SU carburetter

**Key to layout of SU carburetter**

1 Carburetter body
3 Adaptor, ignition and weakening device
4 Gasket for adaptor
5 Shakeproof washer } Fixing adaptor
6 Screw }
7 Union for ignition pipe
8 Union for economiser pipe
9 Suction chamber and piston complete
10 Special screw fixing suction chamber
11 Spring for piston (yellow)
12 Thrust washer for suction chamber
13 Needle, SS
14 Special screw fixing needle
15 Oil cap complete
16 Jet complete
17 Jet bearing
18 Jet screw
19 Jet spring
20 Jet housing complete
21 Throttle spindle
22 Throttle butterfly
23 Screw for throttle butterfly
24 Throttle stop
25 Gland washer for throttle spindle, brass
26 Spring for throttle spindle gland
27 Gland washer for throttle spindle, langite
28 Retainer cap for gland washer
29 Slow-running adjusting valve
30 Gland spring for slow running
31 Gland washer for slow running, rubber
32 Brass washer for slow running
33 Float chamber
34 Bolt } Fixing float chamber
35 Shakeproof washer }
36 Float
37 Lid for float chamber
38 Joint washer for float chamber lid
39 Needle valve and seat
40 Lever for float
41 Pin for lever
42 Banjo } On float chamber
43 Fibre washer for banjo }
44 Aluminium washer for banjo }
45 Cap nut fixing banjo }
46 Double-ended union for carburetter
47 Washer for union
48 Filter and spring for carburetter body
49 Economiser union for rubber tube
50 Pipe for economiser
51 Union for economiser pipe
57 Sliding rod, roller and cam shoe
58 Spring for sliding rod
59 Top plate
61 Stop screw, bottom
62 Stop screw, top
63 Spring for stop screw
64 Cold start lever
65 Lever for throttle return spring
68 Bracket for throttle return spring
69 Throttle return spring
70 Joint washer for carburetter
71 Joint washer for distance piece
72 Liner for manifold
73 Distance piece for carburetter
74 Spring washer } Fixing carburetter and distance piece to cylinder head
75 Nut ($\frac{5}{16}$ in. UNF) }
76 Suction pipe complete
77 Clip for suction pipe } On engine
78 Rubber grommet for clip }

## Operation L1-4—*continued*

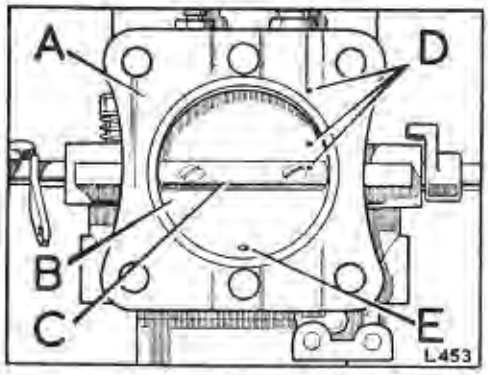


**Fig. L1-34. Adding alignment marks to butterfly assembly**

A—Carburetter body
B—Throttle butterfly
C—Throttle spindle
D—Aligning marks
E—Hole in throttle butterfly

18. With a pair of long-nosed pliers, close split ends of throttle butterfly retaining screws and remove; push out butterfly and withdraw spindle.
19. Lever out gland retainers and remove spring, gland washers and glands from both sides.

### Inspection and cleaning

**Special notes:**

1. **Carburetter cleaning.**

   When cleaning fuel passages do not use metal tools (files, scrapers, drills, etc.) which could cause dimensional changes in the drillings or jets. Cleaning should be effected using clean fuel and where necessary a moisture-free air blast.

2. **Joint faces.**

   Examine the faces for deep scores which would lead to leakage taking place when assembled.

3. **Joint gasket and seals.**

   New gaskets and seals should be used throughout carburetter rebuild. A complete set of gaskets is available for replacement purposes.

4. Examine throttle spindle bushes for wear, if oval or badly worn, renew carburetter body.
5. Inspect metering needle, it is machined to very close limits and should be handled with care. Examine for wear, bend and twist, renew if necessary.
6. **Diaphragm.**

   In common with other products made from rubber compounds, any contact of the diaphragm with volite cleaners should be avoided, use only CLEAN RAG. Examine for damage and deterioration.

7. Examine float, for puncture or damage and chamber for corrosion, retaining clips for wear.
8. Examine cold start bushes for wear, renew as necessary.
9. Examine lifting pin for piston for correct operation.

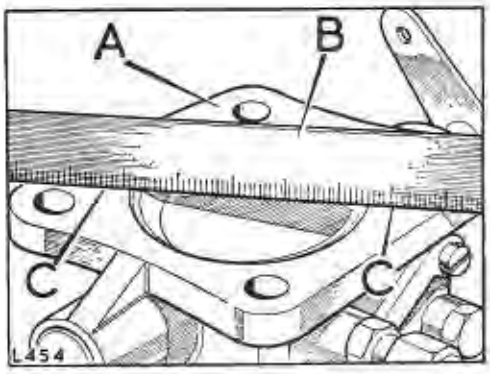


**Fig. L1-35. Checking mounting flange**

A—Carburetter flange
B—Straight edge
C—Flush fit

### Carburetter, to rebuild

1. Insert carburetter spindle into carburetter body from left to right as viewed from carburetter air intake.

## Operation L1-4—*continued*

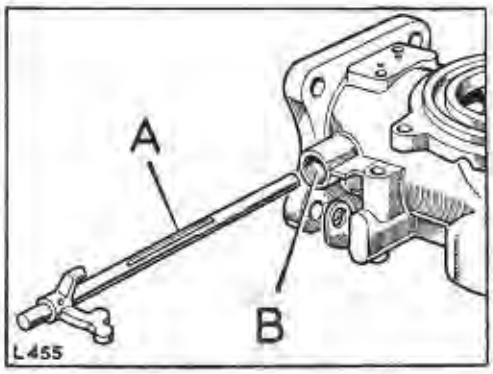


**Fig. L1-36. Fitting throttle spindle**

A—Spindle
B—Carburetter body

2. Insert new langite gland washer for throttle spindle followed by gland brass washer, spring and retainer, using a suitable piece of tubing, into right-hand spindle housing.

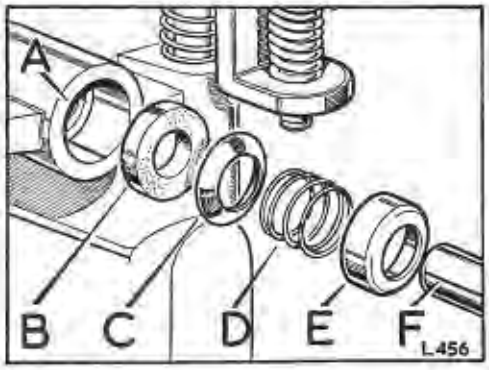


**Fig. L1-37. Spindle gland assembly**

A—Carburetter body
B—Gland washer, Langite
C—Gland washer, Brass
D—Spring
E—Retainer
F—Spindle

3. Remove spindle and reinsert from right to left, reassemble LH spindle housing gland assembly as item 2.

4. Rotate spindle to the 'fully open' position and insert throttle butterfly ensuring that chamfered edges will slope in the correct direction when closed. Close throttle and insert two securing screws sufficient only to prevent the butterfly from slipping.

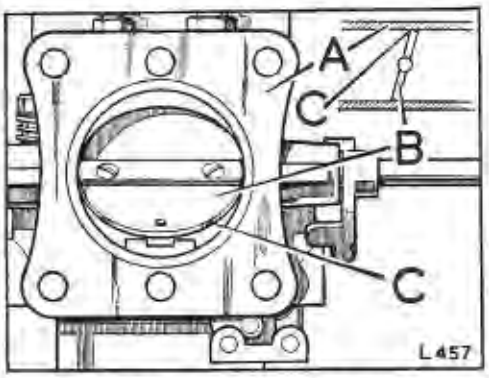


**Fig. L1-38. Fitting throttle butterfly**

A—Carburetter body
B—Throttle butterfly
C—Chamfered edge

5. Centralise the butterfly by snapping throttle shut several times, allow .015 in. (0,38 mm) minimum clearance between stop lever and body, then tighten screws and spread ends.

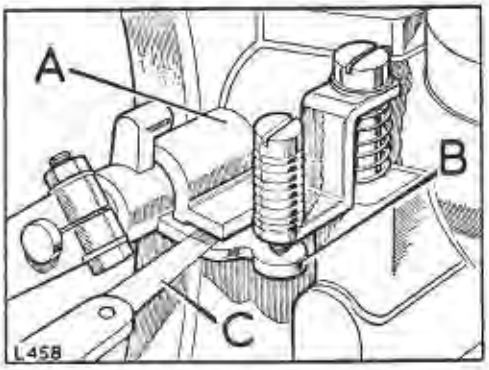


**Fig. L1-39. Checking stop lever clearance**

A—Carburetter body
B—Stop lever
C—Feeler gauge

## Operation L1-4—*continued*

6. Refit the throttle return spring lever, but do not fully tighten.
7. Fit needle to piston so that the top of the fitting register is flush with the body of the piston, as illustrated. Secure using a new screw.

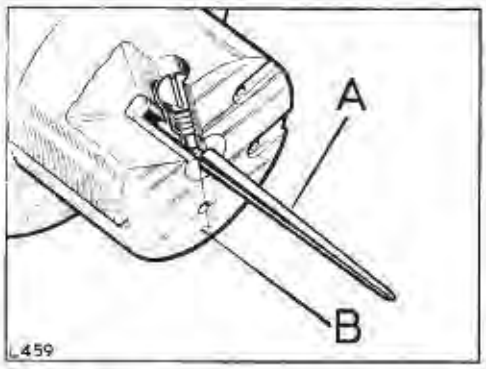


**Fig. L1-40. Needle in correct position**

A—Needle
B—Piston body

8. Insert the piston into the suction chamber and spin the piston to ensure the needle is not bent.
9. Fit jet bearing short end into the body and retain with the jet securing screw, do not tighten at this stage.

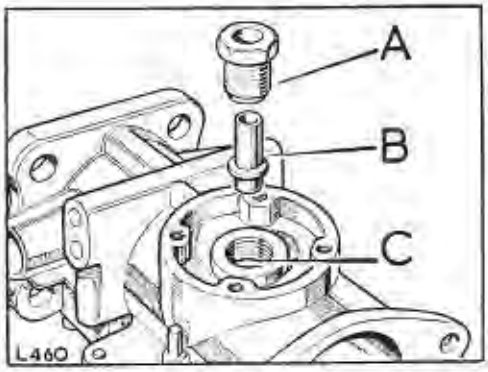


**Fig. L1-41. Fitting jet bearing**

A—Jet screw
B—Jet bearing
C—Carburetter body

10. Fit piston to carburetter body.
11. Fit thrust washer into body of piston and replace the spring.
12. Fit suction chamber to carburetter body and tighten retaining screws evenly.
13. Invert the carburetter and insert jet and diaphragm assembly, gradually tighten the jet screw ensuring that the needle is not binding on the jet. If the needle is binding, slacken the jet retaining screw and rotate the bearing to free it. Retighten jet retaining screw.
14. Remove jet and fit jet housing to carburetter body.

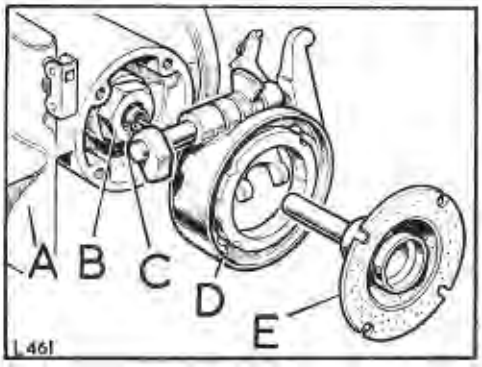


**Fig. L1-42. Fitting jet and housing**

A—Carburetter body
B—Jet screw
C—Jet bearing
D—Jet housing
E—Jet

15. Insert the jet and align the holes in the diaphragm with those corresponding to them in the jet housing.
16. Fit the jet return spring, float chamber and choke cable bracket plus two distance washers. Do not tighten securing screws at this stage.
17. Ensure that the diaphragm can move to the limit of its travel by operating choke lever, and in this position fully tighten the retaining screws.

## Operation L1-4—*continued*

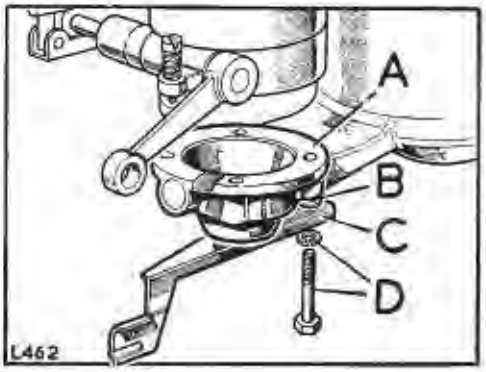


**Fig. L1-43. Float chamber and choke bracket assembly**

A—Float chamber
B—Distance piece
C—Choke bracket
D—Fixing for bracket

18. Lift piston to its fullest extent by hand, then allow it to fall under its own weight, as the piston comes to rest a distinct click should be heard, if not repeat from item 13, as jet needle is binding.
19. Refit the slow running gland, washer and slow running screw, which should be screwed right in.

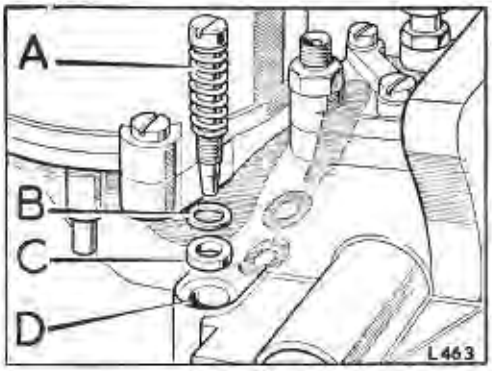


**Fig. L1-44. Slow running valve**

A—Slow running screw and spring
B—Brass washer
C—Gland washer
D—Carburetter body

20. Fit float into float chamber.
21. Fit gauze filter, fibre washer and union to the float chamber top.
22. Fit needle valve, needle valve fork and splined pivot pin to float chamber top.

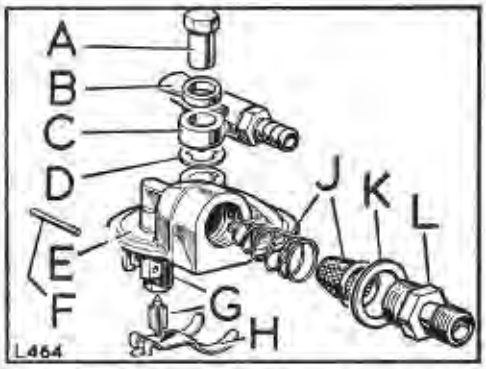


**Fig. L1-45. Float chamber lid assembly**

A—Cap nut
B—Joint washer, aluminium
C—Banjo unit
D—Joint washer, fibre
E—Lid for float chamber
F—Pin for lever
G—Needle valve and seat
H—Lever for float
J—Filter and spring
K—Joint washer
L—Inlet union

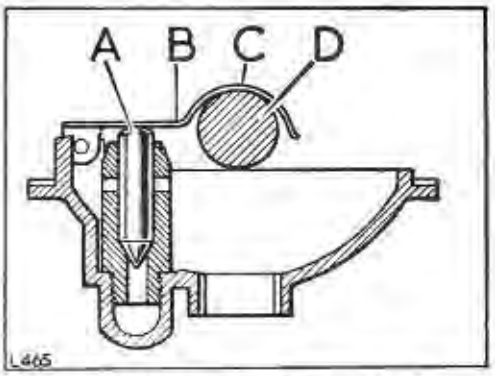


**Fig. L1-46. Fitting float level fork**

A—Needle valve
B—Point at which fork must be bent
C—Fork
D—$\frac{1}{16}$ in. round bar (11 mm)

## Operation L1-4—*continued*

23. Place $\frac{7}{16}$ in. (11 mm) round bar between needle valve fork and float chamber top, ensure that with the bar in position the valve is held on its seat, test by blowing through fuel inlet connection, no air should escape through needle valve. If any adjustments are necessary, bend at point shown in diagram until this condition is attained.
24. Fit float chamber lid washer and banjo union and retain with bolt.
25. Fit gasket to adaptor housing and fit housing to carburetter body.
26. Fit sliding rod, spring and cam shoe with screw.
27. Fill the damper reservoir with SAE 20 engine oil to within $\frac{1}{2}$ in. (12 mm) from the top of the hollow piston rod, replace the cap and fibre washer.

### Adjustments

### Setting the idle

Two adjustments are used when regulating the idle speed and mixture. The following procedure should be used in setting the throttle adjusting screw which controls the speed, and jet adjusting screw (bottom stop screw), which determines the mixture strength.

1. Remove the air cleaner.
2. Remove the damper assembly.
3. Hold the piston down on the bridge in the throttle bore.
4. Fully slacken the jet adjustment screw by screwing outward until there is free-play at the lever.
5. Screw in the jet adjusting screw one and a half turns.
6. Run the engine till it is thoroughly warm.
7. Adjust the throttle adjusting screw to an idle speed of 500 rpm.

   **Note:** The idle mixture will be correct when the engine beat is smooth and regular, and by careful and gradual adjustment of the jet adjustment screw, the correct adjustment will be determined.

### To check

Lift the piston $\frac{1}{32}$ in. (0,8 mm). If the engine speed rises the mixture is too rich, if the engine stops it is too weak. Correctly adjusted it will remain constant or fall slightly in speed. Turning the jet adjusting screw into carburetter increases the mixture strength; unscrewing will weaken.

8. Fit the damper assembly.
9. Fit the air cleaner.

## Fuel pump, mechanically driven type, to overhaul—Operation L1-5

*(For removal and refitting instructions, Section A refers)*

Workshop hand tools:
Spanner size: $\frac{11}{16}$ in. AF
Screwdriver (medium), Pliers

### To dismantle

1. Unscrew the nut at base of sediment bowl, move retainer aside, and withdraw the bowl, sealing washer and filter gauze. Care should be taken to avoid damage to filter gauze.
2. Mark the upper and lower halves of pump casing to ensure correct alignment on reassembly.

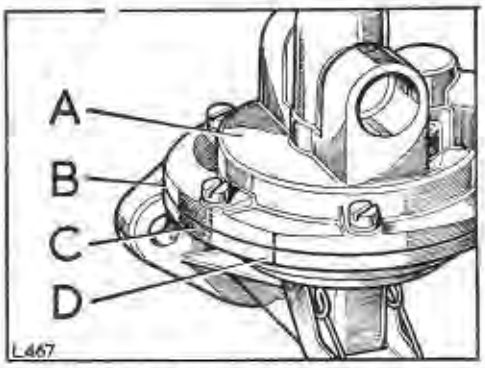


**Fig. L1-47. Adding alignment marks**

A—Top cover
B—Diaphragm
C—Pump body
D—Alignment marks

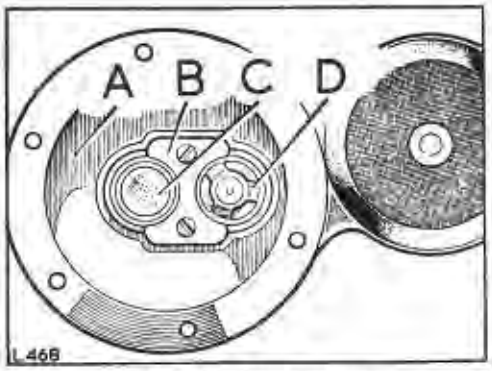


**Fig. L1-48. Pump valves**

A—Top cover
B—Retaining plate
C—Outlet valve
D—Inlet valve

3. Remove top cover fixing screws, and while pressing diaphragm tab against pump body, lift top cover clear.
4. Remove valve retaining plate and withdraw valves, noting valve positions.
5. Ease the diaphragm from pump body, slightly depress metal part of diaphragm and turn through 90° in either direction, whereon the diaphragm spring will push diaphragm clear.
6. File peening marks from oil seal housing and lever out oil seal and retainer.
7. To remove rocker arm and operating link:

   (Early models)

   (a) Remove circlips then drift the rocker arm pivot pin from the pump body and withdraw rocker arm, operating link, return spring and plain washers.

   (Later models)

   (b) Using a small chisel, remove peening from rocker arm retainers, remove retainers, rocker arm, spacing washers, operating link and return spring.
8. It is extremely unlikely that the hand priming mechanism will ever require replacement, but may be removed by filing the hexagon each side of the operating lever and springing the hand lever clear, withdraw the cork washers and hand rocker.

### Inspection

1. Clean all parts thoroughly in paraffin.
2. Examine all parts for wear and replace as necessary, observe the following points:
   (a) All gaskets to be renewed.
   (b) Sediment bowl filter disc must be free of damage and fit tightly round inlet neck of upper casing.
   (c) Renew diaphragm assembly if any sign of hardening, cracking or porosity is present.
   (d) Only very slight wear should be tolerated at the rocker arm contact face, pivot pin, operating link and diaphragm pull rod slots.
   (e) Springs should be renewed, but ensure correct type are used.
   (f) Test valves for air tightness, by suction.
   (g) Check upper and lower casing flanges for distortion, using a straight edge.

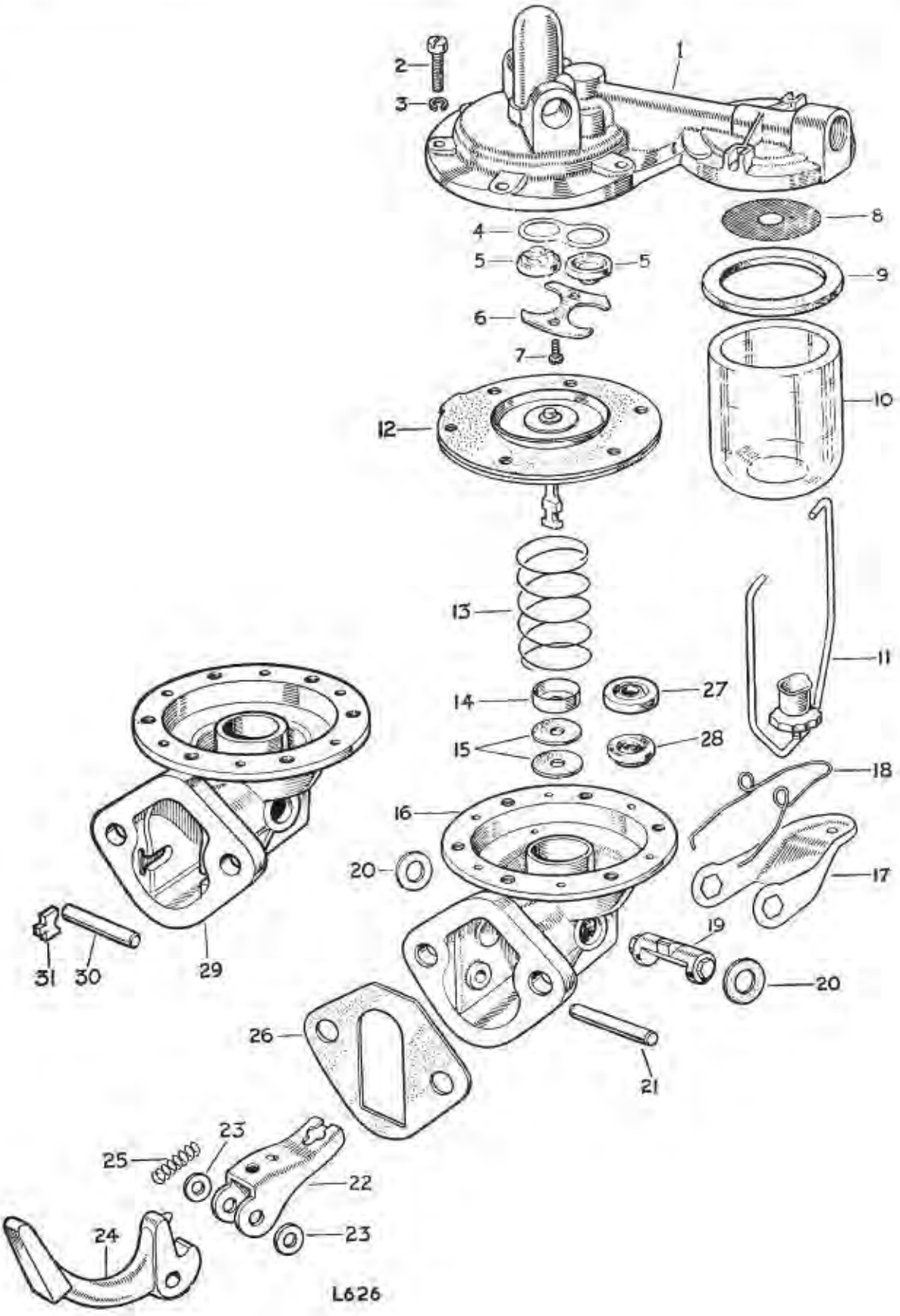


Fig. L1-49. Layout of mechanical fuel pump

**Key to layout of mechanical fuel pump**

1 Top cover
2 Securing screws
3 Spring washer
4 Valve gasket
5 Valves
6 Retainer for valves
7 Screw for retainer
8 Gauge filter disc
9 Lock sealing gasket
10 Sediment bowl
11 Bowl retainer
12 Diaphragm assembly
13 Diaphragm spring
14 Oil seal retainer
15 Sealing washers
16 Pump body
} Early type

17 Hand priming lever
18 Return spring for hand lever
19 Hand rocker
20 Cork washers
21 Rocker arm pivot pin, early type
22 Operating link
23 Plain washers
24 Rocker arm
25 Return spring
26 Joint washer
27 Oil seal retainer
28 Oil seal
29 Pump body
30 Rocker arm pivot pin
31 Retainer for pivot pin
} Latest type

## Operation L1-5—*continued*

**To rebuild**

**(Early models)**

1. Assemble operating link, rocker arm and spacing washers on a piece of rod .240 in. (6,1 mm) diameter in place of pivot pin.
2. Drive in pivot pin, replacing reduced diameter rod used for assembly location, replace circlips.

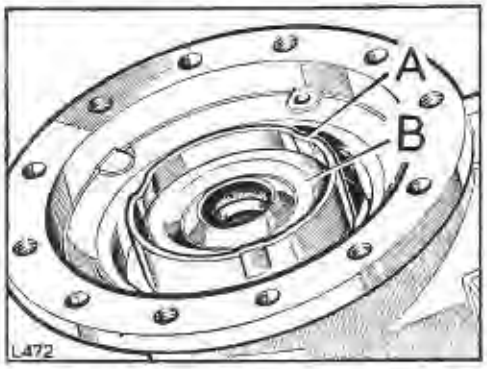


**Fig. L1-50. Peening oil seal housing**
A—Peen housing in three places
B—Oil seal retainer

**Late models**

3. Reassemble rocker arm operating link and spacing washer on to pivot pin and refit to pump body.
4. Tap new retainers into their grooves, hold retainer firmly against pivot pin, peen over the ends of the grooves to ensure they cannot work loose.
   **Note:** Replacement retainers are slightly shorter than the original to allow for satisfactory fixing in the body.
5. Fit oil seal into retainer and press assembly into oil seal housing, peen over housing flange to retain oil seal assembly, in at least three positions.
6. To refit the diaphragm assembly, hold the pump body with the diaphragm return spring in position, and the rocker arm held outwards. Position the diaphragm over the spring with the flattened end of the pull rod in line with the slot in the operating link. Push the diaphragm inwards and turn lock.
7. Replace the valve gasket, inlet and outlet valve into top cover and secure with the retaining clip.
8. Place top cover assembly in position, aligning the marks made before dismantling. Fit securing screws, but do not tighten at this stage, using hand priming lever, fully depress diaphragm and fully tighten securing screws.

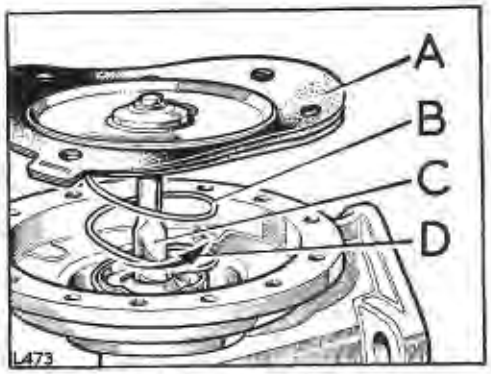


**Fig. L1-51. Fitting diaphragm**
A—Diaphragm
B—Spring
C—Operating link
D—Push inward and turn through 90°

**Note:** The diaphragm outer edges should be approximately flush with the outer edge of the pump joint faces when fitted, any appreciable protrusion of the diaphragm beyond the joint face edges indicates improper fitment and necessitates the release of the securing screws and refitment in accordance with item 8.

9. Replace filter gauze and neoprene sealing ring, refit retaining clip and position sediment bowl centrally and secure with retaining clip.
   **Note:** Do not overtighten securing nut, to prevent cracking of sediment bowl.

**Fuel pump test:** without special equipment

1. Immerse pump in a bath of paraffin and operate rocker arm several times to flush.
2. Hold the pump clear of the bath and continue to operate the rocker arm until the pump is empty, then place a finger over the inlet port and operate rocker arm several times. A distinct suction should be heard when the finger is removed from the inlet port, denoting that a reasonable degree of suction has been developed.
3. Place a finger over the outlet port and again operate the rocker arm. Air pressure should be felt for two to three seconds after rocker movement has ceased. Build up the air pressure in the pump again, and with the finger held firmly over the outlet, submerge the pump completely in the paraffin bath, then observe the joint face edges for signs of air leakage.

## Fuel pump (double entry), electrically driven, to remove and refit —Operation L1-6

*(For overhaul instructions, Operation L1-7 refers)*

Workshop hand tools:
Spanner sizes: $\frac{7}{16}$ in. AF, $\frac{3}{8}$ in. BSF

### Fuel pump, remove

1. Disconnect the battery leads.
2. Lift seat (RH side) and remove seat box panel to expose fuel pump.
3. Disconnect the wiring at the 'Lucar' connectors.
4. Disconnect all pipes from the pump.
5. Remove the pump from the mounting bracket.

### Fuel pump, refit

1. Reverse removal procedure.
2. Check pump for correct operation.

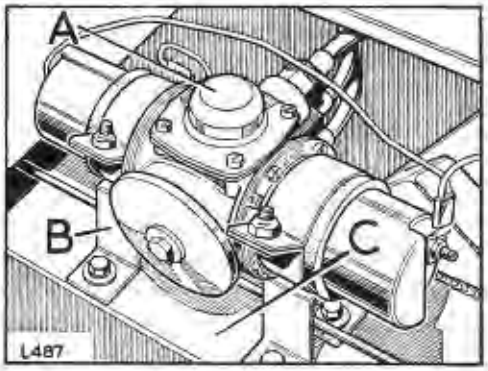


**Fig. L1-52. Fuel pump**

A—Fuel pump, dual type
B—Bracket fixing fuel pump
C—Chassis frame

## Fuel pump (double entry), electrically driven, to overhaul—Operation L1-7

*(For removal and refitting instructions, Operation L1-6 refers)*

Workshop hand tools:
Spanner sizes: $\frac{7}{16}$ in. AF, $\frac{11}{16}$ in. AF open end
Screwdriver (medium), Feeler gauges

Special tool:
Fork wedge for contact breaker, Part No. 263058

### Fuel pump, to dismantle

### Electric pump, to strip

1. Remove end cover.
2. Make alignment marks between the magnet housing and the pump body to facilitate re-assembly, then remove magnet housing.
3. Ease the diaphragm away from the magnet housing and unscrew in an anti-clockwise direction, taking care to retain the eleven rollers.
4. Remove diaphragm, spring and gasket.
5. Remove spring blade contact.
6. Remove terminal screw and nut.
7. Remove end plate, taking care not to damage earthing lead.
8. Remove condenser.
9. Remove contact pivot pin from spring mechanism.
10. Remove lead washer and terminal screw from end cover.

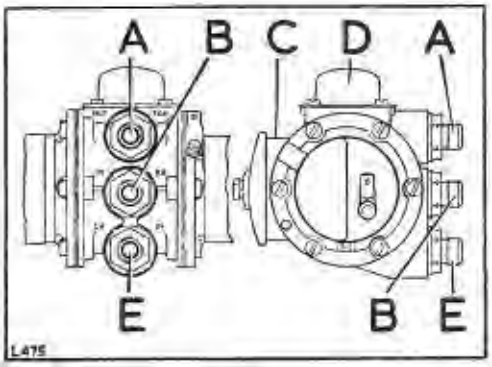


**Fig. L1-53. General arrangement of double entry fuel pump**

A—Common outlet
B—Fuel inlet
C—Inlet air bottle
D—Outlet air bottle
E—Fuel inlet

## Operation L1-7—*continued*

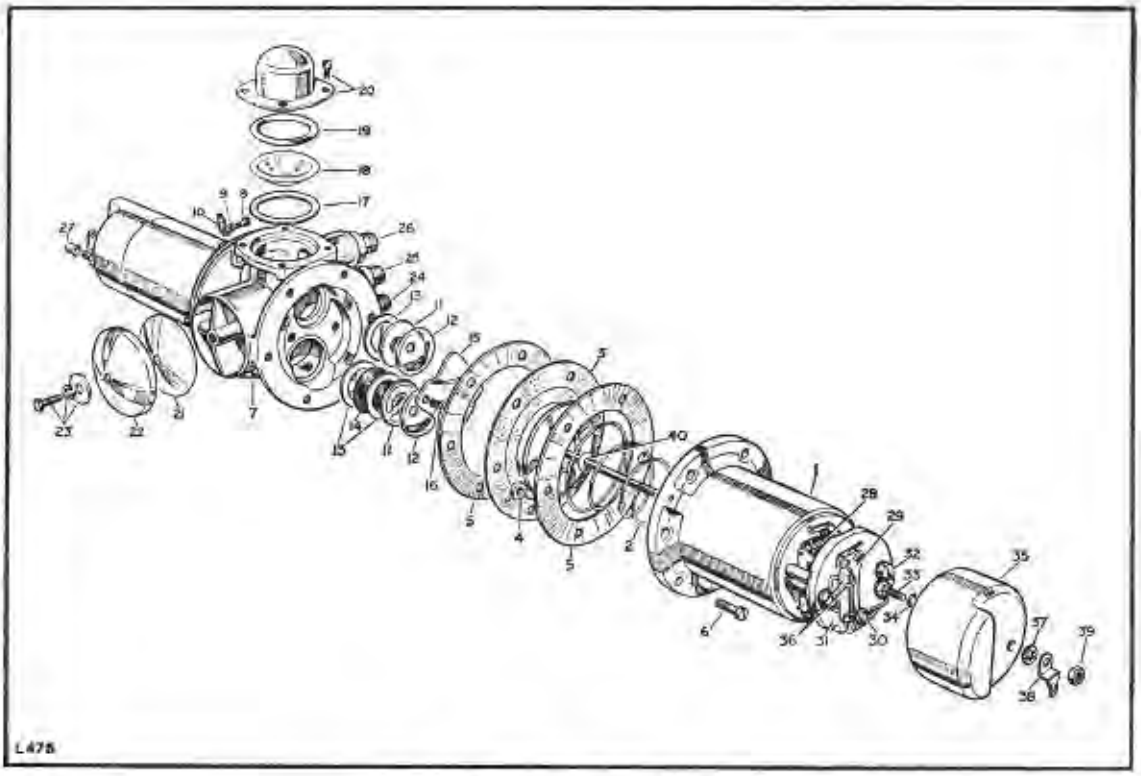


**Fig. L1-54. Double entry fuel pump**

1 Magnet housing
2 Spring for armature
3 Diaphragm
4 Roller
5 Joint washer
6 Securing screw, body to housing
7 Body
8 Special screw } Earth connection
9 Spring washer } Earth connection
10 Lucar blade } Earth connection
11 Melinex valve assembly
12 Valve cap
13 Sealing washer
14 Fuel filter
15 Clamp plate
16 Clamp plate screws
17 Sealing ring for outlet air bottle
18 Diaphragm for outlet air bottle
19 Rubber sealing ring
20 Outlet air bottle, dome and screw
21 Joint washer for inlet air bottle
22 Cover for inlet air bottle
23 Securing screw and washers
24 Union } Main fuel
25 Union } supply
26 Union for outlet pipe
27 Nylon protection cap
28 Contacts rocker assembly
29 Spring blade contact
30 Anchor screw
31 Moulded end plate
32 Retaining screw for end plate
33 Terminal screw
34 Composition washer
35 End cover
36 Condenser and clip
37 Shakeproof washer
38 Lucar blade
39 Nut
40 Impact washer for armature

## Operation L1-7—*continued*

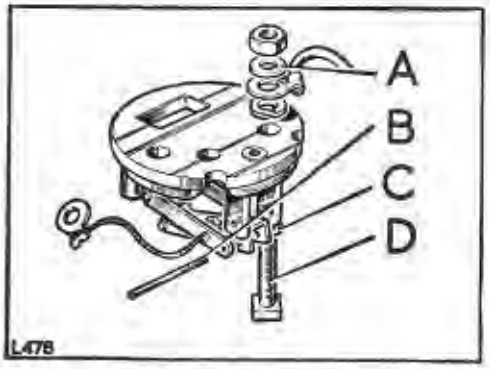


**Fig. L1-55. Pivot for contact breaker**

A—Lead washer
B—Pivot pin
C—Contact breaker pivot
D—Terminal screw

### Pump body, to strip

11. Remove the outlet air bottle dome, diaphragm and sealing rings.

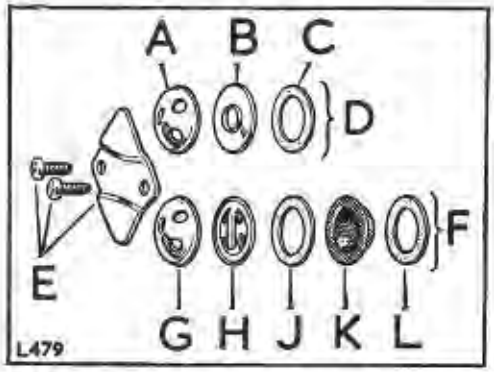


**Fig. L1-56. Layout of valve assembly, double entry type pump**

A—Retaining cap
B—Disc valve
C—Cork washer
D—Outlet valve assembly
E—Clamp plate and screw
F—Inlet valve assembly
G—Retaining cap
H—Disc valve
J—Cork washer
K—Filter
L—Cork washer

12. Remove the cover for inlet air bottle and the joint washer.
13. Strip valves:

    Details of one complete valve assembly are given, this arrangement being exactly duplicated in the other section of the pump.

    The outlet valve assembly comprises a Melinex valve disc within a pressed steel cage, and a retaining cap.

    The inlet valve assembly comprises an identical valve which is assembled in the reverse direction, a retaining cap, and a fuel filter.

    Both assemblies have suitable joint washers, and are retained by a single clamping plate which is secured by two self-tapping screws.
14. Remove the three unions and 'O' rings from the pump body.

### Inspection and cleaning

1. **Pump body cleaning.**

   Thoroughly clean all internal passageways and chambers with clean fuel.

   Check all flanges for distortion, using a straight edge.
2. Renew diaphragm gaskets and examine all components for wear and damage and renew as necessary.
3. **Electric pump inspection.**

   Renew diaphragm if any signs of deterioration, damage or wear are present.
4. Inspect contact points and renew as necessary.
5. Continuity test magnet assembly.
6. The purpose of the condenser is to prevent arcing of the contact breaker points; if the points are badly burnt, the condenser should be tested and renewed if faulty.
7. Check all electrical wiring for serviceability.

### Fuel pump, to assemble

**Pump body to assemble** (see Fig. L1-54)

1. Fit joint washer for inlet air bottle and cover, then secure.

## Operation L1-7—*continued*

2. Fit gasket, diaphragm for air bottle, sealing ring and outlet air bottle dome, then secure.
3. Fit cork gaskets, valves, fuel filter, valve caps and clamp plate as illustrated, then secure, carefully ensuring that the non-return valves are fitted correctly in opposite directions.
4. Fit inlet and outlet unions and 'O' rings.

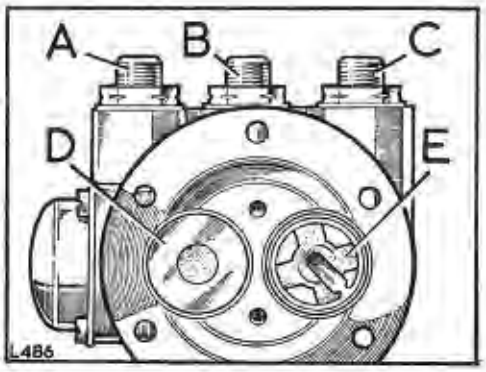


**Fig. L1-57. Valve location**

A—Outlet
B—Inlet, RH
C—Inlet, LH
D—Outlet valve
E—Inlet valve

### Electric pump, to assemble

5. Fit lower contact assembly to end plate with points facing contact aperture by inserting pivot pin, see Fig. L1-55.
6. Locate feed terminal screw into end plate and assemble feed terminal as illustrated; using the larger diameter terminal and a new lead washer.
7. Position end plate assembly on magnet housing then fit and secure with retaining screw nearest to the terminal screw.
8. Assemble condenser clip and earthing clips as illustrated, to the other end plate retaining screw and do not overtighten when securing as the end plate will be cracked.

### Magnet assembly

9. Fit the armature return spring with its large diameter towards the coil. The spring must not be stretched or the action of the pump will be affected.

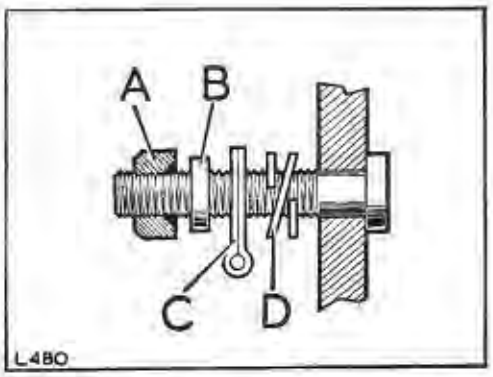


**Fig. L1-58. Feed to terminal assembly**

A—Countersunk nut
B—Lead washer
C—The tag
D—Spring washer

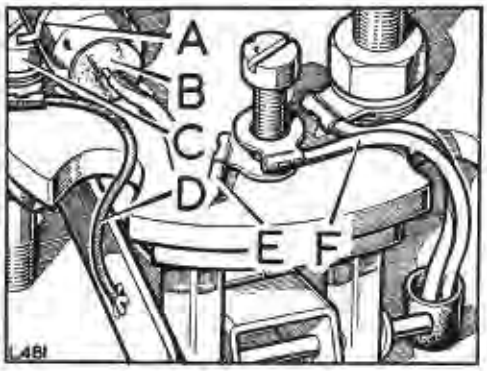


**Fig. L1-59. Fitting condenser**

A—Clip for condenser
B—Condenser
C—Screw for cover
D—Earth lead
E—Condenser lead
F—Feed lead

10. Fit the impact washer in the recess of the armature and diaphragm assembly.
11. Screw the armature in through magnet housing to engage nut retained in lower contact assembly for at least six turns.
12. Fit eleven guide rollers in position around the armature.

## Operation L1-7—*continued*

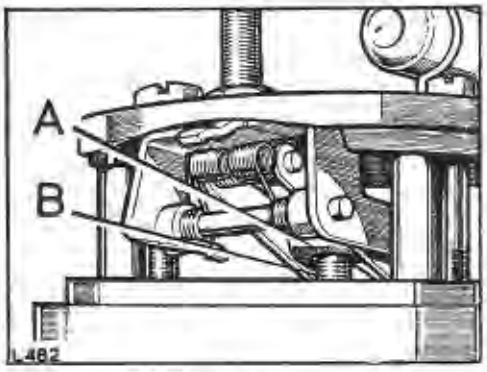


**Fig. L1-60. Fitting armature**

A—Nut in lower contact assembly
B—Armature

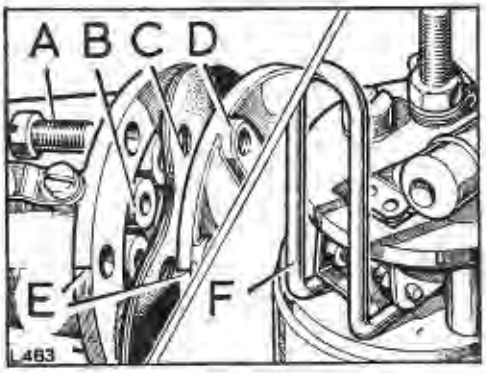


**Fig. L1-61. Assembling magnet housing**

A—Fixings, magnet housing to pump body
B—Rollers
C—Diaphragm and armature
D—Pump body
E—Alignment marks made previously
F—Special tool, Part No. 263058

13. Hold the magnet assembly in the left hand in an approximately horizontal position. Push the armature in firmly but steadily, with the thumb of the right hand.

14. If the contact breaker throws over, the armature should be screwed in further until it ceases to do so. It should then be unscrewed one-sixth of a turn at a time until a position is found at which the contact breaker just throws over, care being taken to avoid jerking the armature. The armature should then be unscrewed for two-thirds of a turn, i.e. four holes, the setting is then correct—do not forget that this setting must be carried out with the points out of contact.

15. When a new diaphragm is fitted, it is possible that considerable pressure will be required to push the armature right home. If there is any doubt about the point at which the contact throws over, come back one-sixth of a turn.

16. Place the magnet assembly in position on the pump body, aligning the drain hole at the bottom with the filter plug. Ensure that all the rollers remain in their correct position.

17. Insert the six securing screws but DO NOT tighten at this stage, as it is essential to first stretch the diaphragm to its outermost position using special tool, Part No. 263058.

    Insert the wedged fork of the special tool between the white rollers of the outer rocker and press in under the tips of the inner rocker until it lifts the trunnion in the centre of the inner rocker as far as it will go. Tighten the retaining screws fully, and remove the wedge.

    **Note:** If a wedge is not available, the diaphragm may be stretched by holding the points in contact, by inserting a matchstick under one of the white fibre rollers and passing a current through the pump; this will excite the magnet, actuate the armature, and so stretch the diaphragm.

18. It is now necessary to check that the top of the contacts inner rocker is in contact with the end face of the magnet housing. If there is a visible gap here, the six screws should be slackened off and then retightened until the correct condition is achieved.

19. Fit the spring blade contact and secure with a screw, together with the condenser and feed leads. The oversize anchor hole in the blade allows the contacts to be positioned so that a wiping action over the centre line of the contact faces takes place when the pump is operating.

### Contact point adjustment

20. Check the position by holding the blade in contact with the pedestal, being careful not to press on the overhanging portion, then ensure that .030 in. (0,75 mm) feeler just slides between the contact stops, as illustrated.

## Operation L1-7—*continued*

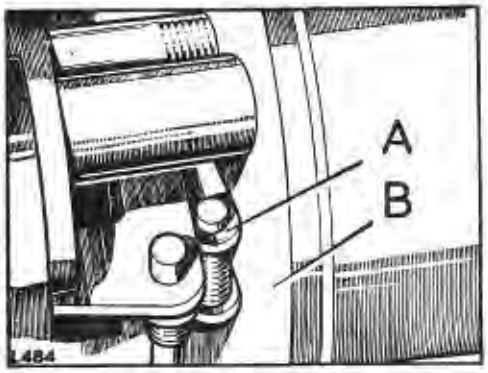


**Fig. L1-62. Checking inner rocker**

A—Inner rocker
B—End face of magnet housing

Adjustment may be carried out by bending the blade in order to obtain the correct clearance.

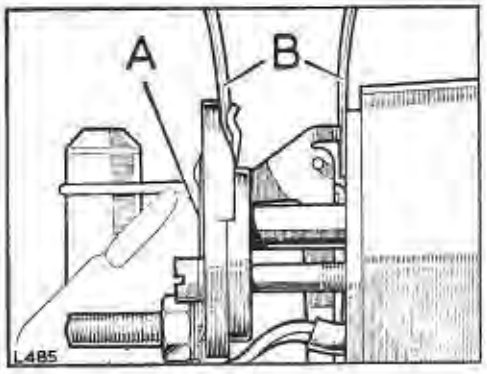


**Fig. L1-63. Checking contacts**

A—Contact blade
B—Feeler gauges, .030 in. (0.75 mm) minimum clearance

21. Test fuel pump. It is best to use a cut-away cover while testing the pump, as this prevents the hinge pin from falling out, and at the same time makes it possible to observe the action of the contact breaker. The pump should be mounted three feet above the supply tank for testing; either paraffin or petrol may be used. When switched on, the pump should prime itself promptly, and fluid should flow from the outlet union. If the pump outlet is restricted, the pump should slow down gradually, and if completely cut off it should stop for at least 15 seconds.
22. After test procedure refit top cover, Lucar blade and securing nut.

## Fuel tank, side mounted type, (Petrol and Diesel models), to remove and refit—Operation L1-8

Workshop hand tools:
Spanner sizes: 2 BA, $\frac{7}{16}$ in. AF, $\frac{1}{2}$ in. AF open end
Screwdriver (medium)

**To remove** (Fig. L1-64)

1. Disconnect the battery earth lead.
2. Drain fuel into a clean container.
3. Remove RH seat cushion and fold seat squab forward.
4. Disconnect hoses, tank to filler tube and breather hose.
5. Remove cover panel for fuel tank.
6. Disconnect wires at gauge unit.
7. Disconnect fuel supply pipe and for Diesel models. spill return pipes.
8. Support tank and remove tank securing bolts.
9. Lower tank and remove from under the vehicle.

**To refit**

1. Reverse removal procedure.
2. If the vehicle is a Diesel model, prime the fuel system. Operation L1-14.

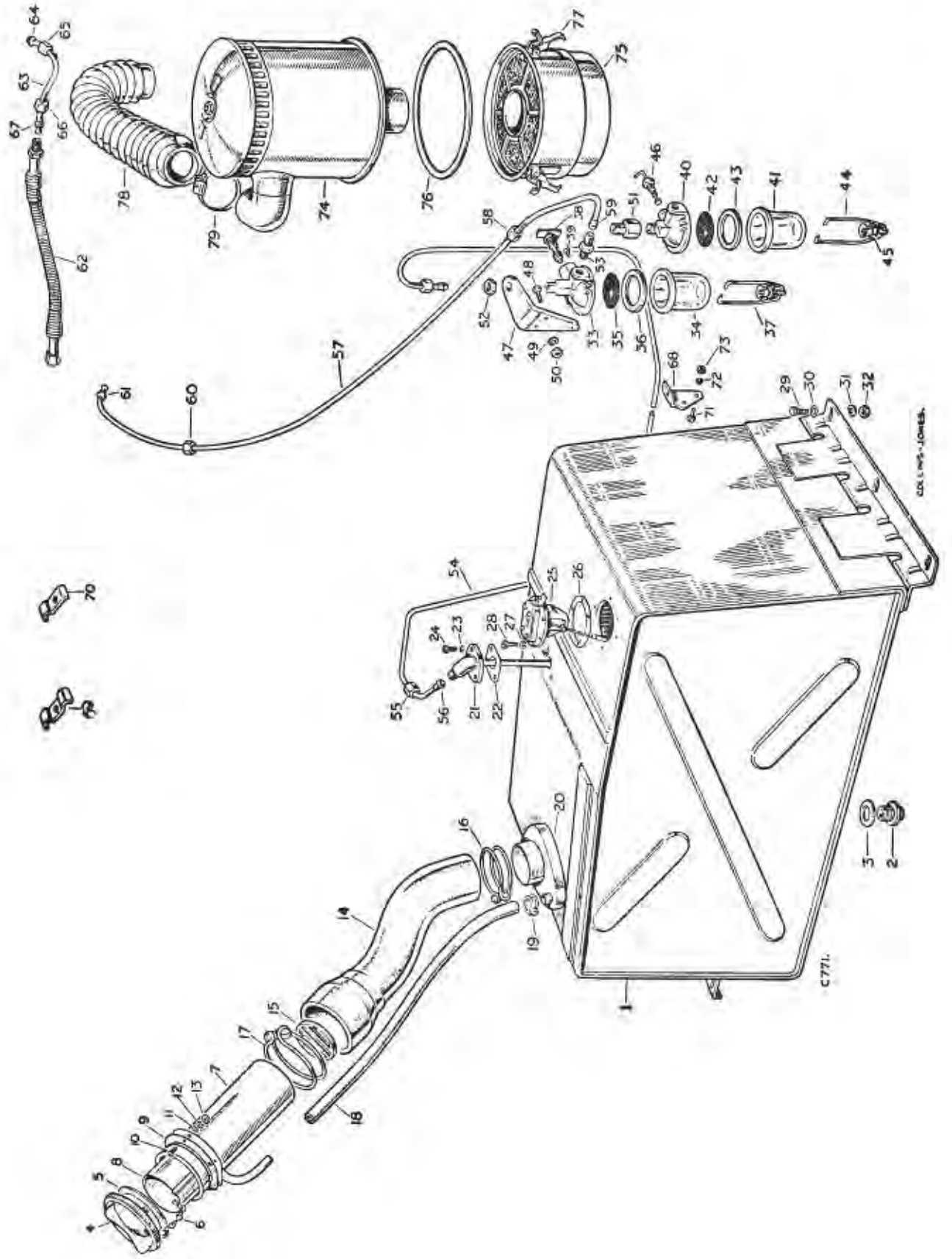


**Fig. L1-64. Layout of side mounted fuel tank, filter and pipes, 2½ litre Petrol and Diesel models**

**Key to layout of side mounted fuel tank, filter and pipes, 2½ litre Petrol and Diesel models**

1 Fuel tank complete
2 Drain plug for petrol tank
3 Joint washer for drain plug
4 Filler cap
5 Joint washer for cap
6 Chain for filler cap
7 Filler tube
8 Extension tube for filler
9 Grommet for fuel tank filler
10 Screw (2 BA x $\frac{3}{8}$ in. long) } Fixing filler to body side
11 Plain washer
12 Spring washer
13 Nut (2 BA)
14 Hose, tank to filler tube
15 Anti-theft grid for filler
16 Clip for hose, bottom
17 Clip for hose, top
18 Breather hose for fuel tank
19 Clip for breather hose
20 Rubber seal for filler pipe
21 Outlet elbow complete for tank
22 Joint washer for outlet and return elbow
23 Spring washer } Fixing elbow to tank
24 Screw (3 BA x $\frac{9}{16}$ in. long)
25 Gauge unit for fuel tank
26 Joint washer for gauge unit
27 Spring washer } Fixing gauge unit to tank
28 Screw (3 BA x $\frac{9}{16}$ in. long)
29 Bolt ($\frac{5}{16}$ in. UNF x $\frac{3}{4}$ in. long) } Fixing fuel tank to chassis frame
30 Plain washer
31 Spring washer
32 Nut ($\frac{5}{16}$ in. UNF)
33 Body only
34 Bowl only
35 Gauze for bowl
36 Joint washer for bowl
37 Retainer for bowl
38 Tap and gland complete
39 Special screw for tap
40 Body only
41 Bowl only
42 Gauze for bowl
43 Joint washer for bowl
44 Retainer for bowl
45 Screw cap for retainer
46 Tap and gland complete
47 Bracket for sediment bowl
48 Bolt ($\frac{1}{4}$ in. UNF x $\frac{9}{16}$ in. long) } Fixing bracket to dash
49 Spring washer
50 Nut ($\frac{1}{4}$ in. UNF)
51 Inlet adaptor for sediment bowl
52 Special nut fixing adaptor and bowl to bracket
53 Outlet union for sediment bowl
54 Petrol pipe complete, tank to bowl
55 Nut } Fixing pipe to tank and bowl
56 Nipple
57 Petrol pipe complete, bowl to pump
58 Nut } Fixing pipe to bowl and pump
59 Nipple
60 Nut
61 Olive
62 Flexible fuel pipe complete
63 Fuel pipe complete, flex to carburetter
64 Nipple } Fixing pipe to flex and carburetter
65 Nut
66 Nut
67 Olive
68 Fuel pipe retaining bracket
69 Clip for fuel pipes
70 Clip for fuel pipes
71 Bolt (2 BA x $\frac{1}{2}$ in. long) } Fixing clip and bracket to chassis crossmember
72 Spring washer
73 Nut (2 BA)
74 Air cleaner
75 Oil container
76 Washer for container
77 Toggle
78 Connection, air cleaner to carburetter
79 Clip fixing connection

## Fuel tank, rear mounted type, (Petrol and Diesel models), to remove and refit—Operation L1-9

Workshop hand tools:
Spanner sizes: $\frac{7}{16}$ in AF, $\frac{9}{16}$ in. AF open end
Screwdriver (medium)

**To remove** (Fig. L1-65)

1. Disconnect the battery.
2. Drain the fuel into a clean container.
3. Release the clip securing the filler tube hose to the tank.
4. Support the tank and remove the tank securing bolts, then lower the tank sufficient only to give access to the pipes and leads at the tank top.
5. Disconnect the breather and air balance pipes.
6. Disconnect wires at gauge unit.
7. Disconnect the fuel supply pipe, and for Diesel models, the spill return pipe.
8. Lower the tank and remove from under the vehicle.

**To refit**

1. Reverse the removal procedure.
2. If the vehicle is a Diesel model, prime the fuel system. Operation L1-14.

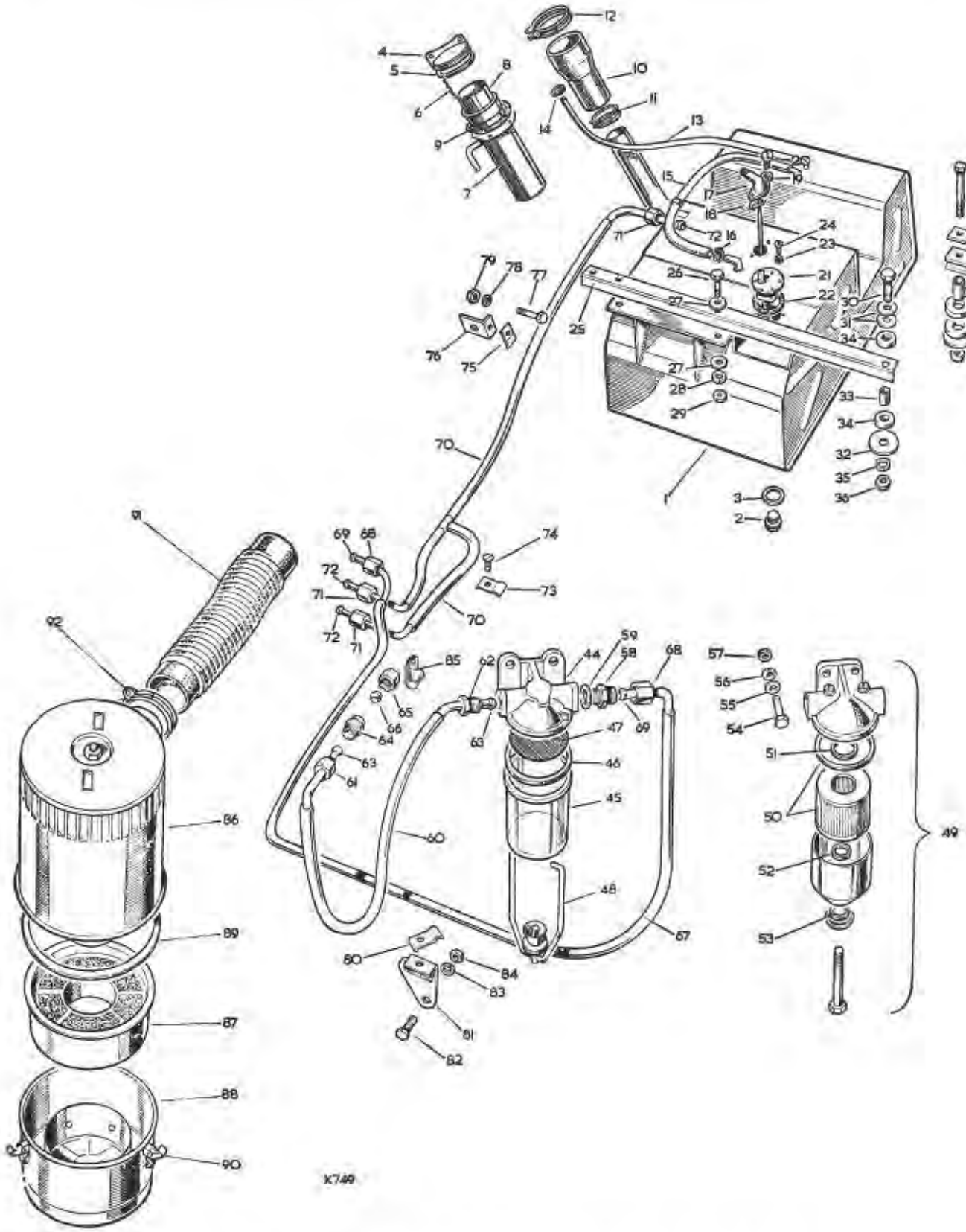


**Fig. L1-65. Layout of rear mounted fuel tank, filter and pipes, 2.6 litre models**
**Note:** This fuel tank is also fitted to 2¼ litre Station Wagon models

**Key to Fig. L1-65. Layout of rear mounted fuel tank, filter and pipes, 2.6 litre models**

1 Fuel tank complete
2 Drain plug } For
3 Joint washer } fuel tank
4 Filler cap
5 Joint washer for cap
6 Chain for filler cap
7 Filler tube
8 Extension tube for filler
9 Grommet for fuel tank filler
10 Hose, tank to filler tube
11 Clip for hose, bottom
12 Clip for hose, top
13 Breather hose for fuel tank
14 Clip for breather hose
15 Air balance hose for fuel tank
16 Clip for air balance hose
17 Outlet elbow complete for tank
18 Joint washer for outlet elbow
19 Spring washer } Fixing elbow
20 Screw (3 BA x $\frac{9}{16}$ in. long) } to tank
21 Gauge unit for fuel tank
22 Joint washer for gauge unit
23 Spring washer } Fixing gauge
24 Set screw (3 BA x $\frac{3}{8}$ in. long) } unit to tank
25 Support for fuel tank
26 Bolt ($\frac{3}{8}$ in. UNF x $\frac{3}{4}$ in. long) } Fixing support to tank
27 Plain washer
28 Spring washer
29 Nut ($\frac{3}{8}$ in. UNF)
30 Bolt ($\frac{3}{8}$ in. UNF x $1\frac{3}{8}$ in. long) } Fixing front of fuel tank to support and chassis frame
31 Plain washer, small
32 Plain washer, large
33 Distance tube
34 Rubber bush
35 Spring washer
36 Nut ($\frac{3}{8}$ in. UNF)
37 Bolt ($\frac{3}{8}$ in. UNF x $2\frac{1}{2}$ in. long) } Fixing rear of fuel tank to support and chassis frame
38 Distance piece
39 Distance piece
40 Distance tube
41 Mounting rubber
42 Plain washer
43 Self-locking nut ($\frac{3}{8}$ in. UNF)
44 Body only
45 Bowl only
46 Joint washer for bowl
47 Gauze for bowl
48 Retainer for bowl
49 Fuel filter complete
50 Element and seal for filter
51 Centre seal, upper
52 Centre seal, lower
53 Seal for centre bolt
54 Bolt ($\frac{1}{4}$ in. UNF x $\frac{7}{8}$ in. long) } Fixing fuel filter to RH toe box
55 Plain washer
56 Spring washer
57 Nut ($\frac{1}{4}$ in. UNF)
58 Double-ended union for filter or bowl
59 Joint washer for union
60 Petrol pipe, nylon, filter or bowl to carburetter
61 Nut, pipe to carburetter union
62 Nut, pipe to filter or bowl
63 Olive
64 Union for petrol pipe
65 Nut } Fixing union
66 Olive } to carburetter
67 Petrol pipe, nylon, pump to filter or bowl
68 Nut } Fixing pipe to
69 Olive } pump and filter
70 Petrol pipe, nylon, tank to pump
71 Nut } Fixing pipe
72 Olive } to pump
73 Clip } Fixing fuel pipe to
74 Drive screw } chassis sidemember
75 Clip } Fixing fuel pipe to body support bracket
76 Bracket
77 Bolt (2 BA x $\frac{5}{8}$ in. long)
78 Spring washer
79 Nut (2 BA)
80 Clip } Fixing fuel pipe to chassis crossmember
81 Bracket
82 Bolt (2 BA x $\frac{1}{2}$ in. long)
83 Spring washer
84 Nut (2 BA)
85 Clip fixing fuel pipe to hand brake bracket
86 Air cleaner, AC 7964695
87 Element for air cleaner, AC 7222911
88 Oil container, AC 7964699
89 Washer for container, AC 1574943
90 Toggle, AC 1579211
91 Connection, air cleaner to carburetter adaptor or elbow
92 Clip, fixing connection to air cleaner and adaptor

## Fuel tank gauge unit, (Petrol and Diesel models), side mounted type tank, to remove and refit—Operation L1-10

Workshop hand tools:
Spanner size: $\frac{7}{16}$ in. AF open end
Screwdriver (medium)

**To remove** (Fig. L1-64)

Before attempting to remove gauge unit ensure that the level of fuel in the tank does not exceed $\frac{3}{8}$ full.

1. Disconnect battery.
2. Remove RH seat cushion and tank cover panel.
3. Disconnect wires at gauge unit.
4. Mark position of unit in relation to tank.
5. Remove securing screws and lift unit from tank.

**To refit**

1. Fit new gasket and reverse removal procedure, ensuring correct alignment.

## Fuel tank gauge unit, (Petrol and Diesel models), rear mounted type tank, to remove and refit—Operation L1-11

Workshop hand tools:
Spanner sizes: $\frac{7}{16}$ in. AF, $\frac{9}{16}$ in. AF
Screwdriver (medium)

**To remove** (Fig. L1-65)

1. Remove the fuel tank, Operation L1-9.
2. Mark position of unit in relation to tank.
3. Remove securing screws and lift unit from tank.

**To refit**

1. Fit new gasket and reverse the removal procedure, ensuring unit is correctly aligned.

## Fuel filter, to clean, remove and refit, Petrol models—Operation L1-12

Workshop hand tools:
Spanner sizes: $\frac{7}{16}$ in. AF, $\frac{1}{2}$ in. AF, $\frac{5}{8}$ in. AF, $\frac{9}{16}$ in. AF open end

### Fuel pump filter and sediment bowl (2½ litre Petrol)

#### To remove and clean

1. Unscrew the nut at base of sediment bowl, move the retainer aside and withdraw the bowl, sealing gasket and gauze filter disc. Care must be taken to prevent damage to the filter disc.
2. Clean the bowl and filter disc in petrol, directing a compressed air jet on the gauze to remove any obstinate particles.
3. Examine the cork gasket for filter bowl and renew if signs of deterioration are evident.

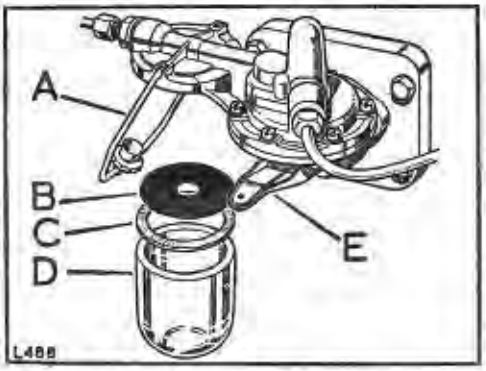


**Fig. L1-66. Removing sediment bowl**
A—Retainer for sediment bowl
B—Filter gauze
C—Cork gasket
D—Sediment bowl
E—Hand priming lever

#### To replace

1. Reverse the removal procedure ensuring that the gauze filter disc fits tightly round the inlet neck and is quite undamaged in any way.

### Fuel filter (2.6 litre Petrol models)

There are two types of filter in use, see Fig. L1-65

#### A—Sediment bowl type filter

#### To clean

1. Unscrew the nut at base of sediment bowl, move the retainer aside and withdraw the bowl, sealing gasket and gauze filter disc. Care must be taken to prevent damage to the filter disc.
2. Clean the bowl and filter disc in petrol, directing a compressed air jet on the gauze to remove any obstinate particles.
3. Examine the gasket for filter bowl and renew if signs of deterioration are evident.

#### To replace

1. Reverse the removal procedure ensuring that the gauze filter disc fits tightly round the inlet neck and is quite undamaged in any way.

#### To remove

1. Disconnect the fuel inlet and outlet pipes from the filter body.
2. Remove the fixings securing filter to toe box and lift clear.

#### To refit

1. Reverse the removal procedure.

#### B—Cartridge element type filter

#### To clean

1. Unscrew the centre bolt and withdraw filter bowl complete with small sealing ring at top of element.
2. Remove and discard filter element.
3. Withdraw the large sealing ring from the underside of the filter body.
4. Wash the filter bowl in clean fuel.
5. Renew the centre sealing rings if their condition is in any way doubtful. A new top sealing ring is supplied with each new element and should always be used.
6. Fit the new element, top sealing rings and refit the bowl.

#### To remove

1. Disconnect the fuel inlet and outlet pipes from the filter body.
2. Remove the fixings securing filter to toe box and lift clear.

#### To refit

1. Reverse the removal procedure.

## Fuel pipes and hoses, (Petrol and Diesel models), to remove and refit —Operation L1-13

Workshop hand tools:
Spanner sizes: 2 BA, $\frac{7}{16}$ in. AF, $\frac{1}{2}$ in. AF, $\frac{5}{8}$ in. AF, $\frac{9}{16}$ in. AF open end
Screwdriver (medium)

**Filler tube and hose** (Figs. L1-64 and L1-65)

**To remove**

1. Disconnect battery earth lead.
2. Side mounted fuel tank—Remove RH seat cushion and fold seat squab forward. Remove filler hose cover from behind RH seat.
3. Release the upper and lower hose clips securing the filler hose to the filler tube and fuel tank.
4. Release the hose clip securing the breather hose to the filler tube.
5. Remove the fixings securing the filler tube to the body, then withdraw the filler tube and hose.

**To refit**

1. Refit by reversing the removal procedure.

**Breather and air balance pipes** (Figs. L1-64 and L1-65)

**To remove**

1. Disconnect the battery earth lead.
2. Side mounted fuel tank—Remove RH seat cushion and fold seat squab forward. Remove filler hose cover from behind RH seat. Remove upper and lower hose clips and withdraw breather hose.
3. Rear mounted fuel tank--Remove fuel tank, Operation L1-9. Release the clip and withdraw the breather hose from the filler tube. Release the clip and withdraw the air balance hose from the fuel tank.

**To refit**

1. Reverse the removal procedure, ensuring hose clips are secure.

**Fuel supply pipes** (Figs. L1-64 and L1-65)

**To remove**

The fuel supply and spill return pipes comprise short metal pipes, secured to the fuel system units by unions and nuts, interconnected by flexible hoses.

1. Side mounted fuel tank—Remove RH seat cushion and cover for fuel tank.
2. Rear mounted fuel tank—Remove tank, Operation L1-9.
3. Early type flexible hoses—Loosen clips securing the hoses to metal pipes and withdraw hoses.
4. Latest type (black nylon) flexible hoses—Withdraw hoses which are a push fit on the metal pipes.
5. Remove the metal pipes as required.

**To refit**

1. Refit by reversing the removal procedure.

   **Note:** Fitting the black nylon type pipes can be facilitated by warming the end immediately prior to fitting. DO NOT use a naked flame near the fuel tank or any components containing fuel.

2. If the vehicle is a Diesel model, prime the fuel system, Operation L1-14.

## Diesel fuel system—General notes

### General

If the injection pump is drained by disconnecting the drain pipe or by running the vehicle until all the fuel has been used, the injection pump **must** be primed before attempting to restart the engine. To minimise the possibility of inadvertently running out of fuel, a blue fuel level warning light is fitted to the instrument panel which glows when only two gallons of fuel remain in the tank and remains 'on' until more fuel is added. This device is in addition to the usual fuel contents gauge.

Clean fuel is essential for the efficient operation of the fuel injection pump and injection nozzle assemblies, and for this reason a minimum of three filters are fitted in the system. All export models have four filters.

The first one is fitted in the fuel tank and requires no attention. Early models have a second—a sediment bowl and filter disc—incorporated with the fuel lift pump, the third (second for latest models) is a large self-contained unit mounted on the RH front side of the engine on early models, and on the bulkhead on later vehicles and lastly a small tubular gauze filter is fitted in the injection pump head.

An additional filter is fitted to all export Diesel Land-Rovers. Early models have a paper element type filter mounted on the dash panel, later models have a sedimentor type filter mounted on the right-hand side of the chassis.

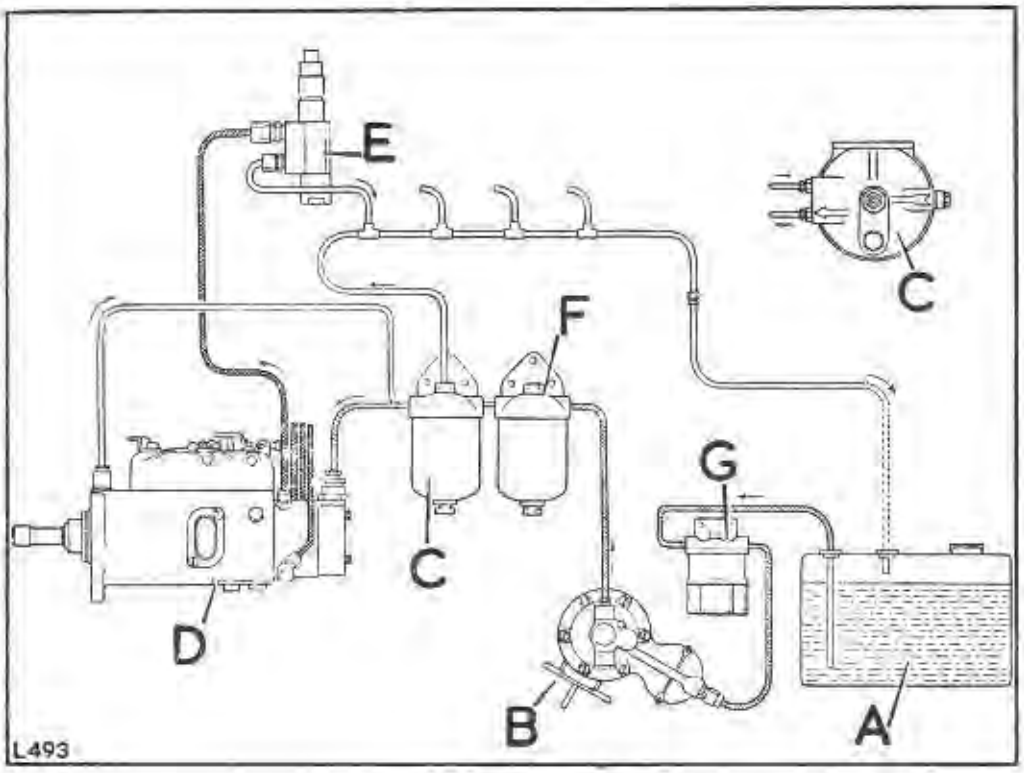


**Diagram of fuel system**

A—Fuel tank
B—Fuel pump
C—Main filter
D—Injection pump
E—Injection nozzle
F—Additional filter (early export models)
G—Sedimentor (latest export models)
/////—Low pressure delivery
xxxxxx—High pressure delivery
= = = =—Excess fuel spill back

### Fuel filters

Wear of injection pump, injection nozzle parts and the subsequent loss of power and efficiency is primarily due to the presence of dirt in the fuel.

Filters are situated in the Rover system in a manner calculated to minimise the possibility of foreign matter reaching the injection pump or injection nozzles, but the element in the main filter must be renewed, the sediment bowl and filter gauze on lift pump and the filter gauze in injection pump cleaned, at appropriate intervals. These intervals vary and are dependent on operating conditions, but reference to the Owner's Instruction Manual will provide a guide.

Complete sludging up of the main filter element in an unreasonably short operating period is usually due to an excessive quantity of wax in the fuel. Attention should be paid to the method of storage (where bulk storage is used) and the advice of supplier requested. Never draw fuel from the **lowest** point of a storage tank or barrel for refuelling purposes; the lowest point should only be used for draining off sludge and other impurities which accumulate at the bottom end.

### Distributor pump

No attempt should be made to overhaul the distributor pump, as this requires specialised knowledge and equipment outside the scope of this manual. If a distributor pump gives trouble, a new replacement should be fitted. For removal, refitting and setting instructions, Section A refers.

### Fuel injectors

Two types of fuel injector are in use, differing mainly in method of fixing to the cylinder head. All injectors have the 'Pintaux' type nozzle which has been developed by CAV for use with the design of cylinder head used on Rover compression ignition engines. This type of nozzle has been found most satisfactory for starting and general running and must be replaced by the same type.

### Air cleaner

All details and instructions for air cleaners are included in Section A.

### Fuel lift pump

The fuel lift pump is secured directly to the right-hand side of the engine, and is mechanically operated from the engine camshaft. The pump is similar to that used on $2\frac{1}{4}$ litre Petrol models and complete overhaul instructions are given in Operation L1-5.

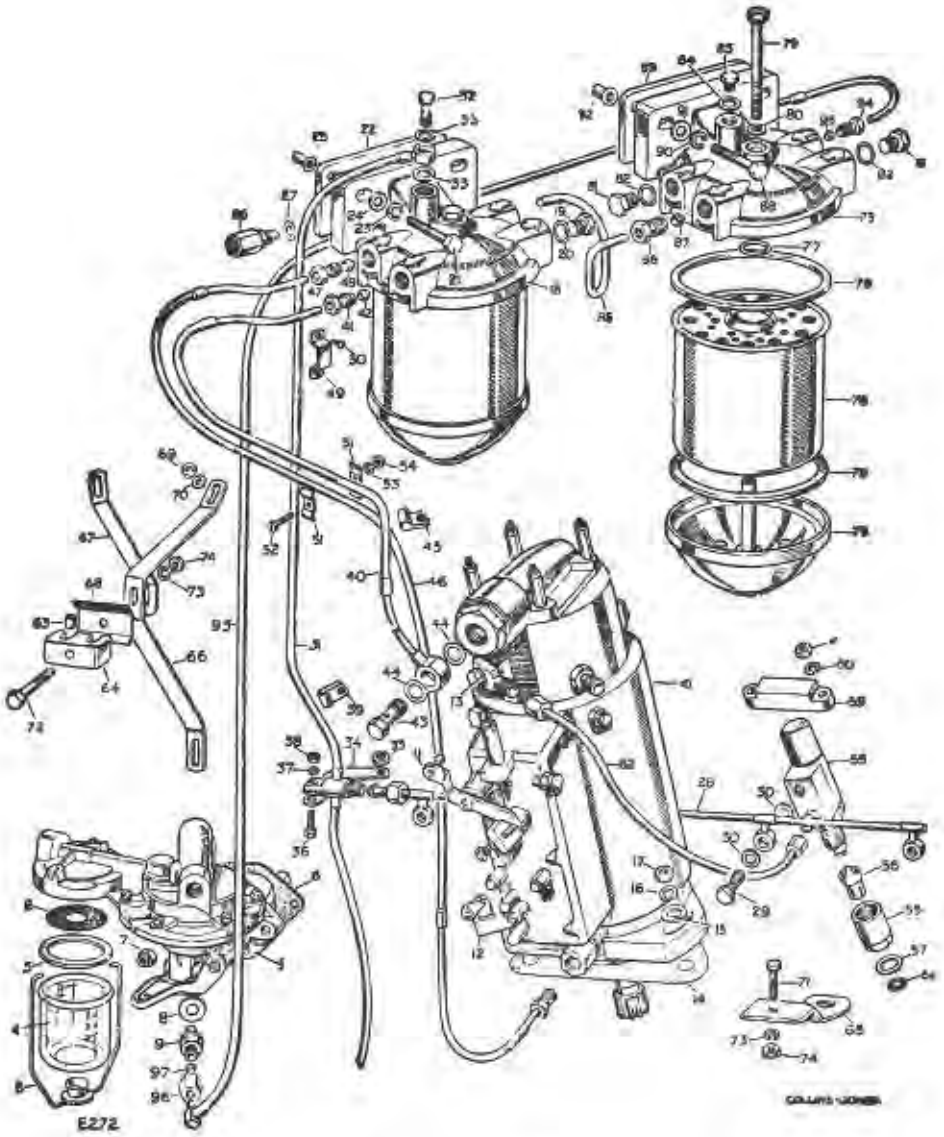


**Fig. L1-68. General layout of Diesel fuel system, early models, twin filters illustrated**

**Key to Fig. L1-68. General layout of Diesel fuel system, early models**

1 Fuel pump, mechanical
2 Filter for sediment bowl
3 Washer for sediment bowl
4 Sediment bowl
5 Retainer
6 Joint washer
7 Self-locking nut
8 Joint washer } For mechanical pump
9 Union } inlet and outlet
10 Distributor pump
11 Accelerator control lever } For distributor
12 Stop lever } pump
13 Joint washer for injection pipe, distributor pump end
14 Joint washer
15–17 Fixings, distributor pump to cylinder block
18 Fuel filter
19 Plug for filter
20 Joint washer
21–25 Fixings, filter to dash
26 Non-return valve for filter
27 Joint washer
28 Leak-off pipe
29 Banjo bolt } Fixings, leak-off
30 Washer } pipe to injector
31 Fuel pipe, spill return to tank
32 Banjo bolt } Fixing spill return
33 Joint washer } pipe to filter
34 Bracket for leak-off pipe
35 Locknut fixing bracket to injector stud
36–38 Fixings, spill return pipe to bracket on injector stud
39 Clip
40 Fuel pipe, filter to distributor pump
41 Nut } Fixing pipe
42 Olive } to filter
43 Banjo bolt } Fixing pipe to
44 Joint washer } distributor pump
45 Clip, fixing pipe to distributor pump
46 Fuel pipe, distributor pump return to filter
47 Nut } Fixing pipe to non-return
48 Olive } valve at filter
49 Clip
50 Drive screw } Fixing distributor pump
51 Double pipe clip } feed and return pipes together
52–54 Fixings, pipes and clips
55 Injector
56 Nozzle
57 Joint washer, copper } For
58 Joint washer, steel } injector
59 Clamping strip for injector
60–61 Fixings, injector to cylinder head
62 Injector pipe to No. 2 cylinder
63 Damper for injector pipe
64 Shroud
65 Bracket
66 Support strap } For shroud
67 Steady strap
68 Backplate
69–70 Fixings, straps to injector studs
71–74 Fixings, shroud and dampers to backplate, strap and support bracket
75 Fuel filter
76 Element
77 Seal, small } For
78 Seal, large } element
79 Special centre bolt for filter
80 Washer for centre bolt
81 Plug for fuel filter
82 Joint washer
83 Plug for fuel filter, top, leak-off } Additional fuel filter
84 Joint washer for leak-off plug
85 Transfer pipe, extra filter to basic filter
86 Nut } Fixing pipe
87 Olive } to filter
88–92 Fixings, filter to dash
93 Fuel pipe, pump to filters
94 Nut } Fixing pipe
95 Olive } to filter
96 Nut } Fixing pipe
97 Olive } to pump

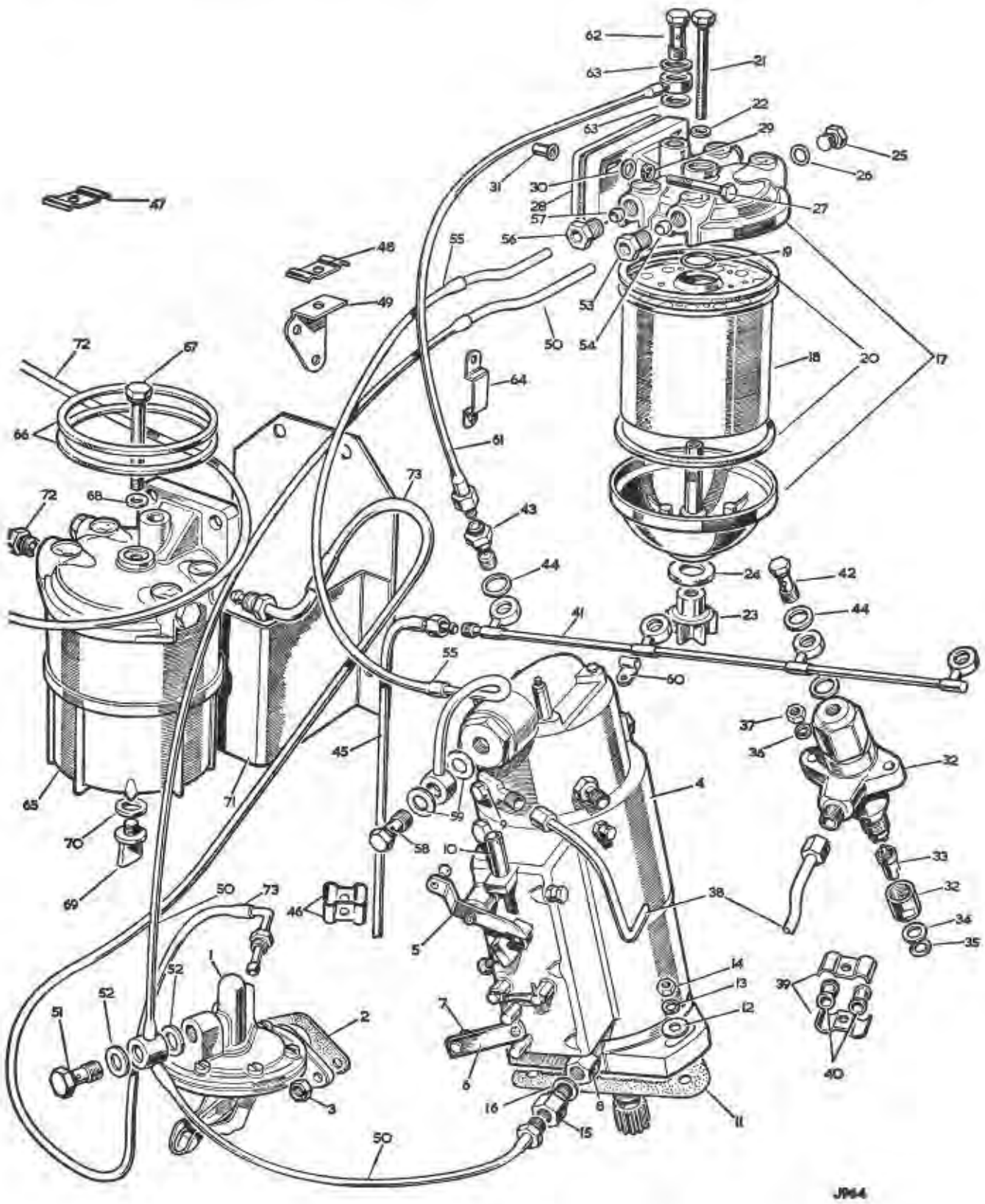


Fig. L1-69. General layout of Diesel fuel system, latest models

**Key to Fig. L1-69. General layout of Diesel fuel system, latest models**

1 Fuel pump, mechanical
2 Joint washer, fuel pump to cylinder block
3 Self-locking nut, fixing fuel pump
4 Distributor pump
5 Accelerator control lever
6 Stop lever
7 Swivel clamp for stop lever
8 Union, fuel pipe connection
(5–8: For distributor pump)
9 Joint washer for injection pipe, distributor pump end
10 Sleeve for control lever stop screw
11 Joint washer for distributor pump
12 Plain washer
13 Spring washer
14 Nut ($\frac{5}{16}$ in. UNF)
(12–14: Fixing distributor pump to cylinder block)
15 Non-return valve for distributor pump
16 Joint washer for non-return valve
17 Fuel filter
18 Element for fuel filter
19 Seal for element, small
20 Seal for element, large
21 Special centre bolt for filter
22 Washer for centre bolt
23 Nylon drain plug for filter
24 Rubber seal for drain plug
25 Plug for filter
26 Joint washer for plug
27 Bolt ($\frac{5}{16}$ in. UNF x $1\frac{1}{8}$ in. long)
28 Distance plate
29 Spring washer
30 Plain washer
31 Rivnut ($\frac{5}{16}$ in. UNF)
(27–31: Fixing filter to dash)
32 Injector complete
33 Nozzle for injector
34 Joint washer for injector, copper
35 Joint washer for injector, steel
36 Spring washer
37 Nut ($\frac{5}{16}$ in. UNF)
(36–37: Fixing injectors to cylinder head studs)
38 Injector pipe to No. 2 cylinder
39 Clamping plate for injector pipe grommet
40 Grommet for injector pipe
41 Spill rail pipe complete
42 Banjo bolt for No. 1, 2 and 3 injectors
43 Banjo union for No. 4 injector
44 Joint washer for banjo bolt
(42–44: Fixing spill rail pipe to injectors)
45 Fuel pipe, spill return to tank
46 Double clip, clamping feed and return pipes together
47 Double clip, fixing feed and return pipes to chassis sidemember
48 Double clip for feed and return pipes
49 Bracket for clip
50 Fuel pipe, mechanical pump and distributor pump to filter
51 Banjo bolt
52 Joint washer
(51–52: Fixing fuel pipe to mechanical pump)
53 Nut
54 Olive
(53–54: Fixing pipe to filter)
55 Fuel pipe, filter to distributor pump
56 Nut
57 Olive
(56–57: Fixing pipe to filter)
58 Banjo bolt
59 Joint washer
(58–59: Fixing pipe to distributor pump)
60 Clip, fixing fuel pipe to distributor pump
61 Fuel pipe filter to spill rail at No. 4 injector
62 Banjo bolt
63 Joint washer
(62–63: Fixing fuel pipe to filter)
64 Double clip, fixing fuel pipes to bulkhead
65 Sedimentor
66 Seal for sedimentor
67 Special centre bolt for sedimentor
68 Washer for centre bolt
69 Drain plug for sedimentor
70 Rubber seal for drain plug
71 Mounting bracket for sedimentor
72 Fuel pipe, tank to sedimentor
73 Fuel pipe, sedimentor to mechanical pump

## Priming the fuel system—Operation L1-14

Workshop hand tools:
Spanner sizes: $\frac{5}{16}$ in. AF, $\frac{7}{16}$ in. AF open end

### Priming the fuel system, early type filter

A—When the filter bowl has been cleaned or the paper element changed on **either or both** fuel filters, the system must be primed as follows:

1. Do not attempt to start the engine hoping to draw the fuel through in this way, otherwise the full priming procedure will be necessary.
2. Slacken the air vent screw on the top of the engine filter. See Fig. L1-71.
3. Operate the hand priming lever in the mechanical pump until fuel free from bubbles emerges.
4. Tighten the bleed screw.
5. Operate the hand priming lever once or twice to clear the last bubbles of air into the filter bleed pipe.
6. Start the engine in the normal way and check for leaks.

B—When fuel system has been completely emptied, proceed as follows:

7. Carry out operations above 1 to 5 inclusive.

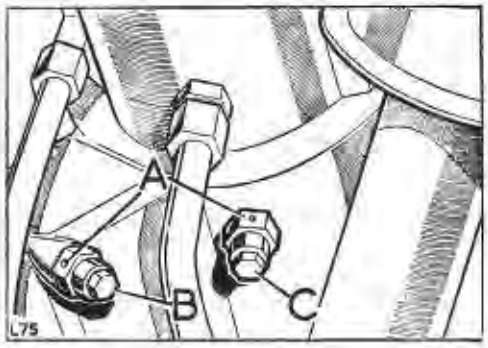


**Fig. L1-70. Priming the distributor pump**

A—Fuel orifice
B—Air vent screw on distributor
C—Air vent screw on distributor control cover

8. Release air vent screw on distributor pump.
9. Operate the fuel pump hand priming lever until fuel free of air emerges.
10. Retighten the air vent screw.
11. To ensure that all air is exhausted from the pump it may also be necessary to slacken air vent screw in the distributor control cover and repeat items 9 and 10.
12. Start engine in normal way and check for leaks.

C—When distributor pump only has been drained it is only necessary to carry out operations 8 to 12 inclusive.

Ensure that fuel pump lever is on the bottom of the operating cam when priming the fuel system, otherwise maximum movement of the priming lever will not be obtained.

### Priming the fuel system, latest type filters (single or twin filter, or filter and sedimentor system)

A—When the filter bowl has been cleaned or the paper element changed on **either or both** fuel filters, the system must be primed as follows:

When models fitted with a sedimentor have had the water drained only, from the sedimentor bowl, no priming is necessary as the water is replaced by fuel automatically syphoned from the tank. However, if the sedimentor has been dismantled or air has entered the body, then the system must be primed as follows:

1. Do not attempt to start the engine hoping to draw the fuel through in this way, otherwise the full priming procedure will be necessary.
2. Slacken the bleed pipe or air vent screw as the case may be, on the top of the filter which has had the replacement element fitted.
3. Operate the hand priming lever on the mechanical pump, until fuel free from bubbles emerges.
4. Tighten the bleed pipe or air vent screw.
5. Operate the hand priming lever once or twice to clear the last bubbles of air into the filter bleed pipe.
6. Start engine in normal way and check for leaks.

B—When fuel system has been completely emptied proceed as follows:

7. Carry out operations above, 1 to 5 inclusive.
8. Release air vent screw 'B' on distributor body. See Fig. L1-70.

## Operation L1-14—*continued*

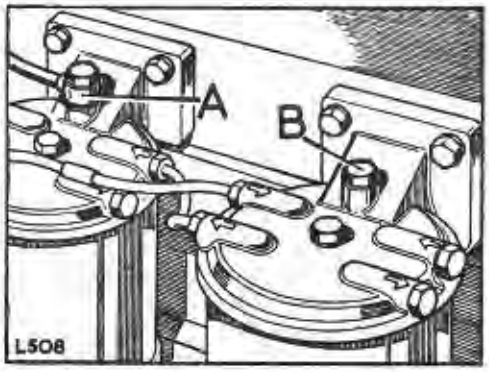


**Fig. L1-71. Air vent on filter (Twin filter system illustrated)**

A—Bleed pipe
B—Air vent screw

9. Operate the fuel pump hand priming lever until fuel free of air emerges.
10. Retighten the air vent screw.
11. To ensure that all air is exhausted from the pump it may also be necessary to slacken air vent screw 'C' in the distributor control cover and repeat items 9 and 10.
12. Start the engine in the normal way and check for leaks.

C—When distributor pump only has been drained it is only necessary to carry out operations 8 to 12 inclusive.

Always ensure that fuel pump lever is on the bottom of the operating cam when priming the fuel system, otherwise maximum movement of the priming lever will not be obtained.

## Fuel filters, to clean, remove and refit, Diesel models—Operation L1-15

Workshop hand tools:
Spanner sizes: $\frac{7}{16}$ in. AF, $\frac{1}{2}$ in. AF, $\frac{5}{8}$ in. AF, $\frac{9}{16}$ in. AF open end

### Fuel pump filter and sediment bowl (early models)

**To remove and clean**

1. Unscrew the nut at base of sediment bowl, move the retainer aside and withdraw the bowl, sealing gasket and gauze filter disc. Care must be taken to prevent damage to the filter disc.
2. Clean the bowl and filter disc in Diesel fuel oil, directing a compressed air jet on the gauze to remove any obstinate particles.
3. Examine the cork gasket for filter bowl and renew if signs of deterioration are evident.

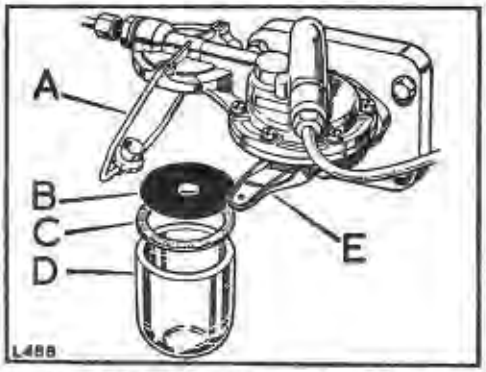


**Fig. L1-72. Removing sediment bowl**
A—Retainer for sediment bowl
B—Filter gauze
C—Cork gasket
D—Sediment bowl
E—Hand priming lever

**To replace**

1. Reverse the removal procedure ensuring that the gauze filter disc fits tightly round the inlet neck and is quite undamaged in any way.

### Main filter, early type, engine mounted

**To remove**

1. Slacken the drain plug at the base of filter container and allow fuel to flow into a suitable receptacle.
2. Disconnect the fuel inlet, outlet and bleed back pipes.
3. Remove the securing bolts and lift the assembly clear.

   A non-return valve is incorporated in the excess fuel spill back pipe. It can be removed by disconnecting the union at the top of the filter, and withdrawing the valve complete with holder.

**To refit**

1. Reverse the removal procedure.
2. Prime the fuel system. Operation L1-14.

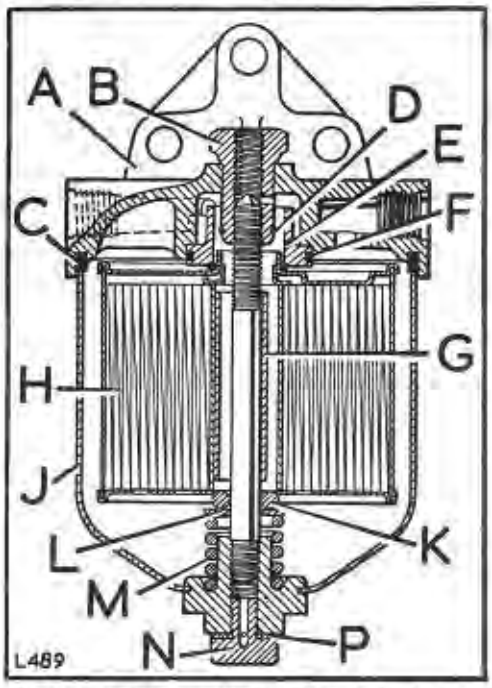


**Fig. L1-73. Sectioned view of main fuel filter, early type**

| | |
|---|---|
| A—Housing cover | H—Element |
| B—Cap nut | J—Container |
| C—Oil seal | K—Seal |
| D—Circlip | L—Plain washer |
| E—Sealing ring | M—Spring |
| F—Oil seal | N—Drain plug |
| G—Location sleeve | P—Washer |

**To remove element, filter in position on vehicle, early type**

1. Slacken the plug at base of filter container and allow the fuel to flow into a suitable receptacle.
2. Disconnect the bleed back pipe from the top of filter unit.
3. Unscrew the centre cap nut at top of filter whilst supporting the container.
4. Withdraw the container complete with small sealing ring at top of element and remove the large sealing ring from the underside of filter cover.
5. Discard the filter element, then wash the container thoroughly in fuel oil. Clean the holes in drain plug and boss with a wire. Great care should be taken to ensure that the centre spindle above lower sealing ring is absolutely clean.

## Operation L1-15—*continued*

6. Renew the lower sealing ring if its serviceability is in any way doubtful—a new top sealing ring is supplied with each element and should always be used.
7. Examine the large sealing gasket for container and replace if necessary.
8. Fit the new element, top sealing rings, and refit container.
9. Reconnect pipes, tighten drain plug and prime the fuel system. Operation L1-14.

### Main filters, late type

The latest type installation can be identified by the black nylon fuel pipes and the fact that the main fuel filter is no longer attached directly to the engine, but is fitted to the dash. The design of the later filter uses the outer casing of the filter element as an extension of the element holder, thus making it impossible to run the vehicle without a filter element in the system.

### To renew

1. Support element holder and unscrew the special bolt on the top of the filter; the element holder can now be removed.
2. Remove and discard the used element.
3. Wash the element holder in fuel oil.
4. If necessary, renew both the large rubber washer and the small rubber washer in the filter top, also renew the large rubber washer in the element holder.

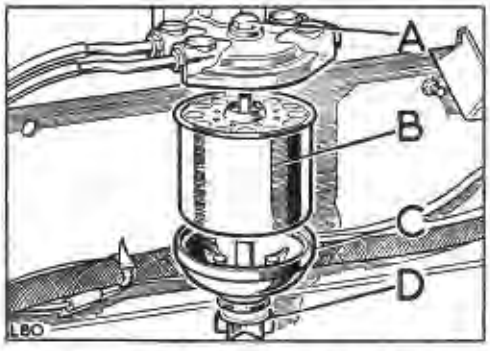


**Fig. L1-74. Main fuel filter, latest type**

A—Element retaining bolt
B—Element
C—Element holder
D—Water drain plug

5. Push the element on to the filter top spigot, with the perforated holes in the element to the top.
6. Fit the element holder to the bottom of the element and secure with the special bolt.
7. Prime the fuel system. Operation L1-14.

### Additional filter

All export models are fitted with an additional fuel filter. Early models have a paper element type fuel filter mounted on the engine side of the dash panel. Latest models have a sedimentor type filter mounted on the RH side chassis member, adjacent to cab door.

### Early models

The paper element type fuel filter used on early models is of the same type as the main fuel filter, late type, as already described. The two filters are mounted alongside on the engine side of the dash panel, and the instructions given for the main fuel filter also apply to the additional fuel filter.

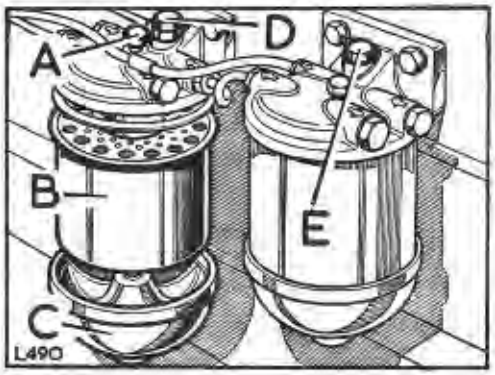


**Fig. L1-75. Paper element filter, twin system illustrated**

A—Element retaining bolt
B—Element
C—Element holder
D—Bleed pipe
E—Air vent screw

### Latest models

The sedimentor increases the working life of the main fuel filter by removing the larger droplets of water and larger particles of foreign matter from the fuel.

## Operation L1-15—*continued*

**Drain off water as follows:**

Slacken off drain plug to allow water to run out.

When pure diesel fuel is emitted, tighten drain plug.

**Dismantle and clean as detailed below:**

1. Disconnect fuel pipe inlet pipe at sedimentor and raise pipe above level of fuel tank to prevent draining from tank. Support in this position.

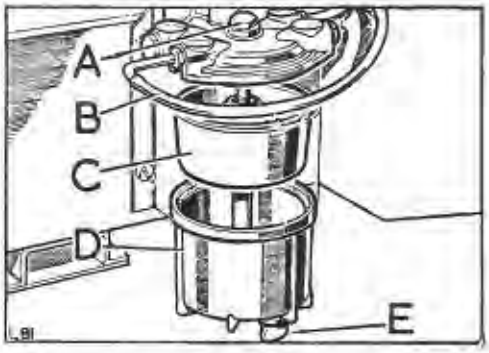


**Fig. L1-76. Fuel sedimentor**

A—Retainer bolt
B—Inlet pipe
C—Element
D—Bowl
E—Water drain plug

2. Support sedimentor bowl and unscrew special bolt on top of unit. The lower chamber, bowl and element can now be removed.
3. Clean all parts in petrol.
4. Fit new oil seals and reverse removal procedure.
5. Prime the system and check for air leaks. Operation L1-14.

**To remove**

1. Disconnect fuel inlet pipe at sedimentor and raise pipe above level of fuel tank to prevent draining from tank. Support in this position.
2. Drain the sediment trap into a suitable container by unscrewing the drain plug.
3. Remove right-hand floorboard above sediment trap.
4. Disconnect outlet pipe.
5. Remove securing screws and remove sediment trap.

**To refit**

1. Secure sediment trap to chassis bracket.
2. Reconnect inlet and outlet pipes.
3. Refit right-hand floorboard.
4. Prime fuel system. Operation L1-14.

**Injection pump filter**

**To remove and clean**

1. Remove the pipe filter to injection pump.
2. Unscrew the pipe connection from injection pump head and withdraw the filter.
3. Wash the filter in fuel oil and direct an air jet on to it.

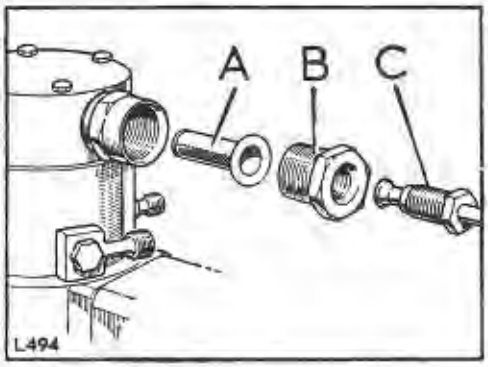


**Fig. L1-77. Injection pump filter**

A—Filter B—Connection
C—Inlet pipe

**To refit**

1. Replace the filter and pipe connection and reconnect the feed pipe at main filter end. Operate the lift pump by hand and couple the pipe to injection pump head whilst fuel flows from the pipe.

## Fuel injectors, Diesel models, to overhaul—Operation L1-16

*(For removal and refitting instructions, Section A refers)*

Workshop hand tools:
Spanner sizes: $\frac{3}{4}$ in. AF, 1 in. AF open end

Special tools:
271483 Testing outfit
271482 Spanner for nozzle cap
271484 Cleaning outfit for injectors
276278 Safety can
278181 Tool for flushing injector nozzles
278182 Adaptor for injector

### General

The nozzle is a hard working precision made valve, opening approximately 1,800 times a minute at full throttle and it is essential that it is treated with great care at all times.

The 'Pintaux' type nozzle has been developed by CAV for use with the type of cylinder head chosen for Rover CI engines. This type of nozzle has been found most satisfactory for starting and general running and must be replaced by the same type only.

### Checking nozzle assemblies on vehicle

When an injection nozzle is considered to be the cause of irregular running and loss of power, a quick check may be made by loosening the fuel feed pipe union nut on each nozzle in turn, whilst the engine is idling and again at approximately 1,000 rpm.

If the injection nozzle assembly being checked has been operating properly, there will be a distinct reduction in rpm accompanied by obvious roughness, but a faulty injection nozzle may make little or no difference to the engine note when its fuel feed pipe is loosened.

### Testing nozzle assemblies on vehicle

1. Remove the fuel spill gallery pipe complete, from the injection nozzles, then disconnect the fuel feed pipe (injection pump to nozzle) from the nozzle to be tested and from the injection pump.
2. Release the fixings and withdraw the suspected injection nozzle assembly; reconnect the pipe and nozzle assembly to the injection pump in a position whereby fuel ejection may be observed.
3. Loosen the union nuts securing the remaining fuel pipes to injection nozzles.
4. Whilst the starter turns the engine over, observe the manner in which fuel issues from the nozzle and compare the spray form with section 'A' of Fig. L1-87.

   Very little fuel should issue from the main spray hole with the engine turning over at starter speed but a fine spray comparable to that illustrated in section 'A' should be ejected from the auxiliary spray hole. If the ejected fuel is more in the form of a liquid jet or issues from the main pintle hole, then the nozzle and holder assembly should be removed for overhaul and a replacement unit fitted.

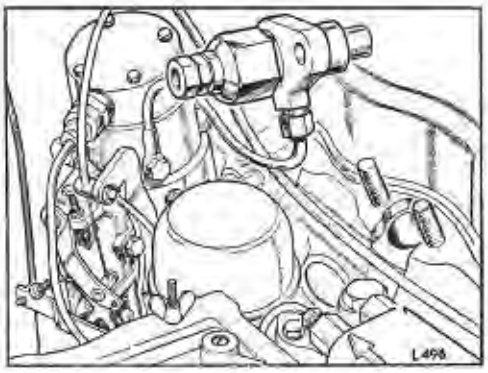


**Fig. L1-78. Testing nozzle assemblies on vehicle**

### Bench testing of injection nozzle and holder assembly

To check a nozzle assembly and ensure that it is functioning correctly, a setting outfit as illustrated is essential. A bench covered with linoleum or non-ferrous sheet metal is most suitable for mounting the outfit; such a surface facilitates the cleanliness essential when checking nozzle parts. Between the bench and setting outfit, a tray, also of non-ferrous metal, should be positioned to prevent spilt fuel spreading. Small containers may be attached to the bench to isolate the component parts of each assembly; these parts are carefully mated by the manufacturers and must **not** be interchanged. Lastly, a small bath with cover, containing Shell callibration fluid for washing components, should be kept conveniently near.

## Operation L1-16—*continued*

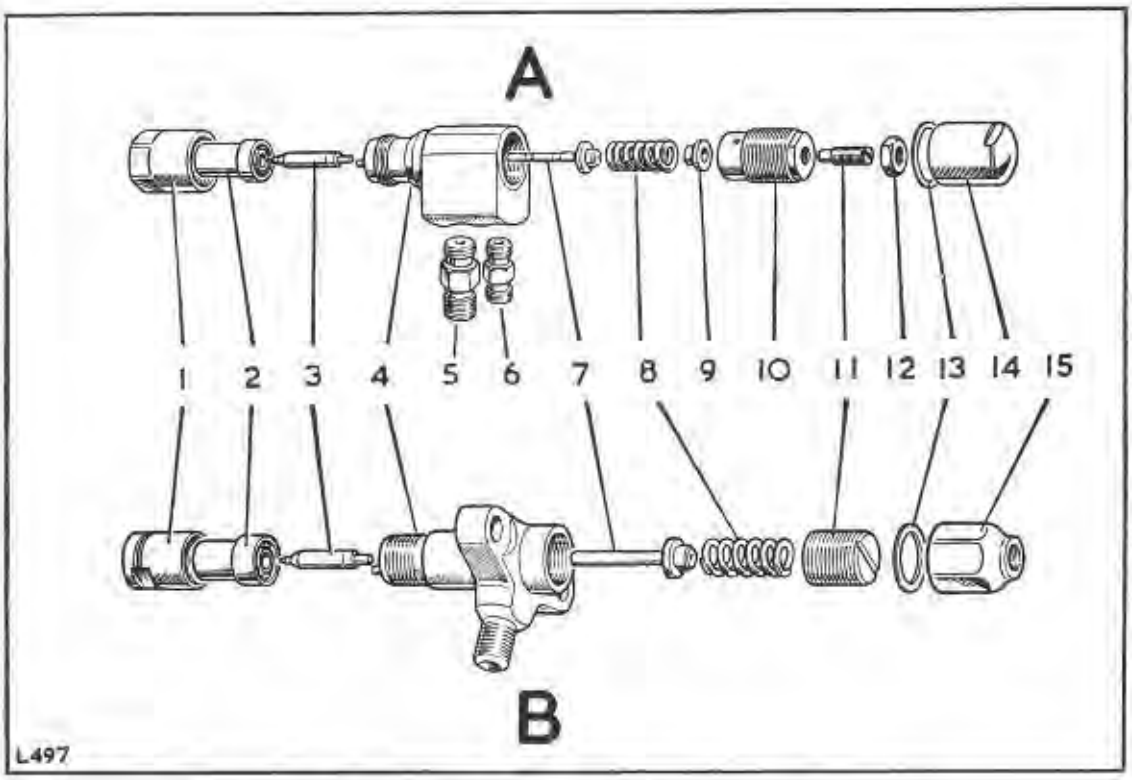


**Fig. L1-79. Exploded view of injector nozzle and holder assembly**

A—Early type B—Latest type

1 Cap nut
2 Nozzle valve body
3 Nozzle valve
4 Nozzle holder body
5 Feed pipe union
6 Spill back pipe union
7 Valve spindle and cap
8 Pressure spring
9 Spring cap
10 Pressure sleeve
11 Pressure adjusting screw
12 Locknut—adjusting screw
13 Copper washer
14 Protection cap
15 Combined locknut and end cap

The efficient operation of the injection nozzle assembly is dependent on four main conditions, as follows:

(a) The nozzle valve must open at 135 Ats.

(b) The rate of back leakage must be within 150 to 100 Ats.

(c) Seat tightness must be sufficient to prevent leakage.

(d) Spray form must compare favourably with the illustrations, Fig. L1-87.

Pressure setting, back leakage and seat tightness tests may be made by coupling the injection nozzle and holder assembly direct to the pressure feed pipe on setting outfit, but an adaptor must be fitted between the pipe and injection nozzle and holder assembly when testing spray form. This adaptor, see Fig. L1-86, increases the pressure of fuel to the injection nozzle and holder assembly sufficiently for the main and auxiliary spray form to be determined.

## Operation L1-16—*continued*

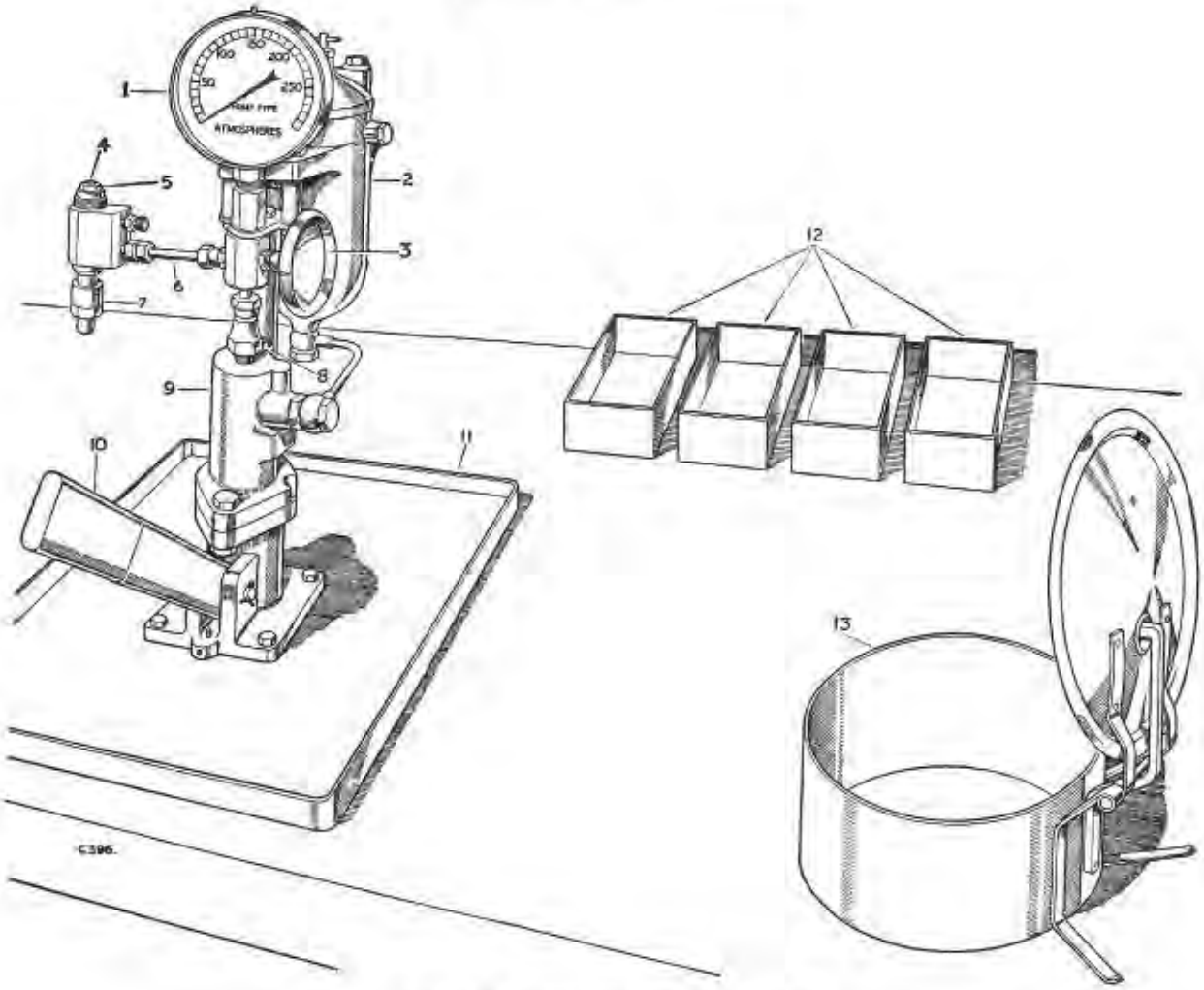


**Fig. L1-80. Injection nozzle setting outfit**
(early type nozzle illustrated)

1 Pressure gauge
2 Fuel container and filtering unit
3 Check valve
4 Nozzle holder injection pressure adjusting screw
5 Locknut for adjusting screw
6 Pressure feed pipe
7 Nozzle cap nut
8 Air vent screw
9 Pump body
10 Operating handle
11 Spill tray
12 Containers for injection nozzle components
13 Cleaning bath

### Dismantling and cleaning

A cleaning kit (Part No. 271484) is essential for removing carbon from the component parts of the injection nozzle and holder assembly. The use of special spanners (set Part No. 271482) is recommended.

1. Remove the nozzle holder protection cap and copper washer, unscrew the locknut, pressure adjusting screw and pressure sleeve, then withdraw the spring cap, spring and valve spindle. Unscrew the pipe unions and remove the copper washers. See Fig. L1-79 for variations between early and latest type nozzles.
2. Unscrew the cap nut, then remove the nozzle valve and body.
3. Soak the component parts of the assembly in Shell callibration fluid to loosen carbon deposits, but do **not** allow parts of any one assembly to be interchanged with those of another.

## Operation L1-16—*continued*

4. Brush away all external carbon deposits from component parts with a brass wire brush (Part No. ET068) and replace them in the oil bath.

   Particular care must be exercised when cleaning the pintle and seat of nozzle valve to avoid scratching or scoring, which may result in spray distortion.

5. Clean the three oil feed passages in the nozzle body with a wire or drill of $\frac{1}{16}$ in. (1,5 mm) diameter. Remove the carbon from the annular recess with tool Part No. ET071 and from the valve seat, using tool Part No. ET070, with a rotary motion.

6. Select the appropriate size probe from the pocket of cleaning kit and secure it in the pintle hole cleaner (Part No. ET069). Insert the probe into the bore of nozzle valve body and allow the end to extend through the main fuel outlet, then turn in a rotary manner to remove carbon.

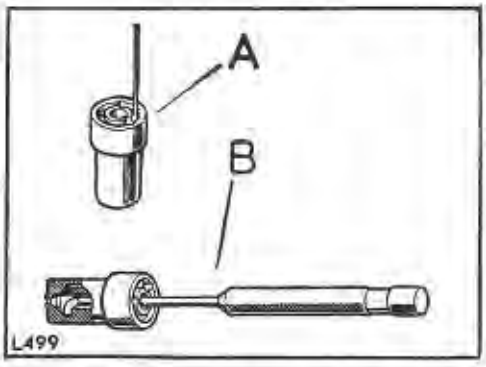


**Fig. L1-81. Cleaning nozzle, first stage**

A—Cleaning nozzle body oil feed passages
B—Scraping nozzle body annular recess

7. Carbon may be removed from the nozzle valve cone by inserting the valve into tool Part No. ET072 and then rotating it alternatively in a clockwise then anti-clockwise manner whilst pressing the valve inward.

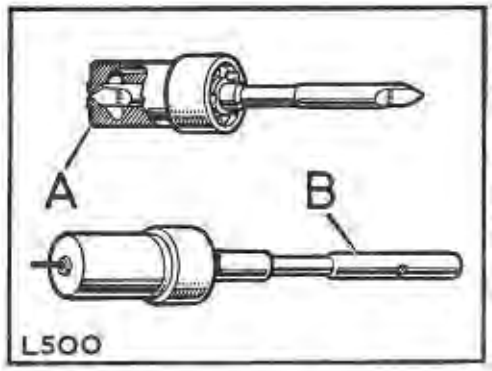


**Fig. L1-82. Cleaning nozzle, second stage**

A—Removing carbon from valve seat
B—Cleaning Pintaux nozzle hole

If the nozzle is blued or the seating has a dull circumferential ring indicating pitting or wear, the nozzle body and valve should be returned to a CAV Service Agent and replacement parts fitted. See 'Defect Location'.

Do **not** attempt to lap the nozzle valve to body. This process requires special equipment and training.

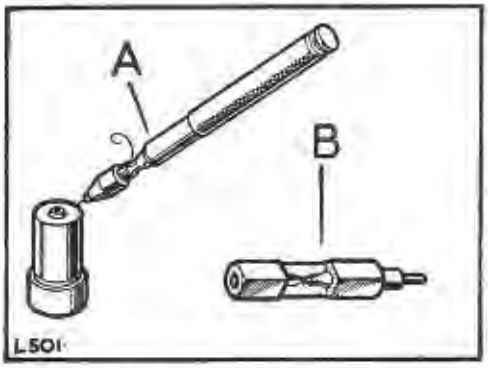


**Fig. L1-83. Cleaning the nozzle, third stage**

A—Cleaning auxiliary spray hole
B—Removing carbon from nozzle valve cone

## Operation L1-16—*continued*

8. Clean the auxiliary spray hole using Part No. ET120 fitted with probing wire .008 in. (0,20 mm) diameter. Allow $\frac{1}{16}$ in. (2,0 mm) only to extend from the chuck and thus minimise the possibility of the wire bending or breaking while probing. Great care must be taken to prevent breakage of the wire in the hole.
9. With flushing tool ET427 secured to the nozzle testing outfit, fit the nozzle body (spray holes uppermost) to the flushing tool and pump test oil through vigorously. This flushing process is necessary for the removal of any tiny carbon particles which may have become lodged in the body after scraping and probing.
10. Examine the pressure faces of nozzle body and nozzle holder to ascertain their freedom from scoring and scratches. These surfaces must be perfectly smooth. Fit the nozzle to nozzle body and check for freedom of movement.

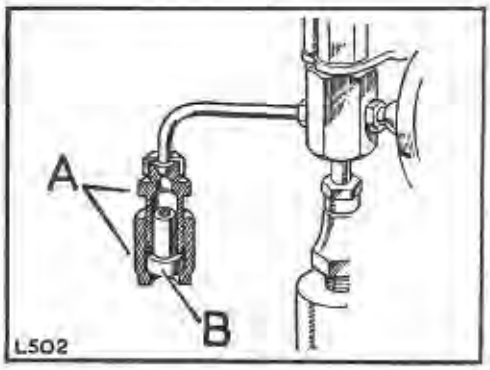


**Fig. L1-84. Flushing nozzle body**

A—Flushing tool
B—Nozzle body

11. Immerse the nozzle body and valve in the fluid bath and assemble whilst submerged. Wash the remaining components thoroughly and reverse dismantling procedure.

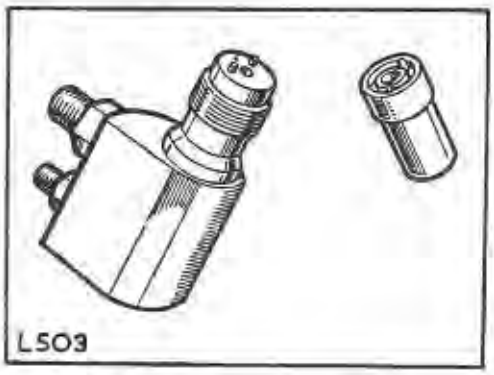


**Fig. L1-85. Injector nozzle assembly lapped pressure faces**

12. Seat injection nozzle assembly in accordance with the following test procedure.

**To test** (Fig. L1-80)

**Warning:** The injection nozzle must **not** be allowed to point towards the operator when spraying and the hands must **never** be allowed to contact the spray, which has great penetrating force.

1. Remove the cap from oil container (2) and fill with 1½ pints (0,8 litre) of Shell calibration fluid.
2. Air vent the system by removing the vent screw (8), allow oil to flow freely for a few seconds and replace the screw whilst the flow continues. Operate the pump handle until oil flows from pipe (6).
3. Connect the injector and holder assembly to the pressure feed pipe with the nozzle pointing downwards. The length and bore of this pipe is important and replacement pipes must be approximately 75 mm (2.8 in.) between the union nuts and of 3 mm (.118 in.) bore.
4. Close the check valve (3) to keep the pressure gauge out of circuit and smartly operate the hand lever (10) several times to expel all air from the system.

## Operation L1-16—*continued*

**Back leakage test**

5. Adjustment is made by removing the cap nut from the nozzle holder, loosening locknut (5) and turning the adjusting screw (4) clockwise to increase and anti-clockwise to decrease the opening pressure.

6. Fit assembled injector to nozzle setting outfit and adjust to open at 160 to 170 atmospheres then pump up to just below this figure, release handle to allow the needle of gauge to fall naturally. Time the pressure drop from 150 atmospheres down to 100 atmospheres.

7. This should be not less than 5 seconds for the original nozzle and not less than 7 seconds if a new one is to be fitted, and not more than 36 seconds for either.

8. Check externally the top and bottom of nozzle cap nut (7) and pressure pipe union nuts for signs of oil leakage. If leakage occurs at the nozzle cap nut, remove the nut and examine the pressure faces of nozzle holders and nozzle body for presence of foreign matter or surface scoring, before tightening further.

   A leakproof nozzle assembly with an excessive rate of pressure drop indicates a worn nozzle valve; the nozzle valve and nozzle body should be renewed.

**Pressure setting**

9. The selected **operational** opening pressure of the nozzle valve is 135 atmospheres. Readjust to this setting in the manner described in item 5.

**Seat tightness**

10. Wipe the bottom face of the injection nozzle dry and raise the pressure in the system to 125 atmospheres. A slight dampness on the bottom face is permissible, but blob formation or dripping indicates a badly seating valve in which case the assembly should be dismantled for further examination.

**Spray form**

11. Fuel delivery to the injection nozzle assembly when testing **spray form** must be characteristically similar to fuel delivery under normal operating conditions and to effect these conditions an adaptor (CAV Y7044872) must be fitted between the injection nozzle assembly and the pressure pipe.

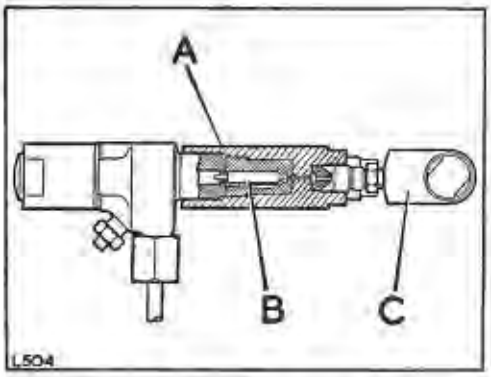


**Fig. L1-86. Sectioned view of adaptor (CAV-ET 872)**

A—Modified cap nut
B—Nozzle valve (less pintle)
C—Nozzle under test

The adaptor differs mainly in the cap nut and nozzle valve from the ordinary type of injection nozzle and holder assembly as fitted to the engine; the nozzle valve has no pintle and the cap nut is extended, bored and threaded to receive nozzles for testing.

12. Connect the adaptor assembly to the pressure pipe and adjust the opening pressure of the nozzle valve to 220 atmospheres. (See items 4 and 5). Screw the injection nozzle and holder assembly to be tested, into the adaptor and with the check valve closed, operate the handle smartly to expel air from the system.

    The auxiliary spray form may be tested at 60 strokes per minute and the main spray at 140. Spray development from starting to running speeds is illustrated, this illustration should be referred to and compared with the spray form of nozzles under test.

    Spray formation should be well formed and free from splits or distortion. A slight centre 'core' can be disregarded.

**Operation L1-16**—*continued*

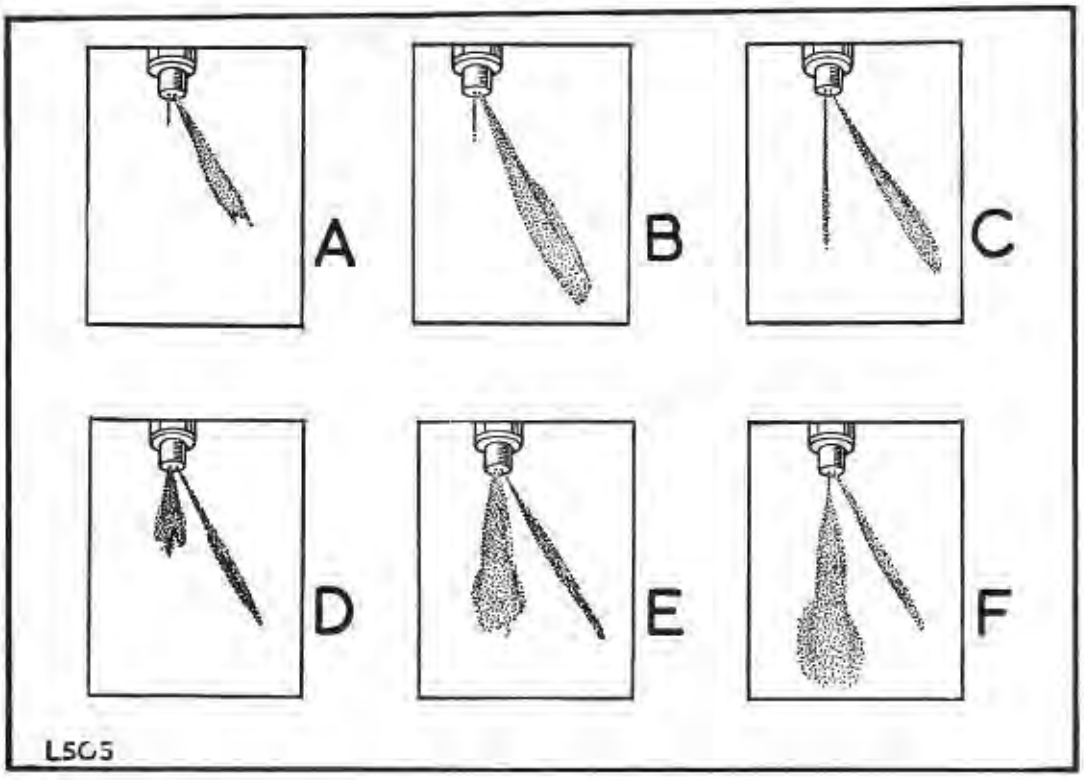


**Fig. L1-87. Injection nozzle spray form development, starting to running conditions**

## Fault diagnosis—Fuel system

The fuel system fault diagnosis is divided into two parts. Part one refers to carburation only and covers all four carburetters used on Land-Rovers. Part two covers general fuel system faults and is applicable to all models.

## Part one—carburetter fault diagnosis

| Symptom | Possible cause | | | Check and remedy |
|---|---|---|---|---|
| | Solex | Zenith | SU and Stromberg | |
| **Difficult starting when cold** | Insufficient choke action | Insufficient choke action | Insufficient choke action | Check action of choke unit to ensure that the choke is being applied fully—adjust choke cable |
| | Fast idle adjustment incorrect | Fast idle adjustment incorrect | Fast idle adjustment incorrect | Check and adjust fast idle setting. Check linkage between choke and throttle for distortion |
| | Float chamber level too low | Float chamber level too low | Float chamber level too low | Check needle valve for sticking—(closed). Check float level setting. Check inlet connection filter for blockage. Check external fuel system in accordance with fuel system fault diagnosis |
| | Carburetter flooding | Carburetter flooding | Carburetter flooding | Check needle valve for sticking—(open)<br>Float punctured<br>Fuel pump pressure too high<br>Float level too high |
| **Difficult starting when hot** | Choke sticking 'on' | Choke sticking 'on' | Choke sticking 'on' | Check to ensure choke is returning to fully 'off' position, reset as necessary |
| | Blocked air filter | Blocked air filter | Blocked air filter | Check oil level in air cleaner. Wash out filter gauze in clean petrol and blow with compressed air |
| | Float chamber level too high | Float chamber level too high | Float chamber level too high | Check float level setting. Check float arms for distortion. Check needle valve for sticking. Punctured float, fuel pump pressure too high |
| | — | Internal leakage | — | Check 'O' ring around venturi spigot is in good condition |
| | — | — | Jet tube sticking down (SU) | Check for distortion of jet tube |

## Fault diagnosis—*continued*

| Symptom | Possible cause | | | Check and remedy |
|---|---|---|---|---|
| | **Solex** | **Zenith** | **SU and Stromberg** | |
| **Erratic slow-running or stalling on deceleration** | Float level too low | Float level too low | Float level too low | Check float chamber level. Check for needle valve sticking |
| | — | — | Piston sticking (SU) | Clean piston and suction chamber in clean fuel |
| | Incorrect slow running setting | Incorrect slow running setting | — | Check slow running jet for blockage. Check and reset slow running in accordance with Operation L1-1 or L1-2. Check that the volume control screw conical end is not distorted |
| | — | — | Incorrect jet setting | Check and reset jet settings in accordance with carburetter overhaul instructions |
| | Carburetter air leaks | Carburetter air leaks | Carburetter air leaks | Check throttle spindle and bearings for wear |
| | Manifold air leaks | Manifold air leaks | Manifold air leaks | Check inlet manifold gasket for leakage. Check inlet manifold for cracks and distortion of mating faces. Check gasket between carburetter and manifold. Check condition of vacuum advance pipe and connections. Check vacuum servo pipes and connections |
| | — | — | **Damper** oil too thick. No oil in damper | Check and refill to correct level with oil specified |
| **Poor acceleration** | — | Acceleration pump sticking | — | Check piston assembly moves freely in its housing and returns under the spring loading |
| | | Ball valve sticking | | |
| | | Non-return valve sticking | | |
| | Pump diaphragm leaking | — | — | Check accelerator pump cover for signs of fuel leakage indicating a leaking diaphragm |
| | Pump operating linkage incorrectly adjusted | — | — | Check adjustment of accelerator linkage |
| | Blocked non-return valve | — | — | Remove jets and discharge tube, wash in clean petrol and clean with compressed air |
| | Blocked accelerator jet | | | |
| | Discharge tube ball valve seized | | | |
| | — | — | No oil in damper or oil too thin | Check level of oil in damper, and fill to correct level with oil of a viscosity of SAE 20 |
| | | | Piston sticking | (SU) Check piston is free, clean chamber and piston assembly with clean petrol (Stromberg) Check diaphragm for signs of cracking or porosity |

## Fault diagnosis—*continued*

| Symptom | Possible cause | | | Check and remedy |
|---|---|---|---|---|
| | Solex | Zenith | SU and Stromberg | |
| **Loss of power** | Blocked fuel jets and carburetter drillings | Blocked fuel jets and carburetter drillings | — | Remove and clean all jets using clean petrol and compressed air. Wash carburetter body in clean fuel and clear all drillings with compressed air jet |
| | See 'Poor acceleration'. Accelerator pumps and linkage | | | |
| | Water in fuel | Water in fuel | Water in fuel | If water is present in float chamber, the complete fuel system should be drained, fuel components should be dismantled, inspected for contamination, paying particular attention to sediment bowl and gauze filters |
| **Excessive fuel consumption** | Blocked air cleaner | Blocked air cleaner | Blocked air cleaner | Check oil level. Wash out filter gauze in clean petrol |
| | Incorrectly adjusted carburetter | Incorrectly adjusted carburetter | Incorrectly adjusted carburetter | Check and reset slow running in accordance with carburetter overhaul instructions |
| | Accelerator linkage incorrectly adjusted | Accelerator linkage incorrectly adjusted | — | Check and reset accelerator linkage |
| | Float level too high | Float level too high | Float level too high | Check and reset float level |
| | Worn jets | Worn jets | Worn jets and needle | Check and replace as necessary |
| | — | — | Incorrect needle | Check needle type |
| | Choke sticking 'on' | Choke sticking 'on' | Choke sticking 'on' | Check to ensure choke is returning to fully 'off' position, reset as necessary |

## Part two—general fuel system fault diagnosis

**If engine will not start**

Check for fuel starvation as follows:

1. With engine cold, remove inlet pipe at carburetter and operate fuel pump priming lever (vehicles with electric fuel pump, switch on ignition), fuel should issue from the pipe in a steady flow.

If fuel **is** present, check following items:

2. Solex carburetter—check gauze filter for blockage. If necessary, wash in clean fuel.
3. Remove float chamber top cover and test needle valve for sticking closed. Replace as necessary.
4. Solex and Zenith—remove main jet assembly and check for signs of blockage. Clean, using a high pressure air line.
5. SU carburetter—check drilling between float chamber and jet assembly for blockage. Clean, using a high pressure air line.

If fuel is **not** present, check following items:

6. Check fuel tank contents, do not assume gauge reading to be correct. Replenish tank as necessary.
7. Mechanical type fuel pump—remove inlet pipe at fuel pump, place finger over inlet aperture and operate priming lever. A distinct suction should be felt.

   If suction is felt, the fault will be either:

   (a) Blockage between fuel tank and fuel pump—Check all filters and sediment bowl for blockage. Remove fuel pipes and clear with a high pressure air line.

   (b) Air leak in pipes between fuel tank and fuel pump—Check all filters and sediment bowl seals for serviceability and tightness. Check all pipes and connections for damage and security.

   (c) Fuel tank air vent blocked—Check air vent pipe is clear.

   If no suction is felt—Check sealing washer between sediment bowl and pump. Check filter for blockage. Remove and strip pump, paying particular attention to diaphragm and valve condition, fit new parts as necessary.

8. Electric type fuel pump—disconnect fuel pipe at carburetter and submerge pipe into a suitable container, switch on ignition.

   If pump operates normally, then quantity of fuel pumped diminishes, check fuel tank vent for blockage.

   If pump output is low accompanied by slow pump action, check suction pipe between tank and pump, also fuel filter and sediment bowl for restrictions. Check fuel pump inlet filter.

9. Electric type fuel pump—if pump does not operate, carry out the following checks:

   (a) Disconnect electrical lead from pump and test for supply.

   (b) Remove end cover from pump and check that contact breaker points are closed. Test points by placing a piece of wire across points, if the pump begins to operate, the fault is due to dirt corrosion or maladjustment of points.

   (c) Remove the inlet pipe connection, if the pump then begins to operate the fault lies in the pipe line between tank and pump.

   (d) Check for seized diaphragm and armature assembly. Dismantle pump, check throw-over mechanism. Check armature for seizure.

10. Electric type fuel pump—if pump operation is noisy, submerge pump outlet pipe in a quantity of fuel and switch on ignition. Fuel should be free of air bubbles. If bubbles are present, carry out the following checks:

    (a) Check all connections between tank and pump for security.

    (b) Check screws securing magnet house to pump body for tightness.

11. Electric type fuel pump—if pump operates with no fuel delivery, carry out the following checks:

    (a) Serious air leak on the suction side, check all pipes and connections.

    (b) Foreign matter lodged under the fuel pump inlet or outlet valve.

## DATA

### Air cleaner

| | |
|---|---|
| Type | AC centrifugal |
| Capacity: | |
| 4-cylinder | 1½ Imperial pints; 1.8 US pints; 0,85 litre |
| 6-cylinder | 1 Imperial pint; 1.2 US pints; 0,5 litre |

### Carburetter:

Four carburetters are in use, Solex and Zenith types are used on 2¼ litre models, Zenith/Stromberg and SU types are used on 2.6 litre models. The following are the standard settings, but may vary according to operating conditions.

| | |
|---|---|
| **Make** | **Solex** |
| Type | PA10-5 and PA10-6 |
| Details | 2¼ litre Petrol |
| Choke size | 28 |
| Main jet | 125 |
| Correction jet | 185 |
| Pilot jet | 50 |
| Pump jet | 65 |
| Economy jet | Blank |
| Air bleed jet | 1.5 |
| Starter air jet | — |
| Starter petrol jet | 145 |
| Economy system Petrol jet | 100 |
| Petrol level | $\frac{5}{8}$ in. $\pm\frac{1}{8}$ in. (16 mm $\pm$3 mm) below float chamber joint face |

Carburetter settings which may be advantageous for high altitudes, 2¼ litre Petrol only (Solex carburetter):

| | |
|---|---|
| Main jet (120) | 5,000 ft. to 7,000 ft (1.524 m to 2.134 m) |
| Main jet (117.5) | 7,000 ft. to 9,000 ft. (2.134 m to 2.740 m) |
| Main jet (115) Pilot jet (45) | 9,000 ft to 12,000 ft (2.740 m to 3.655 m) |
| Main jet (112.5) Pilot jet (45) | 12,000 ft to 14,000 ft (3.655 m to 4.268 m) |

| | |
|---|---|
| **Make** | **Zenith** |
| Type | 36 IV |
| Choke size | 27 mm |
| Main jet | 125 |
| Enrichment jet | 150 |
| Slow running jet (ball type) | 60 |
| Pump jet (short stroke outer hole) | 65 |
| Part throttle air bleed | 3.0 |
| Full throttle air bleed | 1.5 drilled |
| Slow running air bleed | 1.4 |
| Spring loaded ball valve in pump circuit | 105 |
| Fast idle | 1.20 |
| Needle valve | 1.75 |
| Needle valve washer | 2.00 |
| Fuel level | 31–32 mm |

| | |
|---|---|
| **Make** | **Zenith/Stromberg** |
| Type | 175 CD 2S |
| Metering needle | B18362.Z/41 |
| Air valve return spring | B18277.Z |
| Needle valve | B18353 1,75 mm with 2,0 mm washer 015667 |
| Fast Idle<br>Inter connection setting | 1.1 mm or No. 57 drill. At edge of throttle |
| Float height | 16 mm to 17 mm |
| **Make** | **SU** |
| Type | HD 6 |
| Needle | SS |
| Jet | .100 |
| Float needle valve TI<br>Float needle seating | AUD 9096 assembly |
| Piston spring | Yellow (8 oz) |
| Economiser | .116 |
| Fast idling cam | AUC 1298 |

**Fuel filters**

| | |
|---|---|
| Petrol models | Sediment bowl, full flow |
| Diesel models | Sedimenter, full flow and CAV replaceable element, full flow |

**Fuel pump**

| | |
|---|---|
| 2¼ litre Petrol, Diesel | AC mechanical (not interchangeable) |
| 2.6 litre Petrol | SU electric |

**Fuel tank**

| | |
|---|---|
| 4-cylinder models | 10 Imperial gallons; 12 US gallons; 45 litres |
| 6-cylinder models, except Station Wagon | 11 Imperial gallons; 13 US gallons; 50 litres |
| 6-cylinder, Station Wagon models | 16 Imperial gallons; 19 US gallons; 73 litres |

**Injection pump, Diesel models**

| | |
|---|---|
| Type | CAV mechanically-governed distributor |

| | |
|---|---|
| **Injection nozzle assemblies** | CAV Pintaux |
| Nozzle size | BDNO/SP6209 |
| Opening pressure of nozzle valve | 135 Ats |
| Back leakage rate, 150 to 100 Ats: | |
| New nozzle | 7 seconds |
| Original nozzle | 5 seconds |

# SECTION M—EXHAUST SYSTEM

# INDEX—EXHAUST SYSTEM

**Note:** A comprehensive, detailed index is included at the rear of this manual


| Description | Operation Number |
|---|---|
| Exploded views and description | At front of Section |
| Exhaust manifold | — |
| **FRONT EXHAUST PIPE** | |
| 4 cylinder models | 1 |
| 6 cylinder models | 2 |
| **INTERMEDIATE PIPE** | |
| 4 cylinder models | 1 |
| 6 cylinder models | 2 |
| **SILENCER AND TAIL PIPE** | |
| 4 cylinder models | 1 |
| 6 cylinder models | 2 |

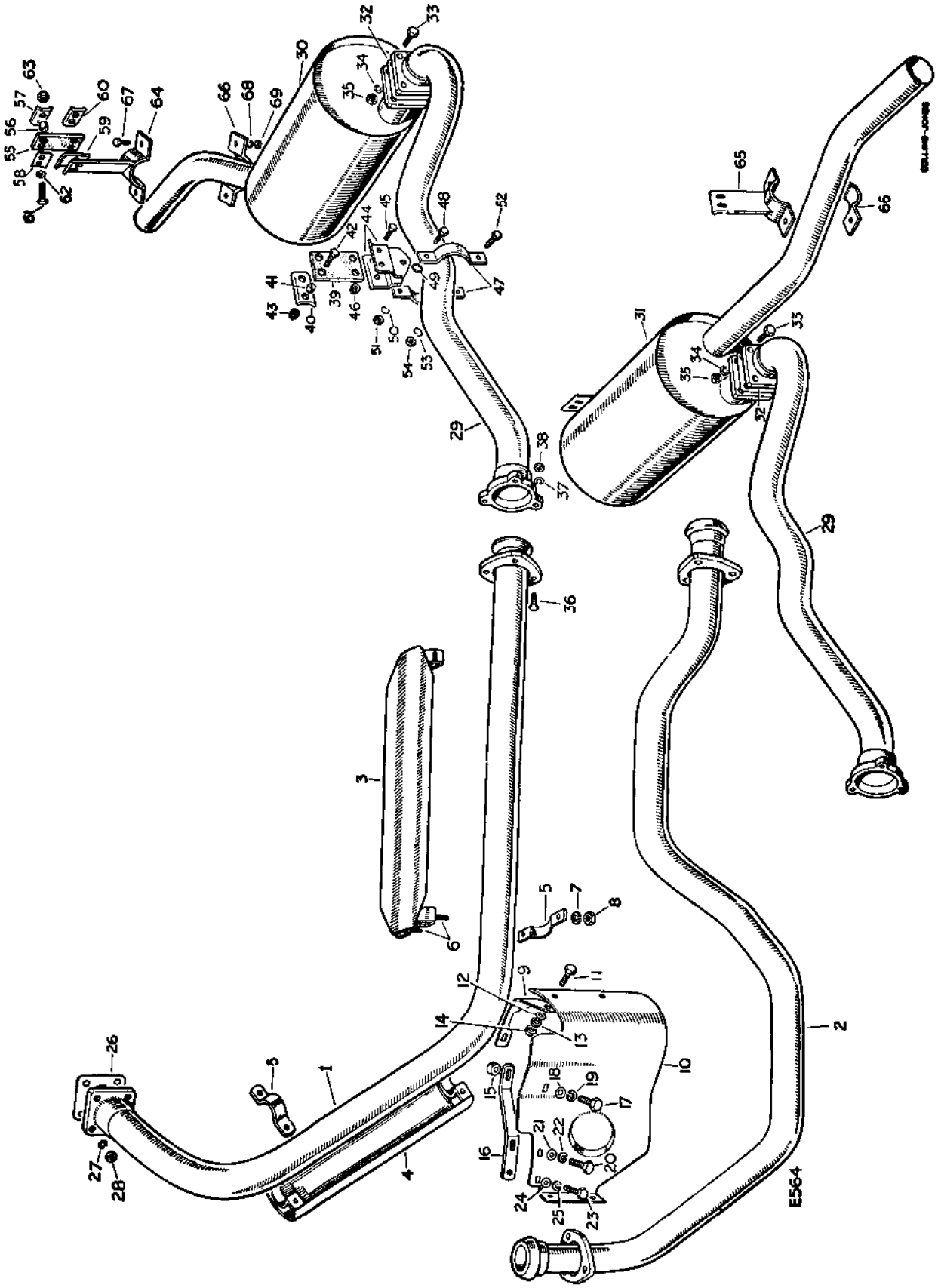


Fig. M1-1. Exhaust system, 4 cylinder models

**Key to illustration of exhaust system for 4 cylinder models**

1 Front exhaust pipe complete. 2 litre Petrol and Diesel
2 Front exhaust pipe complete. 88 2¼ litre Petrol 1961 onwards
3 Exhaust pipe heat shield, long — 1958–60 Petrol models Diesel models up to vehicle suffix 'C' inclusive
4 Exhaust pipe heat shield, short — 1958–60 Petrol models Diesel models up to vehicle suffix 'C' inclusive
5 Pipe clamp — Fixing heat shield to front exhaust pipe — 1958–60 Petrol models Diesel models up to vehicle suffix 'C' inclusive
6 Bolt (¼ in. UNF x ⅞ in. long) — Fixing heat shield to front exhaust pipe — 1958–60 Petrol models Diesel models up to vehicle suffix 'C' inclusive
7 Spring washer — Fixing heat shield to front exhaust pipe — 1958–60 Petrol models Diesel models up to vehicle suffix 'C' inclusive
8 Nut (¼ in. UNF) — Fixing heat shield to front exhaust pipe — 1958–60 Petrol models Diesel models up to vehicle suffix 'C' inclusive
9 Bracket, exhaust manifold to heat shield. Up to engine suffix 'H' inclusive
10 Shield, exhaust manifold. Up to engine suffix 'H' inclusive
11 Bolt (5/16 in. UNF x ¾ in. long) — Fixing bracket to heat shield
12 Plain washer — Fixing bracket to heat shield
13 Spring washer — Fixing bracket to heat shield
14 Nut (5/16 in. UNF) — Fixing bracket to heat shield
15 Distance washer for heat shield — Up to engine suffix 'H' inclusive
16 Steady strip for heat shield — Up to engine suffix 'H' inclusive
17 Bolt (5/16 in. UNC x 1⅛ in. long) — Fixing steady strip, heat shield and distance washer to manifold — Up to engine suffix 'H' inclusive
18 Plain washer — Fixing steady strip, heat shield and distance washer to manifold — Up to engine suffix 'H' inclusive
19 Spring washer — Fixing steady strip, heat shield and distance washer to manifold — Up to engine suffix 'H' inclusive
20 Bolt (5/16 in. UNC x ⅞ in. long) — Fixing heatshield and steady strip to manifold — Up to engine suffix 'H' inclusive
21 Plain washer — Fixing heatshield and steady strip to manifold — Up to engine suffix 'H' inclusive
22 Spring washer — Fixing heatshield and steady strip to manifold — Up to engine suffix 'H' inclusive
23 Bolt (¼ in. UNF x 7/16 in. long) — Fixing heat shield to steady strip — Up to engine suffix 'H' inclusive
24 Plain washer — Fixing heat shield to steady strip — Up to engine suffix 'H' inclusive
25 Spring washer — Fixing heat shield to steady strip — Up to engine suffix 'H' inclusive
26 Joint washer for exhaust pipe. Diesel and 2 litre Petrol models
27 Spring washer — Fixing exhaust pipe to manifold — 2 litre Petrol models
28 Nut (5/16 in. BSF) — Fixing exhaust pipe to manifold — 2 litre Petrol models
29 Intermediate exhaust pipe. 88 Petrol models 1958–60. Diesel models
30 Silencer complete, RHStg
31 Silencer complete, LHStg
32 Joint washer — Fixing silencer to intermediate pipe
33 Bolt (5/16 in. UNF x 1 in. long) — Fixing silencer to intermediate pipe
34 Spring washer — Fixing silencer to intermediate pipe
35 Nut (5/16 in. UNF) — Fixing silencer to intermediate pipe
36 Bolt (5/16 in. UNF x 1½ in. long) — Fixing intermediate pipe to front exhaust pipe
37 Spring washer — Fixing intermediate pipe to front exhaust pipe
38 Nut (5/16 in. UNF) — Fixing intermediate pipe to front exhaust pipe
39 Flexible mounting, intermediate exhaust pipe — 88
40 Clamp plate — Fixing flexible mounting to chassis — 88
41 Distance piece — Fixing flexible mounting to chassis — 88
42 Bolt (¼ in. UNF x 1 in. long) — Fixing flexible mounting to chassis — 88
43 Self-locking nut (¼ in. UNF) — Fixing flexible mounting to chassis — 88
44 Plate for flexible mounting — 88
45 Bolt (¼ in. UNF x 1 in. long) — Fixing plate to flexible mounting — 88
46 Self-locking nut (¼ in. UNF) — Fixing plate to flexible mounting — 88
47 Pipe clamp — 88
48 Bolt (5/16 in. UNF x 1 in. long) — Fixing pipe clamp to flexible mounting plate — 88
49 Shakeproof washer — Fixing pipe clamp to flexible mounting plate — 88
50 Spring washer — Fixing pipe clamp to flexible mounting plate — 88
51 Nut (5/16 in. UNF) — Fixing pipe clamp to flexible mounting plate — 88
52 Bolt (¼ in. UNF x 1 in. long) — Fixing pipe clamp to exhaust pipe — 88
53 Spring washer — Fixing pipe clamp to exhaust pipe — 88
54 Nut (¼ in. UNF) — Fixing pipe clamp to exhaust pipe — 88
55 Flexible mounting for tail pipe — 88
56 Distance piece — Fixing flexible mounting to chassis frame and clamp bracket — 88
57 Clamp plate, upper — Fixing flexible mounting to chassis frame and clamp bracket — 88
58 Packing plate, upper — Fixing flexible mounting to chassis frame and clamp bracket — 88
59 Packing plate, lower — Fixing flexible mounting to chassis frame and clamp bracket — 88
60 Clamp plate, lower — Fixing flexible mounting to chassis frame and clamp bracket — 88
61 Bolt (¼ in. UNF x 1⅛ in. long) — Fixing flexible mounting to chassis frame and clamp bracket — 88
62 Plain washer — 88
63 Self-locking nut (¼ in. UNF) — 88
64 Pipe clamp bracket, RHStg
65 Pipe clamp bracket, LHStg
66 Saddle for clamp bracket
67 Bolt (5/16 in. UNF x 1 in. long) — Fixing exhaust pipe to clamp bracket
68 Spring washer — Fixing exhaust pipe to clamp bracket
69 Nut (5/16 in. UNF) — Fixing exhaust pipe to clamp bracket

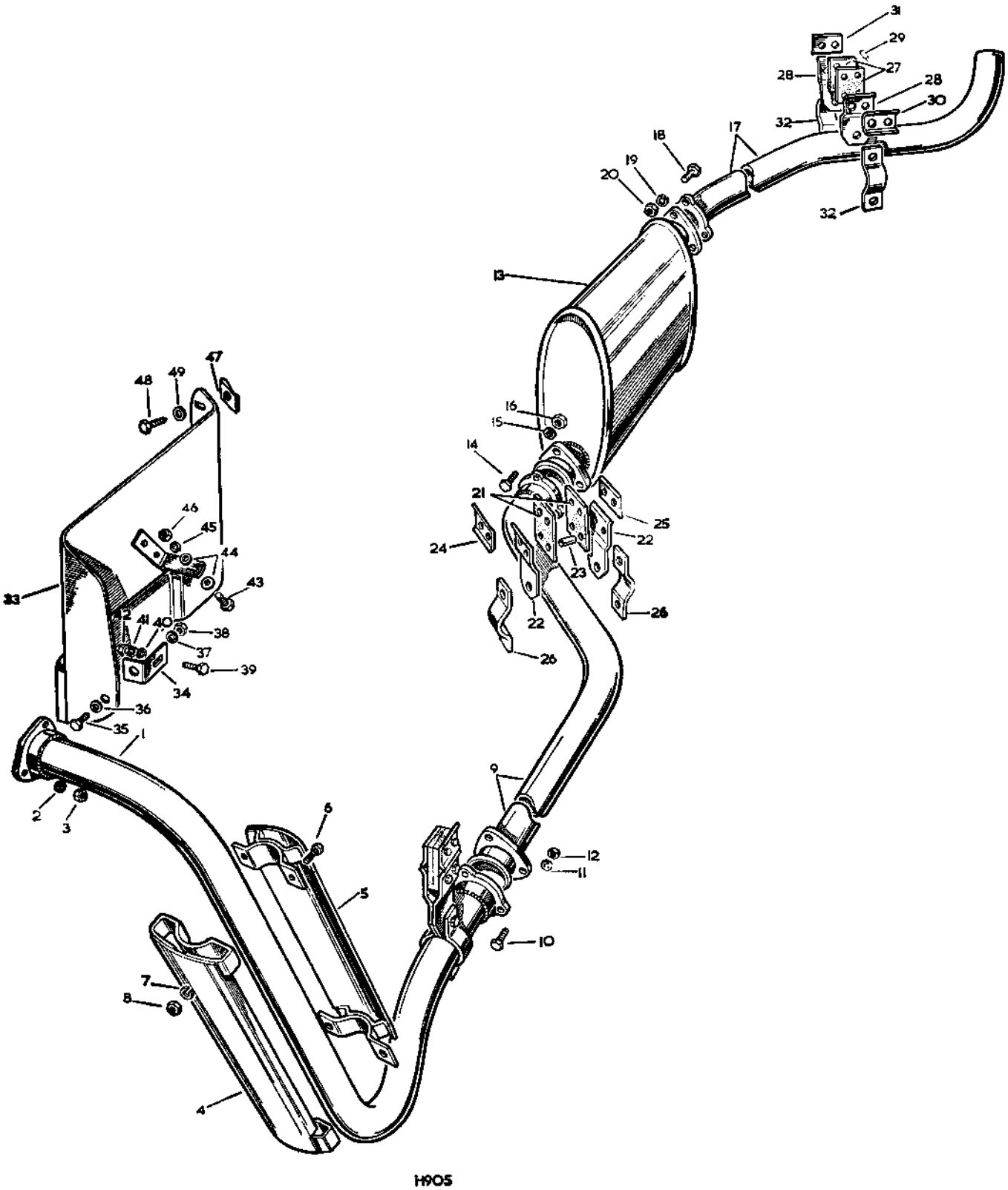


**Fig. M1-2. Exhaust system, 6 cylinder models**

**Key to illustration of exhaust system for 6 cylinder models**

1 Front exhaust pipe complete
2 Spring washer } Fixing front exhaust
3 Nut ($\frac{5}{16}$ in. UNF) } pipe to manifold
4 Heat shield } For front
5 Heat shield } exhaust pipe
6 Bolt ($\frac{1}{4}$ in. UNF x $\frac{7}{8}$ in. long) } Fixing heat shields
7 Spring washer } together on front
8 Nut ($\frac{1}{4}$ in. UNF) } exhaust pipe
9 Intermediate exhaust pipe complete
10 Bolt ($\frac{5}{16}$ in. UNF x $1\frac{1}{2}$ in. long) } Fixing front and
11 Spring washer } intermediate
12 Nut ($\frac{5}{16}$ in. UNF) } exhaust pipes together
13 Exhaust silencer
14 Bolt ($\frac{5}{16}$ in. UNF x $1\frac{1}{2}$ in. long) } Fixing inter-
15 Spring washer } mediate pipe
16 Nut ($\frac{5}{16}$ in. UNF) } to silencer
17 Tail pipe complete. 109 Station Wagon
18 Bolt ($\frac{5}{16}$ in. UNF x $1\frac{1}{2}$ in. long) } Fixing silencer
19 Spring washer } to tail
20 Nut ($\frac{5}{16}$ in. UNF) } pipe
21 Flexible mounting for front and intermediate pipes
22 Plate for flexible mounting
23 Distance piece } Fixing flexible mounting
24 Clamp plate } to mounting plate
25 Packing plate } and chassis frame
26 Pipe clamp, front and intermediate exhaust
27 Flexible mounting for tail pipe
28 Plate for flexible mounting
29 Distance piece } Fixing flexible mounting
30 Clamp plate } to mounting plate
31 Packing plate } and chassis frame
32 Clamp for tail pipe
33 Heat shield, exhaust manifold
34 Support bracket for heat shield
35 Bolt ($\frac{1}{4}$ in. UNF x $\frac{9}{16}$ in. long) } Fixing
36 Plain washer } support bracket
37 Spring washer } to heat
38 Nut ($\frac{1}{4}$ in. UNF) } shield
39 Bolt ($\frac{3}{8}$ in. UNF x $\frac{3}{4}$ in. long) }
40 Plain washer } Fixing bracket to
41 Spring washer } dash support
42 Nut ($\frac{3}{8}$ in. UNF) }
43 Bolt ($\frac{1}{4}$ in. UNF x 1 in. long) }
44 Plain washer }
45 Spring washer } Fixing
46 Nut ($\frac{1}{4}$ in. UNF) } heat shield
47 Spire nut } to toe box
48 Self-tapping screw }
49 Plain washer }

## Exhaust system, 4 cylinder models, to remove and refit—Operation M1-1

Workshop hand tools:
Spanner sizes: $\frac{5}{16}$ in. BSF, $\frac{7}{16}$ in. AF, $\frac{1}{2}$ in. AF open end

### Front exhaust pipe

**To remove**

1. Remove securing bolts at front exhaust pipe and intermediate pipe joint.
2. Remove nuts and spring washers securing pipe at exhaust manifold.
3. Withdraw the exhaust pipe and joint washer.

**To refit**

1. Reverse the removal procedure.

### Intermediate exhaust pipe

**To remove**

1. Remove securing bolts at front exhaust pipe and silencer.
2. Remove supporting clamp and withdraw intermediate exhaust pipe.

**To refit**

1. Reverse the removal procedure, leaving the supporting clamps loose until the pipe has been secured firmly to front exhaust pipe and silencer.

### Exhaust silencer (RHStg models only)

**To remove**

1. Remove the bolts securing intermediate pipe to silencer and release support saddle from silencer tail pipe, keeping silencer supported by hand.
2. Withdraw silencer assembly.

**To refit**

1. Reverse removal procedure, ensuring that the bolts securing intermediate pipe to silencer are fully tightened before finally clamping the tail pipe support.

### Exhaust silencer (LHStg models only)

**To remove**

1. Remove bolts securing intermediate pipe to silencer.
2. Keeping the silencer supported, release the supporting strap for silencer right-hand side and saddle clamp on tail pipe, then withdraw silencer assembly.

**To refit**

1. Fit the silencer in position and loosely support by means of supporting strap and saddle clamp.
2. Secure the intermediate pipe to silencer.
3. Finally tighten bolts securing support strap and saddle clamp.

## Exhaust system, 6 cylinder models, to remove and refit—Operation M1-2

Workshop hand tools:
Spanner sizes: $\frac{7}{16}$ in. AF, $\frac{1}{2}$ in. AF, $\frac{9}{16}$ in. AF open end

### Front exhaust pipe

**To remove**

1. Remove the securing bolts at the front exhaust pipe and intermediate pipe joint.
2. Remove the securing bolts fixing the front exhaust pipe to the flexible mounting.
3. Remove nuts and spring washers securing pipe at exhaust manifold.
4. Withdraw the exhaust pipe.
5. If required, remove the bolts securing the heat shield to the front exhaust pipe and withdraw the two halves of the shield.

**To refit**

1. Reverse the removal procedure, leaving the flexible mounting loose until the pipe has been firmly secured to the manifold and intermediate pipe.

### Intermediate exhaust pipe

**To remove**

1. Remove securing bolts at front exhaust pipe and silencer.
2. Remove the securing bolts fixing the intermediate pipe to the flexible mounting and withdraw the intermediate pipe.

**To refit**

1. Reverse the removal procedure, leaving the flexible mounting loose until the pipe has been firmly secured to front exhaust pipe and silencer.

### Exhaust silencer and tail pipe

**To remove**

1. Remove the bolts securing the intermediate pipe to the silencer and the bolts securing the tail pipe to the flexible mounting, keeping the silencer supported by hand.
2. Withdraw the silencer assembly.
3. If required, remove the bolts securing the tail pipe to the silencer and withdraw tail pipe.

**To refit**

1. Reverse the removal procedure, ensuring that the bolts securing intermediate pipe to silencer are fully tightened before finally clamping the tail pipe support.

# SECTION N—ELECTRICAL EQUIPMENT

# INDEX—ELECTRICAL EQUIPMENT

**Note:** A comprehensive, detailed index is included at the end of this manual


| Description | Operation Number |
|---|---|
| Circuit diagrams | At beginning of Section |
| Battery | 1 |
| Headlamps | 2 |
| Side lamps | 3 |
| Stop and tail lamps | 4 |
| Flasher lamp | 5 |
| Rear number plate illumination lamp | 6 |
| Stop lamp switch | 7 |
| Engine starter switches | 8 |
| Dip switch for head amps | 9 |
| Flasher switch | 10 |
| Flasher unit | 11 |
| Ignition coil—Petrol models | 12 |
| Distributor—Petrol models | 13 |
| Heater plugs—Diesel models | 14 |
| Fuse and junction boxes | 15 |
| Current voltage regulators | 16 |
| Horn push | 17 |
| Electric horn | 18 |
| Windscreen wiper | 19 |
| Starter motor—Petrol models | 20 |
| Starter motor—Diesel models | 21 |
| Dynamo | 22 |
| Alternator output control unit | 23 |
| Alternator field isolating relay | 24 |
| Alternator warning light control | 25 |
| Battery charging system with alternator | 26 |
| Alternator | 27 |
| Fault Diagnosis | At end of Section |
| Data | At end of Section |

## CIRCUIT DIAGRAMS

### IMPORTANT

Before commencing any work on the electrical equipment, check the polarity of the system to avoid the possibility of fitting unsuitable components or making wrong connections, resulting in damage.

All 2½ litre Petrol and Diesel models up to vehicle suffix 'C' inclusive incorporate a **POSITIVE EARTH** electrical system. 2¼ litre Petrol and Diesel models from vehicle suffix 'D' onwards, and all 2.6 litre Petrol models are equipped with a **NEGATIVE EARTH** electrical system.

**Caution:** When transistorised electrical equipment, such as radios, tachometers, etc., are fitted, it is most important to ensure correct polarity of the electrical connections, otherwise the equipment may be irreparably damaged.

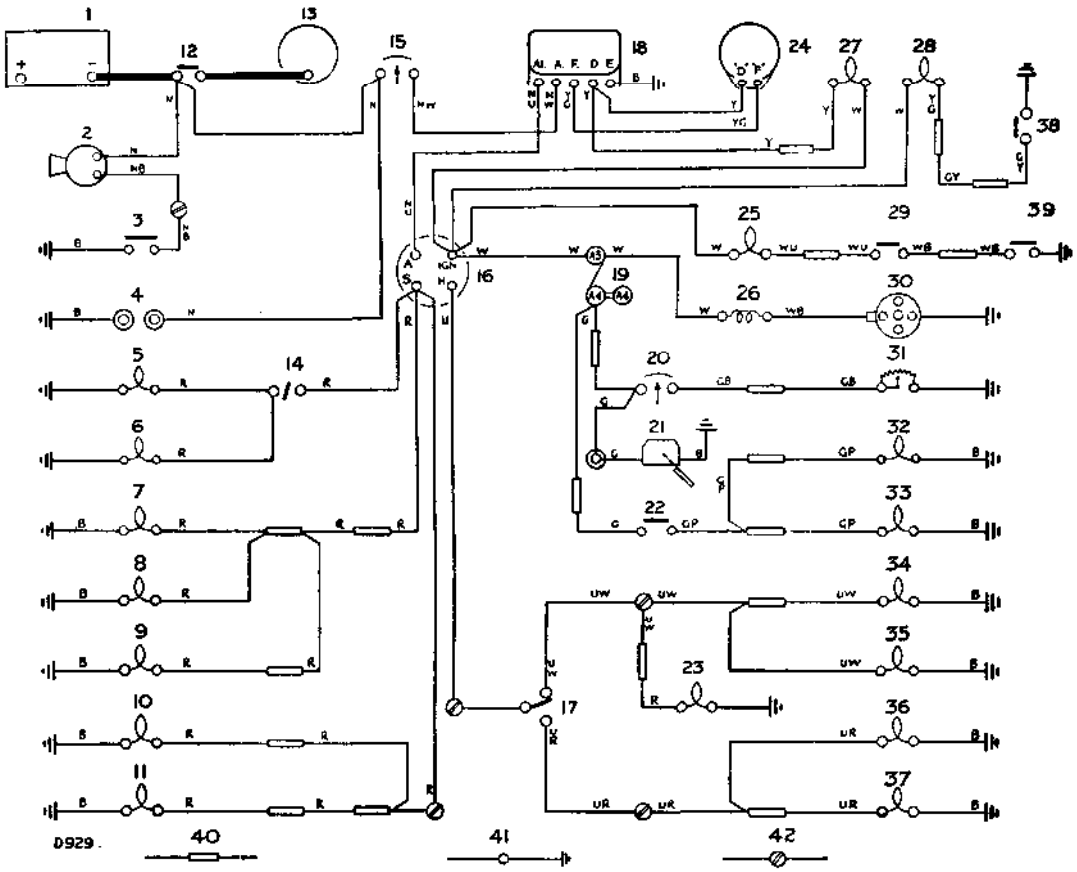


**Fig. N1-1. Circuit diagram, 2½ litre Petrol models, Series II, positive earth**

1 Battery, 12 volt
2 Horn
3 Horn push button
4 Inspection light sockets
5 Panel illumination
6 Panel illumination
7 Tail light
8 Number plate illumination
9 Tail light
10 Side light
11 Side light
12 Starter switch
13 Starter
14 Panel light switch
15 Ammeter
16 Ignition and lighting switch
17 Headlight dip switch
18 Voltage control box
19 Fuse box
20 Fuel gauge
21 Screen wiper, plug and socket
22 Stop light switch
23 Main beam warning light
24 Dynamo
25 Mixture warning light
26 Ignition coil
27 Charging warning light
28 Oil pressure warning light
29 Mixture switch
30 Distributor
31 Fuel gauge, petrol tank
32 Stop light
33 Stop light
34 Headlight, main
35 Headlight, main
36 Headlight, dip
37 Headlight, dip
38 Oil pressure switch
39 Thermostat
40 Snap connectors
41 Earth connections via terminals and fixing bolts
42 Junction box terminals

**Key to cable colours**

B—Black G—Green N—Brown P—Purple R—Red U—Blue W—White Y—Yellow RN—Red with Brown, and so on

When cables have two-colour code letters, the first denotes the main and the latter the tracer.
On vehicles to the North American specification, the connections at the lighting switch are such that the sidelamps are extinguished when the headlamps are in use

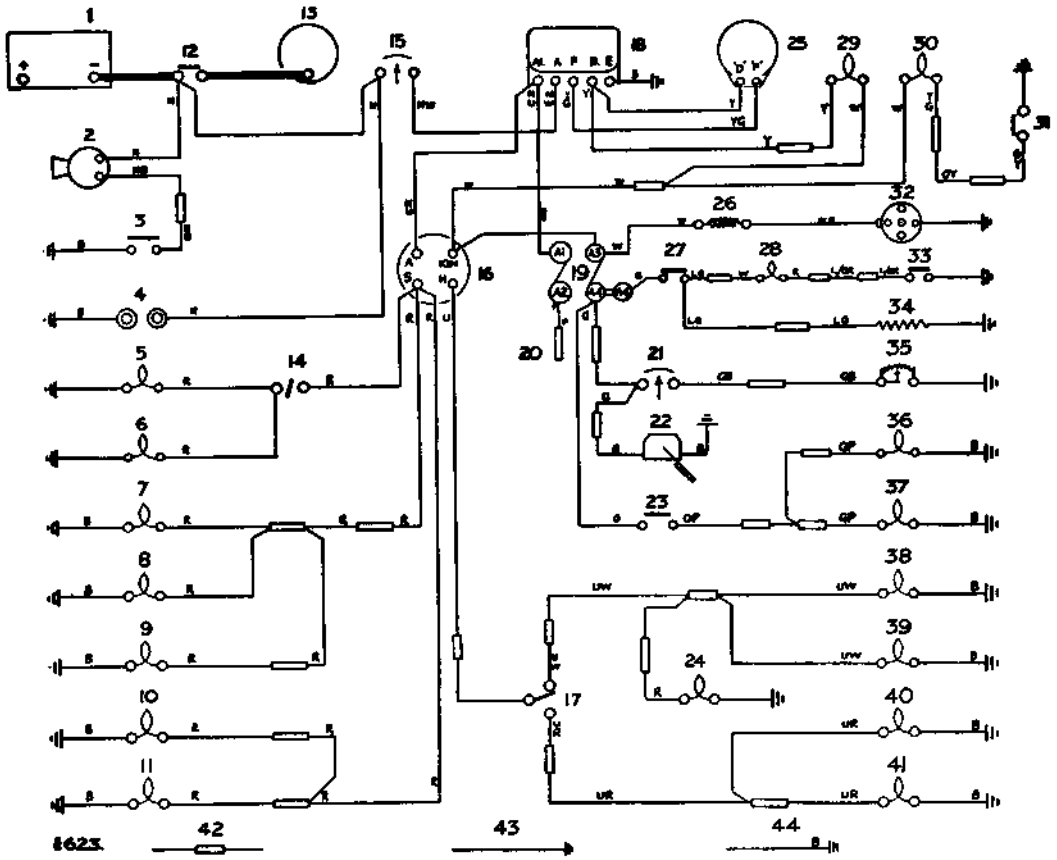


**Fig. N1-2. Circuit diagram, 2½ litre Petrol models, Series IIA, positive earth**

1 Battery, 12 volt
2 Horn
3 Horn push button
4 Inspection light sockets
5 Panel illumination
6 Panel illumination
7 Tail light
8 Number plate illumination
9 Tail light
10 Side light
11 Side light
12 Starter switch
13 Starter
14 Panel light switch
15 Ammeter
16 Ignition and lighting switch
17 Headlight dip switch
18 Voltage control box
19 Fuse box
20 To interior lights
21 Fuel gauge
22 Screen wiper, plug and socket
23 Stop light switch
24 Main beam warning light
25 Dynamo
26 Ignition coil
27 Mixture switch
28 Mixture warning light
29 Charging warning light
30 Oil pressure warning light
31 Oil pressure switch
32 Distributor
33 Mixture thermostat switch
34 Carburetter heater element, optional equipment
35 Gauge, fuel tank
36 Stop light
37 Stop light
38 Headlight, main
39 Headlight, main
40 Headlight, dip
41 Headlight, dip
42 Snap connectors
43 Earth connections via terminals and fixing bolts
44 Earth connections via cables

**Key to cable colours**

B—Black G—Green N—Brown P—Purple R—Red U—Blue W—White Y—Yellow RN—Red with Brown, and so on

When cables have two-colour code letters, the first denotes the main and the latter the tracer.
On vehicles to the North American specification, the connections at the lighting switch are such that the sidelamps are extinguished when the headlamps are in use.

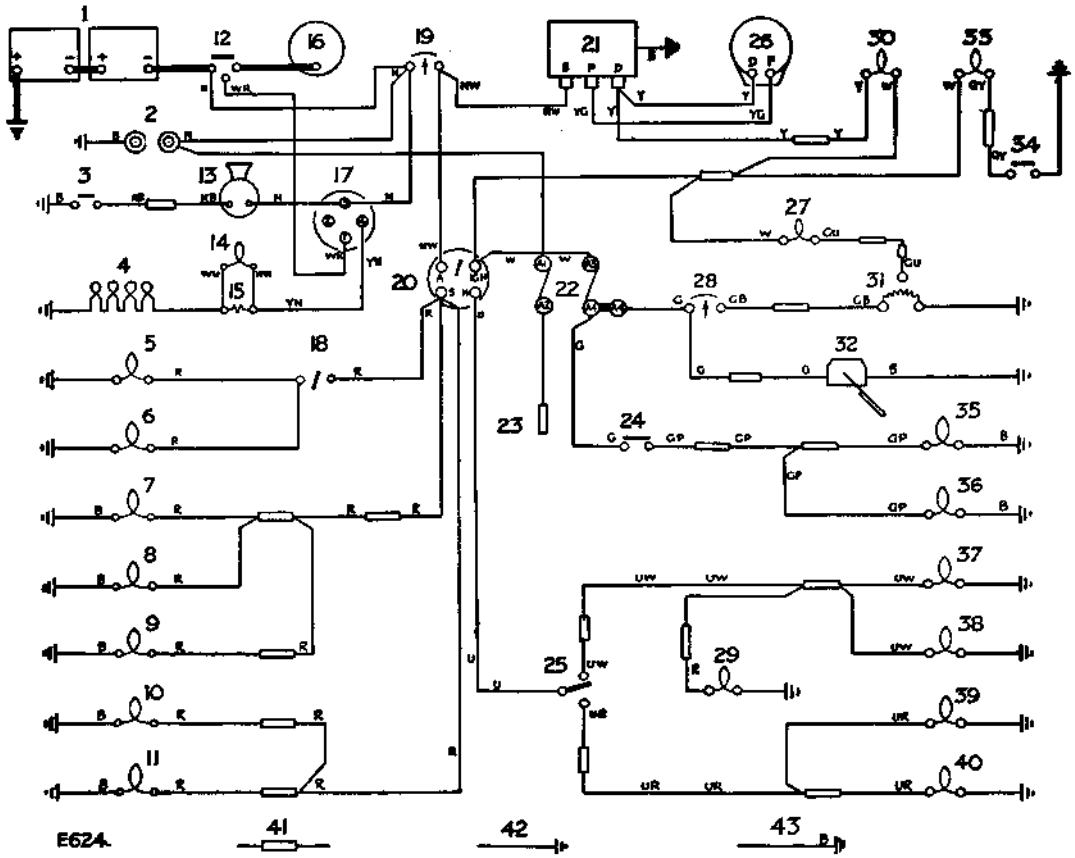


**Fig. N1-3. Circuit diagram, 2¼ litre Diesel models, Series IIA, positive earth**

1 Batteries, two, 6 volt positive earth
2 Inspection socket
3 Horn push button
4 Heater plugs
5 Panel illumination
6 Panel illumination
7 Tail lamp
8 Number plate illumination
9 Tail lamp
10 Side lamp
11 Side lamp
12 Switch, starter
13 Horn
14 Warning light, heater plug
15 Resistor for heater plug
16 Starter motor
17 Switch, heater plug
18 Switch, panel light
19 Ammeter
20 Switch, electrical services and lighting
21 Current-voltage regulator
22 Fuse box
23 To interior lights
24 Switch, stop light
25 Switch, headlamp dip
26 Dynamo
27 Warning light, fuel level
28 Fuel gauge
29 Warning light, headlamp main beam
30 Warning light, charging
31 Gauge unit, fuel tank
32 Wiper motor
33 Warning light, oil pressure
34 Switch, oil pressure warning light
35 Stop lamp
36 Stop lamp
37 Headlamp, main beam
38 Headlamp, main beam
39 Headlamp, dip beam
40 Headlamp, dip beam
41 Snap connectors
42 Earth connections via terminals or fixing bolts
43 Earth connections via cables

**Key to cable colours**

B—Black G—Green L—Light N—Brown O—Orange P—Purple R—Red S—Slate U—Blue W—White Y—Yellow
RN—Red with Brown, and so on

When cables have two-colour code letters, the first denotes the main and the latter the tracer.
On vehicles to the North American specification, the connections at the lighting switch are such that the sidelamps are extinguished when the headlamps are in use.

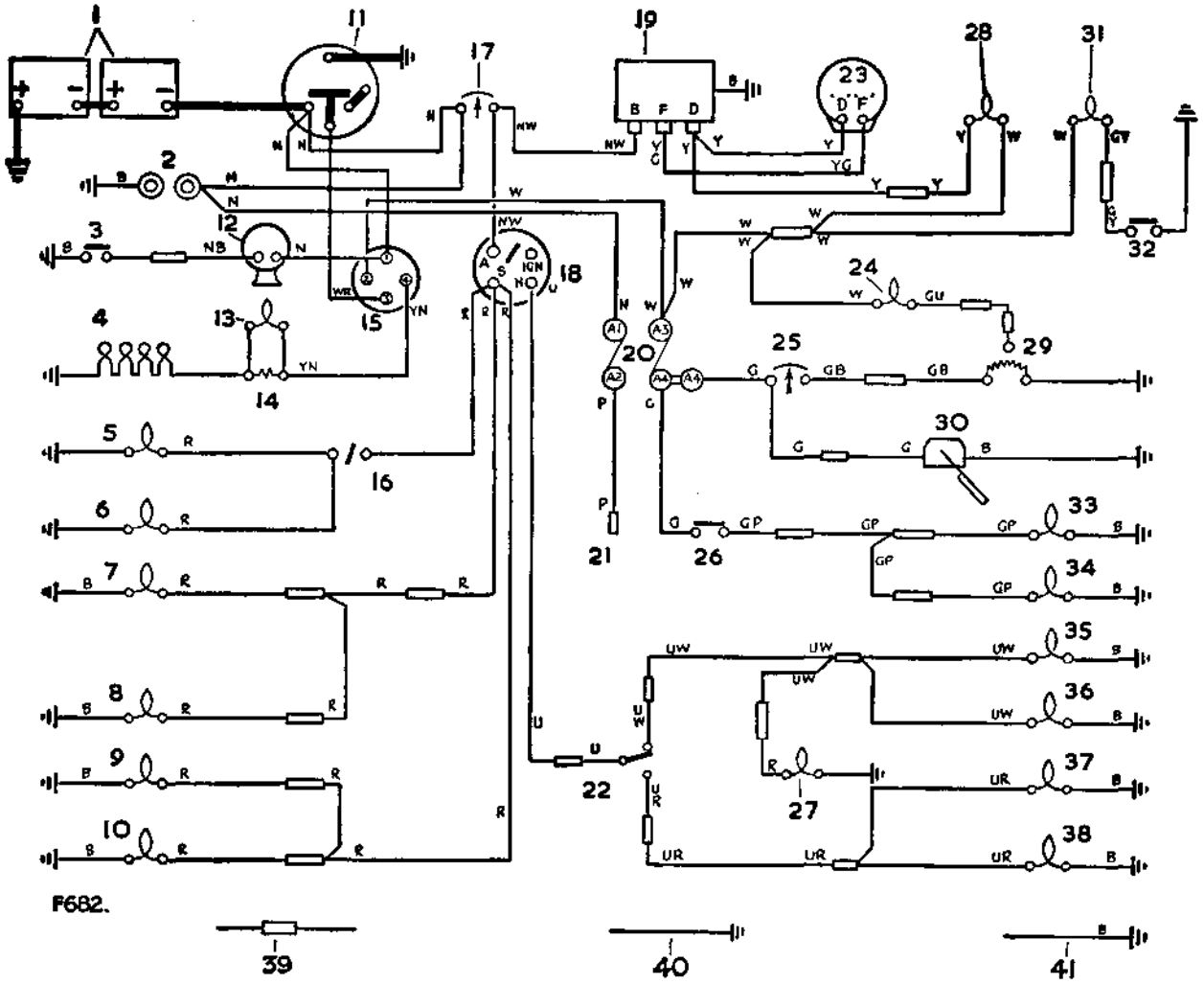


**Fig. N1-4. Circuit diagram, 'Regular' and 'Long', Diesel models, Series IIA, with combined electrical services, starter and heater plug switch, positive earth**

1 Batteries, two, 6 volt positive earth
2 Inspection socket
3 Horn push button
4 Heater plugs
5 Panel illumination
6 Panel illumination
7 Tail and number plate illumination lamp
8 Tail and number plate illumination lamp
9 Side lamp
10 Side lamp
11 Starter motor
12 Horn
13 Warning light, heater plug
14 Resistance for heater plug
15 Electrical services, starter and heater plug switch
16 Switch, panel light
17 Ammeter
18 Lighting switch
19 Current-voltage regulator
20 Fuse box
21 To interior lights
22 Switch, headlamp dip
23 Dynamo
24 Warning light, fuel level
25 Fuel gauge
26 Switch, stop light
27 Warning light, headlamp main beam
28 Warning light, charging
29 Gauge unit, fuel tank
30 Windscreen wiper motor
31 Warning light, oil pressure
32 Switch, oil pressure warning light
33 Stop lamp
34 Stop lamp
35 Headlamp, main beam
36 Headlamp, main beam
37 Headlamp, dip beam
38 Headlamp, dip beam
39 Snap connectors
40 Earth connections via terminals or fixing bolts
41 Earth connections via cables

**Key to cable colours**

B—Black G—Green S—Slate N—Brown P—Purple O—Orange R—Red U—Blue L—Light W—White Y—Yellow
RN—Red with Brown, and so on

When cables have two-colour code letters, the first denotes the main and the latter the tracer colour.

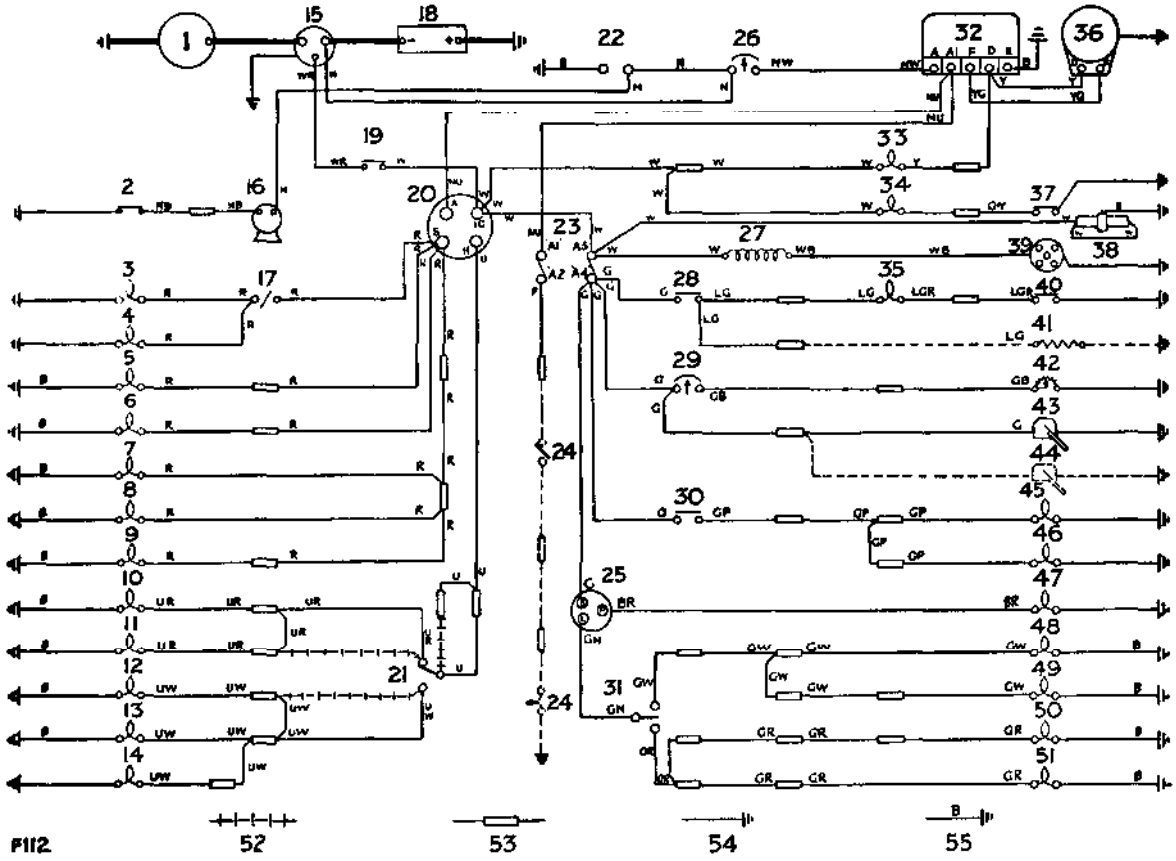


**Fig. N1-5. Circuit diagram, 'Forward Control', Petrol models, Series IIA, positive earth**

1 Starter motor
2 Horn push button
3 Panel illumination
4 Panel illumination
5 LH side light
6 RH side light
7 RH tail light
8 Number plate illumination
9 LH tail light
10 RH head light, dip
11 LH head light, dip
12 LH head light, main beam
13 RH head light, main beam
14 Main beam warning light
15 Starter solenoid
16 Horn
17 Switch, panel light
18 Battery
19 Switch, starter
20 Switch, lighting and ignition
21 Switch, headlamp dip
22 Inspection socket
23 Fuse box
24 Interior light switch and bulb, when fitted
25 Flasher unit
26 Ammeter
27 Ignition coil
28 Switch, mixture
29 Fuel gauge
30 Switch, stop light
31 Switch, flashers
32 Voltage control box
33 Warning light, charging
34 Warning light, oil pressure
35 Warning light, choke
36 Dynamo
37 Switch, oil pressure
38 Dual fuel pump, 6 cylinder models
39 Distributor
40 Switch, mixture thermostat
41 Carburetter heater element, when fitted
42 Gauge unit, fuel tank
43 Screen wiper
44 Second screen wiper, when fitted
45 RH stop light
46 LH stop light
47 Warning light, flashers
48 RH front flasher
49 RH rear flasher
50 LH rear flasher
51 LH front flasher
52 Wiring, LHStg models
53 Snap connector
54 Earth connections via fixing bolts
55 Earth connections via cables

**Key to cable colours**

B—Black G—Green L—Light N—Brown P—Purple R—Red U—Blue W—White Y—Yellow RN—Red with Brown, and so on

When cables have two-colour code letters the first denotes the main and the latter the tracer.

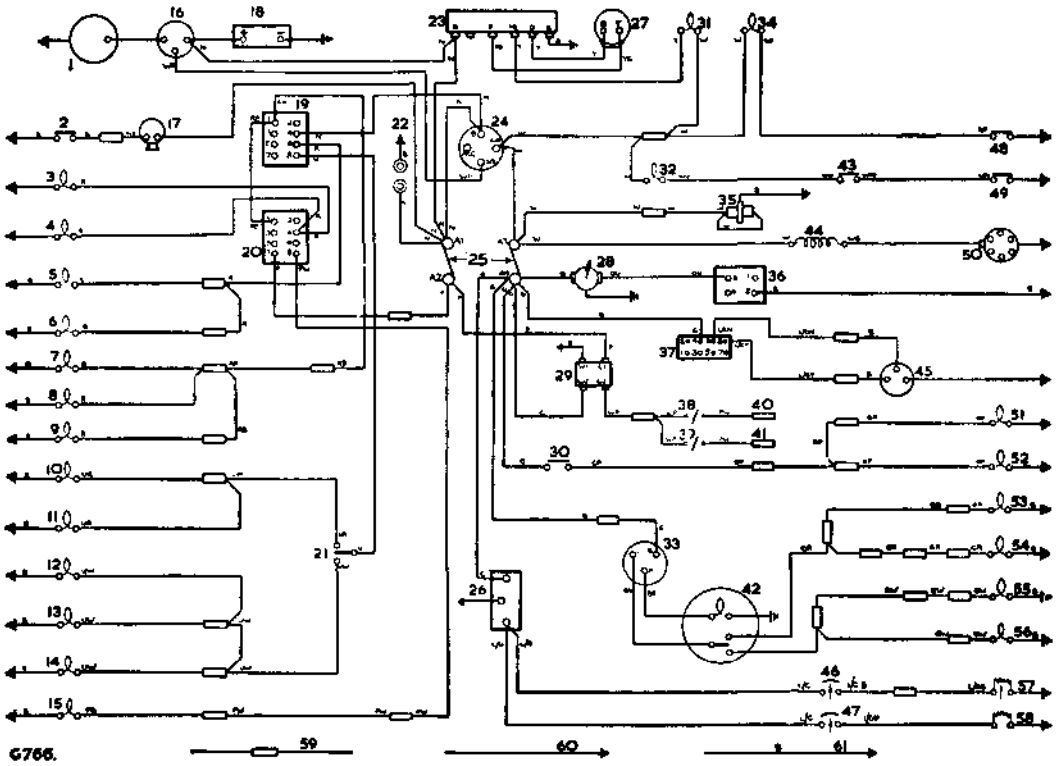


**Fig. N1-6. Circuit diagram, North American dollar area, 2.6 litre 109 Station Wagon, LHStg, negative earth**

1 Starter motor
2 Horn push
3 Panel illumination
4 Panel illumination
5 Side lamp, RH
6 Side lamp, LH
7 Tail lamp, RH
8 Number plate illumination
9 Tail lamp, LH
10 Headlamp dip, RH
11 Headlamp dip, LH
12 Headlamp main beam, RH
13 Headlamp main beam, LH
14 Headlamp main beam warning light
15 Interior light
16 Starter solenoid
17 Horn
18 Battery
19 Lighting switch
20 Panel and interior light switch
21 Foot dipper switch
22 Inspection lamp socket
23 Voltage regulator
24 Ignition/starter switch
25 Fuses
26 10 volt stabiliser
27 Dynamo
28 Windscreen wiper motor
29 Relay for heated windscreen
30 Stop light switch
31 Ignition warning light
32 Choke warning light
33 Direction indicator unit
34 Oil pressure warning light
35 Dual petrol pump
36 Windscreen wiper switch
37 Heater switch
38 Switch for heated windscreen, screen No. 1
39 Switch for heated windscreen, screen No. 2
40 Heated windscreen, screen No. 1
41 Heated windscreen, screen No. 2
42 Direction indicator switch
43 Choke switch
44 Coil
45 Two-speed heater unit
46 Fuel gauge
47 Water temperature gauge
48 Oil pressure switch
49 Choke thermostat
50 Distributor
51 Stop lamp, LH
52 Stop lamp, RH
53 Indicator lamp, LH front
54 Indicator lamp, LH rear
55 Indicator lamp, RH rear
56 Indicator lamp, RH front
57 Fuel tank unit
58 Water temperature transmitter
59 Snap connector
60 Earth connections via terminals or fixing bolts
61 Earth connections made via cables

**Cable colour code**

B—Black P—Purple W—White R—Red N—Brown Y—Yellow U—Blue G—Green L—Light

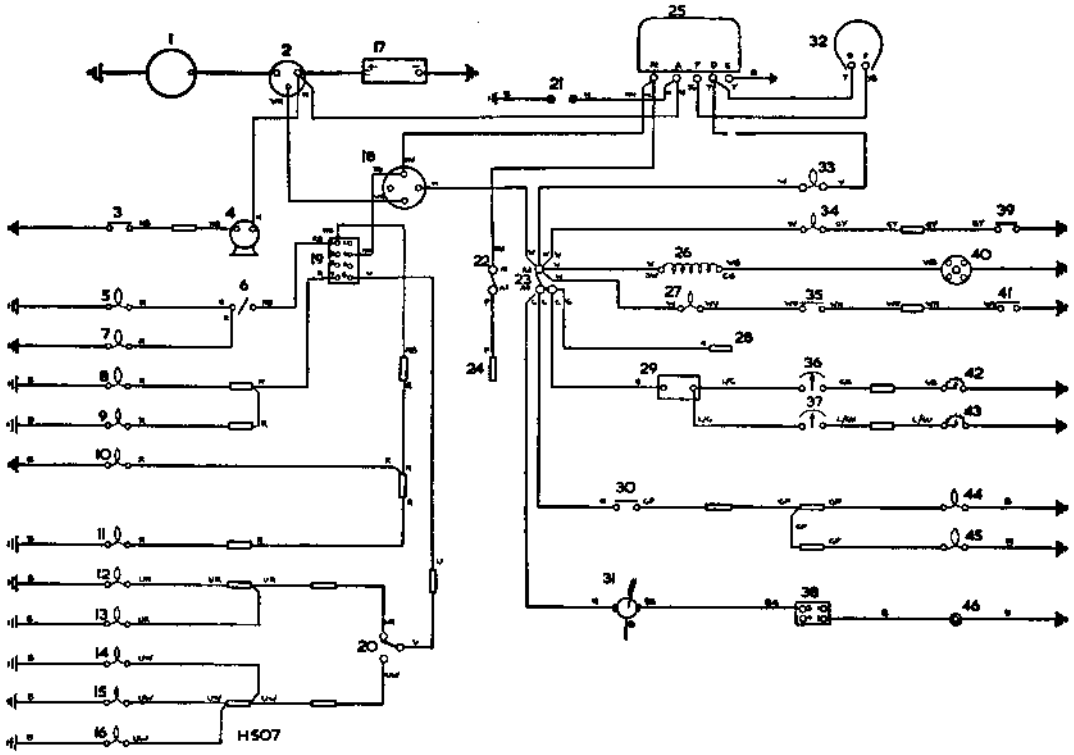


**Fig. N1-7. Circuit diagram, 2¼ litre 'Regular', 'Long' and Station Wagon, Petrol models, negative earth**

1 Starter motor
2 Solenoid, starter motor
3 Horn push button
4 Horn
5 Panel light, speedometer
6 Switch, panel light
7 Panel light, instruments
8 Side lamp, RH
9 Side lamp, LH
10 Tail lamp, RH
11 Tail lamp, LH
12 Headlamp, RH, dipped beam
13 Headlamp, LH, dipped beam
14 Headlamp, LH, main beam
15 Headlamp, RH, main beam
16 Warning light, headlamp main beam
17 Battery, 12 volt
18 Switch, ignition and starter
19 Switch, lights
20 Switch, headlamp dip
21 Inspection sockets
22 Fuse, A1-A2 (35 amp)
23 Fuse, A3-A4 (35 amp)
24 Feed, interior light
25 Regulator box
26 Ignition coil
27 Warning light, choke
28 Feed, flasher lights
29 Voltage stabiliser, fuel gauge and temperature gauge
30 Switch, stop lamp
31 Wiper motor
32 Dynamo
33 Warning light, ignition
34 Warning light, oil pressure
35 Switch, cold start on control
36 Fuel gauge
37 Temperature gauge
38 Switch, wiper
39 Switch, oil pressure
40 Distributor
41 Switch, cold start in cylinder head
42 Fuel tank unit
43 Temperature transmitter unit
44 Stop lamp, RH
45 Stop lamp, LH
46 Socket, wiper lead

Snap and Lucar connections —□—

Earth connections —⏚—

**Cable colour code**

B—Black P—Purple W—White R—Red N—Brown Y—Yellow U—Blue G—Green L—Light

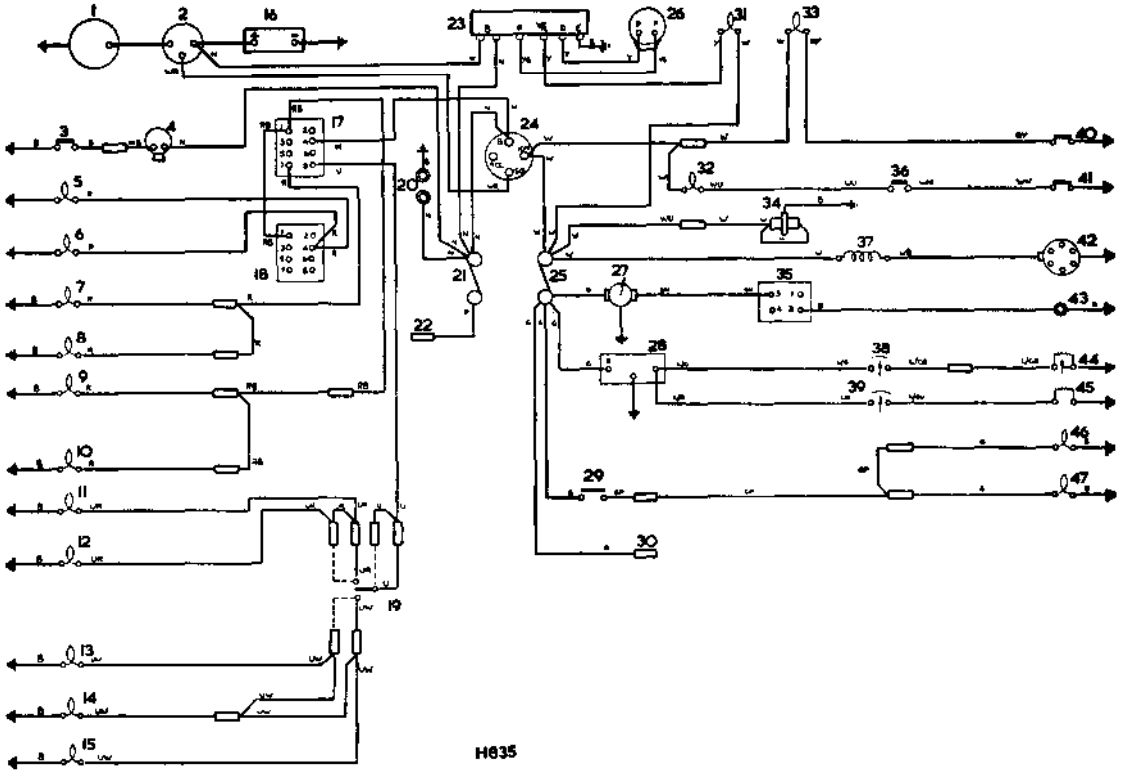


**Fig. N1-8. Circuit diagram, 6 cylinder 'Long' and Station Wagon, Petrol models, negative earth**

1 Starter motor
2 Solenoid, starter motor
3 Horn push button
4 Horn
5 Panel illumination
6 Panel illumination
7 Side lamp, RH
8 Side lamp, LH
9 Tail lamp, RH
10 Tail lamp, LH
11 Headlamp, RH dipped beam
12 Headlamp, LH dipped beam
13 Headlamp, LH main beam
14 Warning light, main beam
15 Headlamp, RH main beam
16 Battery
17 Switch, lights
18 Switch, panel lights
19 Switch, headlamp dip
20 Inspection lamp sockets
21 Fuse, A1-A2
22 Feed, interior light, where fitted
23 Regulator box
24 Switch, ignition and starter
25 Fuse, A3-A4
26 Dynamo
27 Wiper motor
28 Voltage stabiliser, fuel gauge and temperature gauge
29 Switch, stop lamp
30 Feed, flasher lights (where fitted)
31 Warning light, ignition
32 Warning light, cold start
33 Warning light, oil pressure
34 Dual fuel pump
35 Switch, wiper
36 Switch, cold start, on control
37 Ignition coil
38 Fuel gauge
39 Water temperature indicator
40 Switch, oil pressure
41 Switch, cold start, in cylinder head
42 Distributor
43 Socket, wiper lead
44 Fuel tank unit
45 Water temperature transmitter
46 Stop lamp, LH
47 Stop lamp, RH

Snap and Lucar connections —□—

Earth connections via terminals or fixing bolts —▮▮▮—

Earth connections via cables —B▮▮▮—

**Cable colour code**

B—Black P—Purple W—White R—Red N—Brown Y—Yellow U—Blue G—Green O—Orange S—Slate L—Light

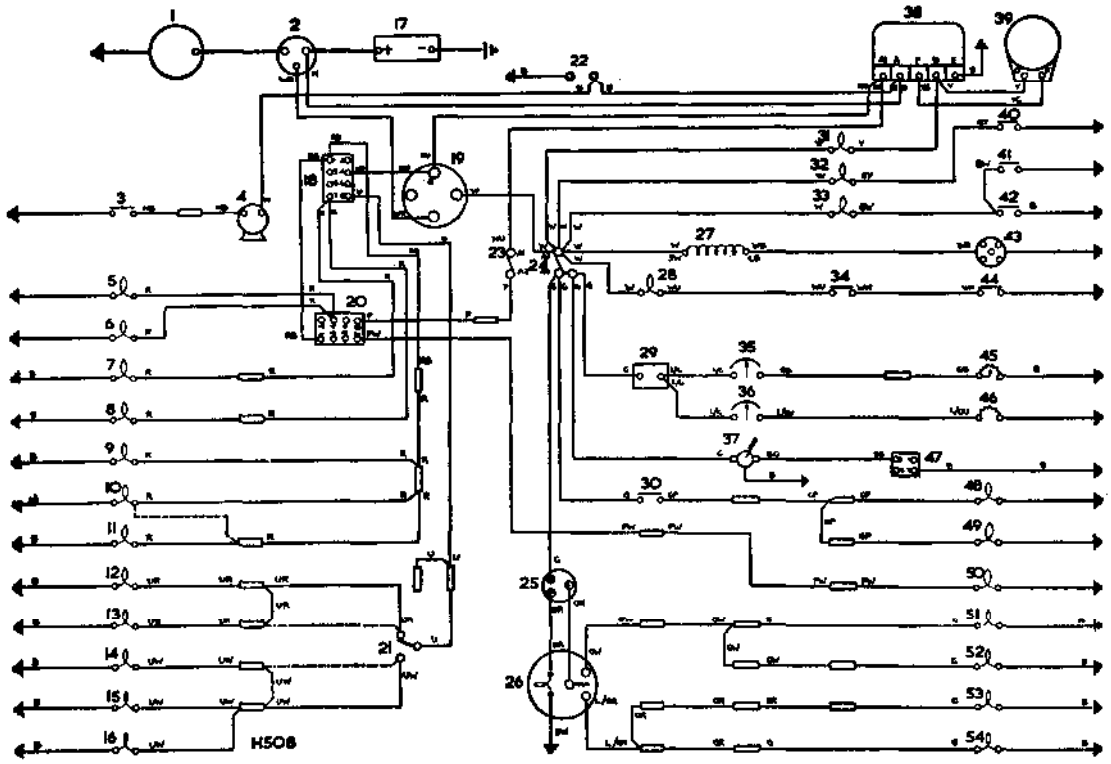


**Fig. N1-9, Circuit diagram, 2¼ litre Forward Control, Petrol models, Series IIA, negative earth**

1 Starter motor
2 Solenoid, starter motor
3 Horn push button
4 Horn
5 Panel light, speedometer
6 Panel light, instruments
7 Side lamp, LH
8 Side lamp, RH
9 Tail lamp, RH
10 Number plate lamp
11 Tail lamp, LH
12 Headlamp, RH, dipped beam
13 Headlamp, LH, dipped beam
14 Headlamp, LH, main beam
15 Headlamp, RH, main beam
16 Warning light, main beam
17 Battery, 12 volt
18 Switch, lights
19 Switch, ignition and starter
20 Switch, panel and interior light
21 Switch, headlamp dip
22 Inspection sockets
23 Fuse, A1-A2 (35 amp)
24 Fuse, A3-A4 (35 amp)
25 Flasher unit
26 Switch and warning light, flasher lamps
27 Ignition coil
28 Warning light, choke
29 Voltage stabiliser, fuel gauge and temperature gauge
30 Switch, stop lamp
31 Warning light, ignition
32 Warning light, oil pressure
33 Warning light, brake fluid reservoir
34 Switch, cold start on control
35 Fuel gauge
36 Temperature gauge
37 Wiper motor
38 Regulator box
39 Dynamo
40 Switch, oil pressure
41 Switch, brake fluid reservoir
42 Switch, hand brake
43 Distributor
44 Switch, cold start in cylinder head
45 Fuel tank unit
46 Water temperature transmitter
47 Switch, wiper motor
48 Stop lamp, RH
49 Stop lamp, LH
50 Interior lamp
51 Flasher lamp, front RH
52 Flasher lamp, rear RH
53 Flasher lamp, rear LH
54 Flasher lamp, front LH

Dotted lines indicate circuit on LHStg models

Snap and Lucar connections —[ ]—

Earth connections —⏚—

**Cable colour code**

B—Black P—Purple W—White R—Red N—Brown Y—Yellow U—Blue G—Green L—Light

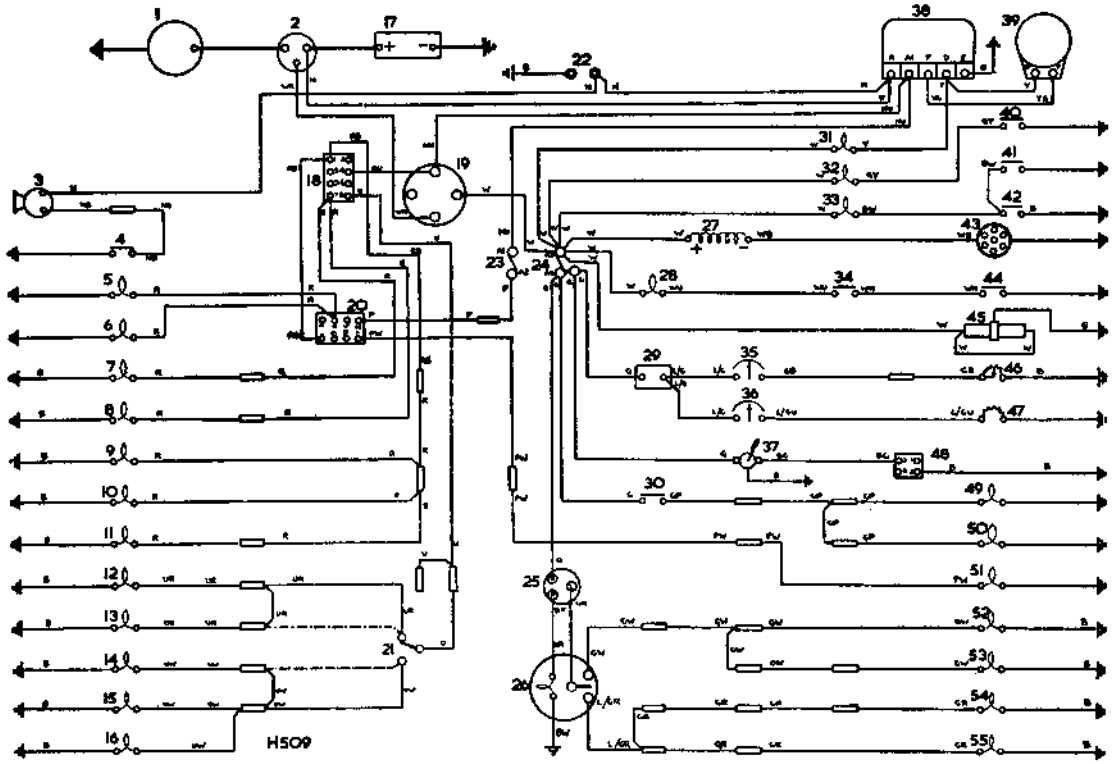


**Fig. N1-10. Circuit diagram, 6 cylinder Forward Control, Petrol models, Series IIA, negative earth**

1 Starter motor
2 Solenoid, starter motor
3 Horn
4 Horn push button
5 Panel light, speedometer
6 Panel light, instruments
7 Side lamp, LH
8 Side lamp, RH
9 Tail lamp, RH
10 Number plate lamp
11 Tail lamp, LH
12 Headlamp, RH, dipped beam
13 Headlamp, LH, dipped beam
14 Headlamp, LH, main beam
15 Headlamp, RH, main beam
16 Warning light, main beam
17 Battery, 12 volt
18 Switch, lights
19 Switch, ignition and starter
20 Switch, panel and interior light
21 Switch, headlamp dip
22 Inspection sockets
23 Fuse, A1-A2 (35 amp)
24 Fuse, A3-A4 (35 amp)
25 Flasher unit
26 Switch and warning light, flasher lamps
27 Ignition coil
28 Warning light, choke
29 Voltage stabiliser, fuel gauge and water temperature gauge
30 Switch, stop lamp
31 Warning lights, ignition
32 Warning light, oil pressure
33 Warning light, brake fluid reservoir
34 Switch, cold start on control
35 Fuel gauge
36 Temperature gauge
37 Wiper motor
38 Regulator box
39 Dynamo
40 Switch, oil pressure
41 Switch, brake fluid reservoir
42 Switch, brake servo
43 Distributor
44 Switch, cold start in cylinder head
45 Fuel pump
46 Fuel tank unit
47 Water temperature transmitter
48 Switch, wiper motor
49 Stop lamp, RH
50 Stop lamp, LH
51 Interior lamp
52 Flasher lamp, front RH
53 Flasher lamp, rear RH
54 Flasher lamp, rear LH
55 Flasher lamp, front LH

Dotted lines indicate circuit on LHStg models

Snap and Lucar connections —□—

Earth connections —⏚—

**Cable colour code**

B—Black P—Purple W—White R—Red N—Brown Y—Yellow U—Blue G—Green L—Light

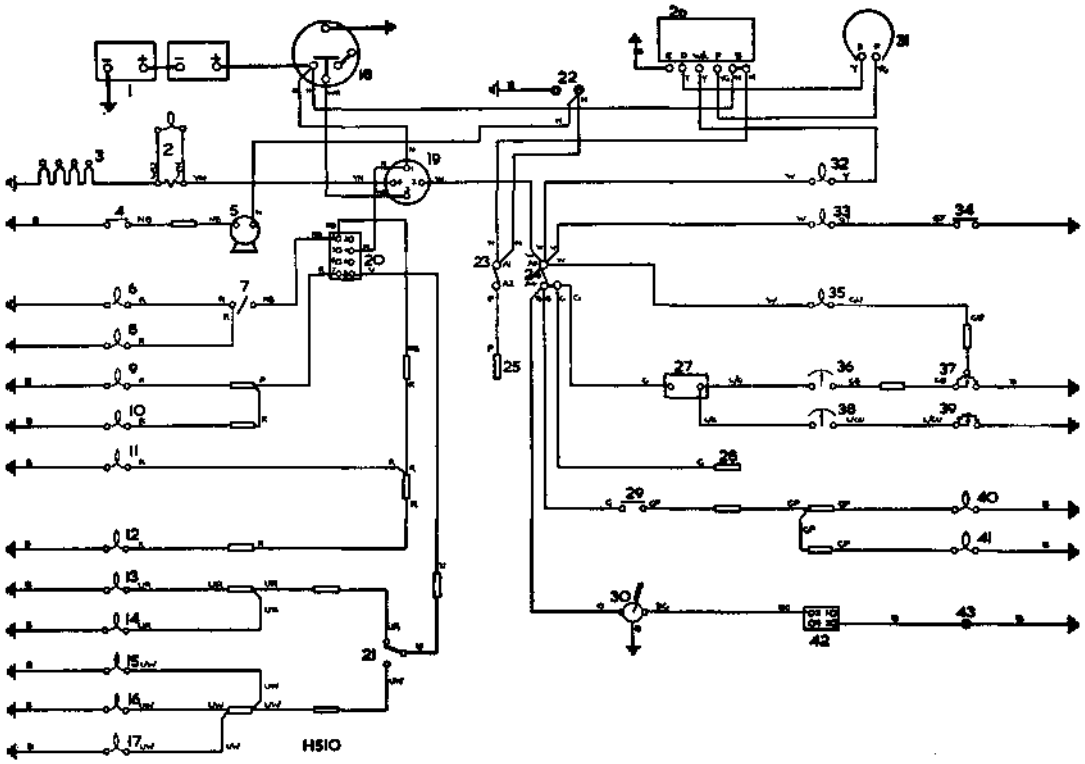


**Fig. N1-11. Circuit diagram, 2¼ litre 'Regular', 'Long' and Station Wagon, Diesel models, Series IIA, negative earth**

1 Batteries, two 6 volt
2 Warning light and resistor, heater plugs
3 Heater plugs
4 Horn push button
5 Horn
6 Panel light, speedometer
7 Switch, panel light
8 Panel light, instrument
9 Side lamp, RH
10 Side lamp, LH
11 Tail lamp, RH
12 Tail lamp, LH
13 Headlamp, RH, dipped beam
14 Headlamp, LH, dipped beam
15 Headlamp, LH, main beam
16 Headlamp, RH, main beam
17 Warning light, headlamp main beam
18 Starter motor
19 Switch, starter-heater plugs
20 Switch, lights
21 Switch, headlamp dip
22 Inspection sockets
23 Fuse, A1-A2 (35 amp)
24 Fuse, A3-A4 (35 amp)
25 Feed, interior light
26 Regulator box
27 Voltage stabiliser, fuel gauge and water temperature gauge
28 Feed, flasher lights
29 Switch, stop lamp
30 Wiper motor
31 Dynamo
32 Warning light, dynamo
33 Warning light, oil pressure
34 Switch, oil pressure
35 Warning light, fuel level
36 Fuel gauge
37 Fuel tank unit
38 Temperature gauge
39 Temperature transmitter unit
40 Stop lamp, RH
41 Stop lamp, LH
42 Switch, wiper motor
43 Socket, wiper lead

Snap and Lucar connections —□—

Earth connections —⏚—

**Cable colour code**

B—Black P—Purple W—White R—Red N—Brown Y—Yellow U—Blue G—Green L—Light

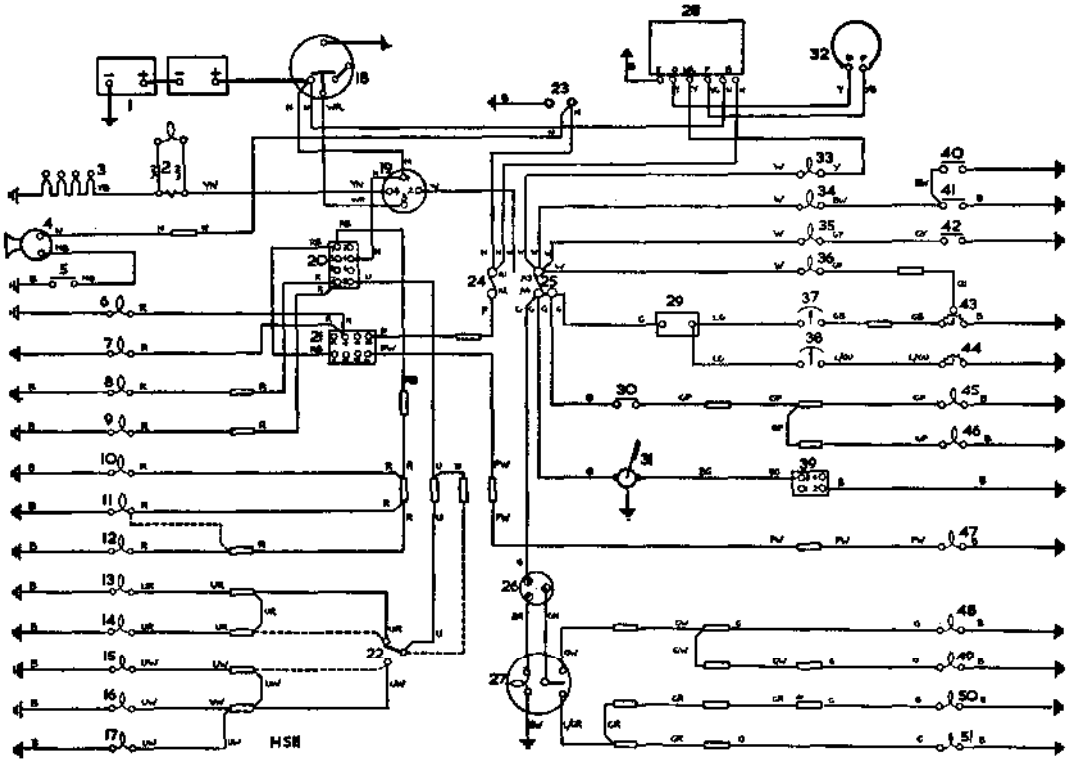


**Fig. N1-12. Circuit diagram, 4 cylinder Forward Control, Diesel models, Series IIA, negative earth**

1 Batteries, two 6 volt
2 Warning light and resistor, heater plugs
3 Heater plugs
4 Horn
5 Horn push button
6 Panel light, speedometer
7 Panel light, instrument
8 Side lamp, RH
9 Side lamp, LH
10 Tail lamp, RH
11 Number plate lamp
12 Tail lamp, LH
13 Headlamp, RH, dipped beam
14 Headlamp, LH, dipped beam
15 Headlamp, LH, main beam
16 Headlamp, RH, main beam
17 Warning light, main beam
18 Starter motor
19 Switch, starter-heater plugs
20 Switch, lights
21 Switch, panel and interior light
22 Switch, headlamp dip
23 Inspection sockets
24 Fuse, A1-A2 (35 amp)
25 Fuse, A3-A4 (35 amp)
26 Flasher unit
27 Switch and warning light, flasher
28 Regulator box
29 Voltage stabiliser, fuel gauge and temperature gauge
30 Switch, stop lamp
31 Wiper motor
32 Dynamo
33 Warning light, dynamo
34 Warning light, brake fluid reservoir
35 Warning light, oil pressure
36 Warning light, fuel level
37 Fuel gauge
38 Temperature gauge
39 Switch, wiper motor
40 Switch, brake fluid reservoir
41 Switch, brake servo
42 Switch, oil pressure
43 Fuel tank unit
44 Temperature transmitter
45 Stop lamp, RH
46 Stop lamp, LH
47 Interior lamp
48 Flasher lamp, front RH
49 Flasher lamp, rear RH
50 Flasher lamp, rear LH
51 Flasher lamp, front LH

Dotted lines indicate circuit on LHSeg models

Snap and Lucar connections —[ ]—

Earth connections —|||—

**Cable colour code**

B—Black P—Purple W—White R—Red N—Brown Y—Yellow U—Blue G—Green L—Light

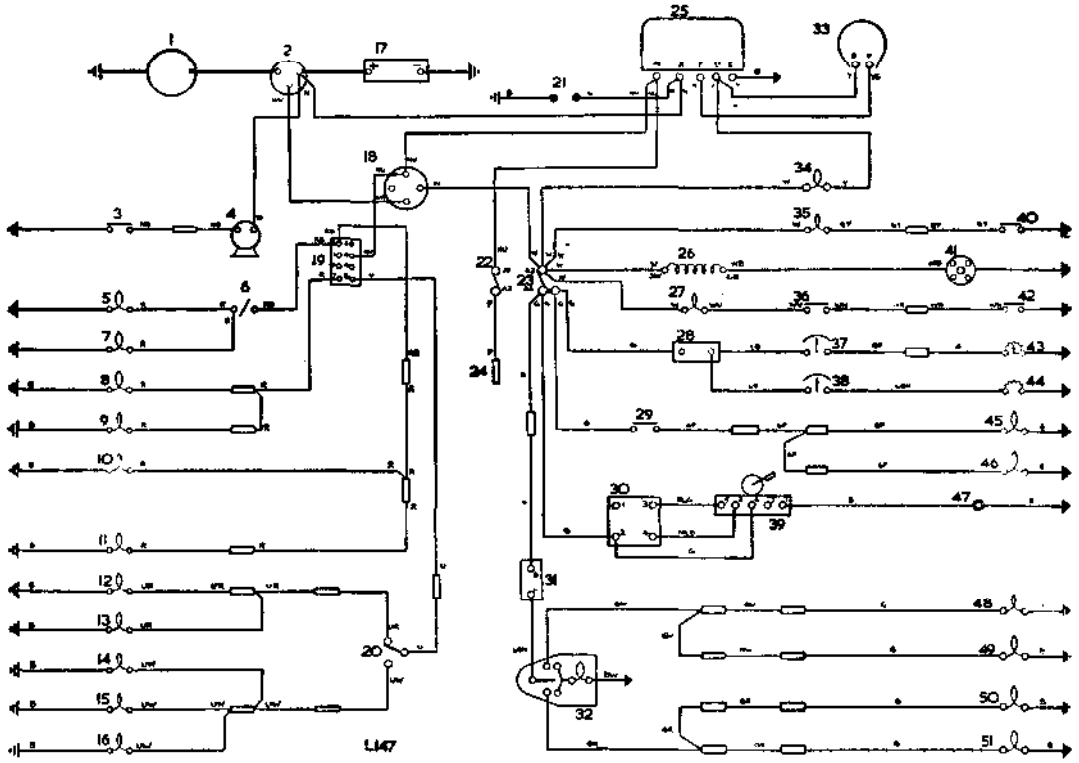


**Fig. N1-13. Circuit diagram, 4 cylinder 'Regular', 'Long' and Station Wagon, Petrol models, negative earth, with headlamps mounted in front wings**

1 Starter motor
2 Solenoid, starter motor
3 Horn push button
4 Horn
5 Panel light, speedometer
6 Switch, panel light
7 Panel light, instruments
8 Side lamp, RH
9 Side lamp, LH
10 Tail lamp, RH
11 Tail lamp, LH
12 Headlamp, RH, dipped beam
13 Headlamp, LH, dipped beam
14 Headlamp, LH, main beam
15 Headlamp, RH, main beam
16 Warning light, headlamp main beam
17 Battery, 12 volt
18 Switch, ignition and starter
19 Switch, lights
20 Switch, headlamp dip
21 Inspection sockets
22 Fuse, A1-A2 (35 amp)
23 Fuse, A3-A4 (35 amp)
24 Feed, interior light
25 Regulator box
26 Ignition coil
27 Warning light, choke
28 Voltage stabiliser, fuel gauge and temperature gauge
29 Switch, stop lamp
30 Switch, wiper
31 Flasher indicator unit
32 Switch and warning light, flashers
33 Dynamo
34 Warning light, ignition
35 Warning light, oil pressure
36 Switch, cold start on control
37 Fuel gauge
38 Temperature gauge
39 Wiper motor
40 Switch, oil pressure
41 Distributor
42 Switch, cold start in cylinder head
43 Fuel tank unit
44 Temperature transmitter unit
45 Stop lamp, RH
46 Stop lamp, LH
47 Socket, wiper lead
48 Front flasher, RH
49 Rear flasher, RH
50 Rear flasher, LH
51 Front flasher, LH

Snap and Lucar connections —□—
Earth connections —⏚—

**Cable colour code**

B—Black P—Purple W—White R—Red N—Brown Y—Yellow U—Blue G—Green L—Light

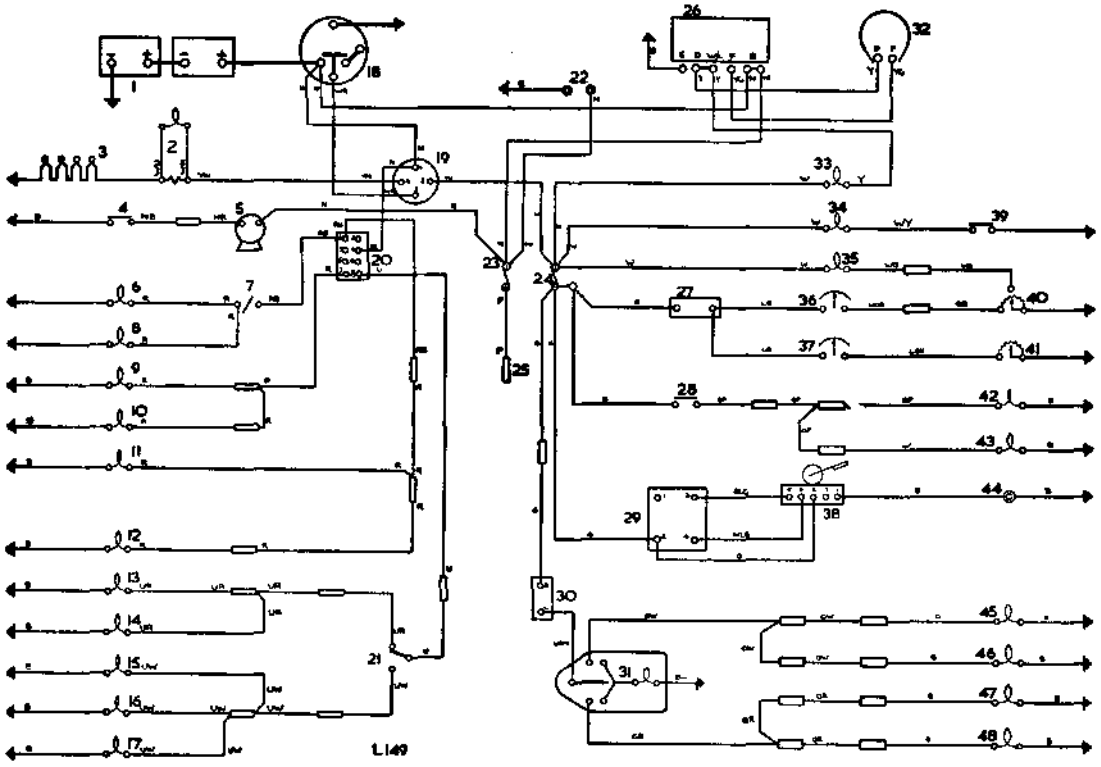


**Fig. N1-14. Circuit diagram, 4 cylinder 'Regular', 'Long' and Station Wagon, Diesel models, negative earth, with headlamps mounted in front wings**

1 Batteries, two 6 volt
2 Warning light and resistor, heater plugs
3 Heater plugs
4 Horn push button
5 Horn
6 Panel light, speedometer
7 Switch, panel light
8 Panel light, instrument
9 Side lamp, RH
10 Side lamp, LH
11 Tail lamp, RH
12 Tail lamp, LH
13 Headlamp, RH, dipped beam
14 Headlamp, LH, dipped beam
15 Headlamp, LH, main beam
16 Headlamp, RH, main beam
17 Warning light, headlamp main beam
18 Starter motor
19 Switch, starter-heater plugs
20 Switch, lights
21 Switch, headlamp dip
22 Inspection sockets
23 Fuse, A1-A2 (35 amp)
24 Fuse, A3-A4 (35 amp)
25 Feed, interior light
26 Regulator box
27 Voltage stabiliser, fuel gauge and water temperature gauge
28 Switch, stop lamp
29 Switch, wiper motor
30 Indicator unit, flasher
31 Switch and warning light, flasher
32 Dynamo
33 Warning light, dynamo
34 Warning light, oil pressure
35 Warning light, fuel level
36 Fuel gauge
37 Temperature gauge
38 Wiper motor
39 Switch, oil pressure
40 Fuel tank unit
41 Temperature transmitter unit
42 Stop lamp, RH
43 Stop lamp, LH
44 Socket, wiper lead
45 Front flasher, RH
46 Rear flasher, RH
47 Rear flasher, LH
48 Front flasher, LH

Snap and Lucar connections —□—

Earth connections —▬—

**Cable colour code**

B—Black P—Purple W—White R—Red N—Brown Y—Yellow U—Blue G—Green L—Light

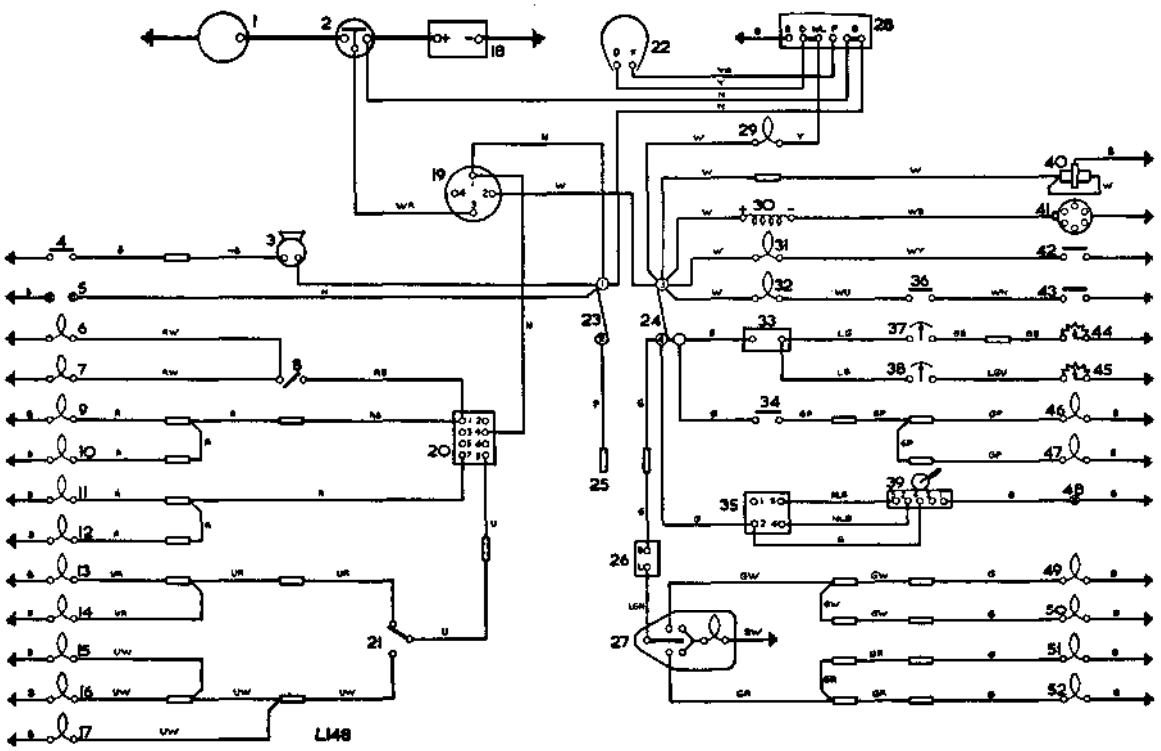


**Fig. N1-15. Circuit diagram, 6 cylinder 'Long' and Station Wagon, Petrol models, negative earth, with headlamps mounted in front wings**

1 Starter motor
2 Solenoid, starter motor
3 Horn
4 Horn push button
5 Inspection lamp sockets
6 Panel illumination
7 Panel illumination
8 Switch, panel lights
9 Tail lamp, RH
10 Tail lamp, LH
11 Side lamp, RH
12 Side lamp, LH
13 Headlamp, RH, dipped beam
14 Headlamp, LH, dipped beam
15 Headlamp, LH, main beam
16 Headlamp, RH, main beam
17 Warning light, main beam
18 Battery
19 Switch, ignition and starter
20 Switch, lights
21 Switch, headlamp dip
22 Dynamo
23 Fuse, A1-A2
24 Fuse, A3-A4
25 Feed, interior light, where fitted
26 Indicator unit, flashers
27 Switch and warning light for flashers
28 Regulator box
29 Warning light, ignition
30 Ignition coil
31 Warning light, oil pressure
32 Warning light, cold start
33 Voltage stabiliser, 10 volt, fuel gauge and temperature gauge
34 Switch, stop lamp
35 Switch, wiper
36 Switch, cold start, on control
37 Fuel gauge
38 Water temperature indicator
39 Wiper motor
40 Dual fuel pump
41 Distributor
42 Switch, oil pressure
43 Switch, cold start, in cylinder head
44 Fuel tank unit
45 Water temperature transmitter
46 Stop lamp, LH
47 Stop lamp, RH
48 Socket, wiper feed
49 Front flasher, RH
50 Rear flasher, RH
51 Rear flasher, LH
52 Front flasher, LH

Snap and Lucar connections —□—

Earth connections via terminals or fixing bolts —⏚—

Earth connections via cables —B⏚—

**Cable colour code**

B—Black P—Purple W—White R—Red N—Brown Y—Yellow U—Blue G—Green O—Orange S—Slate L—Light

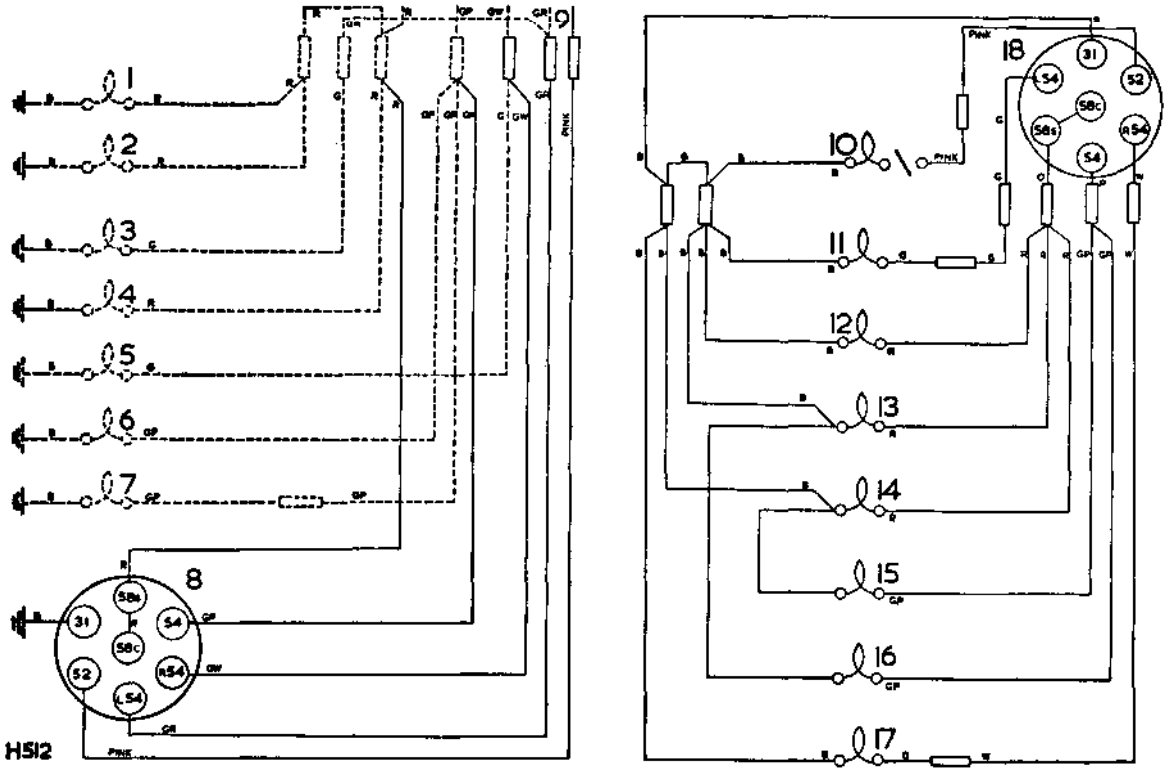


**Fig. N1-16. Circuit diagram, flashers on trailer, negative earth**

1 Tail lamp, LH
2 Number plate illumination, Forward Control only
3 Flasher lamp, LH
4 Tail lamp, RH
5 Flasher lamp, RH
6 Stop lamp, RH
7 Stop lamp, LH
8 Socket on vehicle
9 To fuse box A2
10 Interior lamp and switch

} Flasher socket on vehicle

11 Flasher lamp, LH
12 Number plate illumination
13 Tail lamp, LH
14 Tail lamp, RH
15 Stop lamp, RH
16 Stop lamp, LH
17 Flasher lamp, RH
18 Plug for trailer

} Flasher plug on trailer

Dotted lines indicate wiring on vehicle
Snap and Lucar connections —□—
Earth connections —⏚—

**Cable colour code**

B—Black P—Purple W—White R—Red N—Brown U—Blue G—Green L—Light

## Batteries, remove, refit and maintenance—Operation N1-1

Workshop hand tools:
Screwdriver (medium)

### General

All Petrol engine models are equipped with one 12 volt battery, all Diesel engine models are equipped with two 6 volt batteries connected in series. The batteries are located on the vehicle as follows:

'Regular' and 'Long' 4 cylinder Petrol models—under bonnet at right-hand side.

6 cylinder 'Long' models—under left-hand front seat.

'Regular' and 'Long' Diesel models—one under bonnet at right-hand side, the other under the left-hand seat.

### To remove

1. Disconnect the leads, remove the securing frame and lift battery clear (when removing one battery only—Diesel models—always remove the inter-connecting battery lead completely from both batteries).

### To refit

1. Reverse removal procedure, taking care to smear the battery terminals with petroleum jelly.

The drive screws securing the battery leads are manufactured from a special non-corrosive metal and must never be replaced with ordinary drive screws, which may cause serious corrosion of the battery terminals.

### Battery maintenance

Many cases of poor battery performance are caused by lack of care in their early life; it is extremely important to condition batteries in the early stages of their life in order that they will give adequate performance in service during their later life.

The more compact the battery design the more important it is that conditioning of a new battery should be carried out effectively.

A recharging label, together with the appropriate date, will be found on all new batteries and these instructions must be adhered to.

Dry charge batteries are essential for vehicles in transit over long journeys. Correct charging procedures must be followed when a new dry battery is commissioned. It is not sufficient to fill the dry battery with new electrolyte and then put the battery into service—it is essential that it is properly recharged and the specific gravity of the electrolyte checked.

The correct specific gravity of the electrolyte of a battery in good condition is:

### Temperate climate below 80°F (26.5°C)

As commissioned for service (fully charged) specific gravity 1.270 to 1.290. As expected during normal service (¾ charged) specific gravity 1.230 to 1.250.

If the specific gravity should read between 1.190 and 1.210 (½ charged), the battery should be bench re-charged and a check on the electrical equipment carried out.

### Tropical climate above 80°F (26.5°C)

As commissioned for service (fully charged) specific gravity 1.210 to 1.230. As expected during normal service (¾ charged) specific gravity 1.170 to 1.190.

If the specific gravity should read between 1.130 and 1.150 (½ charged), the battery should be bench re-charged and a check on the electrical equipment carried out.

### Check acid level as follows:

1. Wipe all dirt and moisture from the battery top.
2. Remove the filler plugs or manifold lid. If necessary add sufficient distilled water to raise the level to the top of separators. Replace the filler plugs.

   Avoid the use of a naked light when examining the cells.

In hot climates it will be necessary to top up the battery at more frequent intervals.

In very cold weather it is essential that the vehicle is used immediately after topping up, to ensure that the distilled water is thoroughly mixed with the electrolyte. Neglect of this precaution may result in the distilled water freezing and causing damage to the battery.

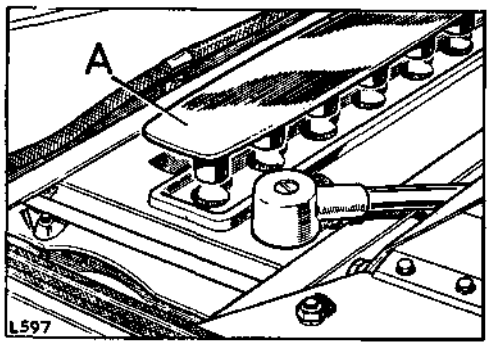


**Fig. N1-17. Battery maintenance**
A—Manifold lid

## Operation N1-1—*continued*

**Battery terminals**

Remove battery terminals, clean, grease and refit. Replace terminal screw, do not overtighten. Do not use the screw for pulling down the terminal.

**Battery tests**

If the performance of the battery has deteriorated, carry out the following tests to determine its condition and suitability for further service.

1. **Hydrometer tests**

   Measure the specific gravity of the acid in each cell in turn with a hydrometer. To facilitate this measurement being taken, insert a short glass tube into the hydrometer rubber tubing, of a diameter that will pass through one of the apertures in the separator guard. To avoid misleading results, do not take readings immediately after topping up; at least thirty minutes' charging at the normal re-charge rate is required after topping up to ensure true readings. The readings given by each of the cells should be approximately the same; if one cell differs appreciably from the others, an internal fault in that cell is indicated. This will probably be confirmed by the high rate discharge test.

2. **High rate discharge test**

   **Note:** Latest type batteries it will be seen that there are five small indentations on the battery lid; these coincide with the concealed inter-cell connectors underneath. Two are between and in line with the terminals, and three in line and on the opposite side to the terminals. These indentations must be pierced with a pointed tool to expose the inter-cell connectors and allow the battery to be tested with the high rate discharge tester.

   Using a high rate discharge tester, press the pointed prongs firmly against the exposed negative and positive connectors of each cell, and note the readings on the meter. A good cell will maintain a reading of 1.2–1.5 volts for 10 seconds. If the reading rapidly falls off, the cell is probably faulty, in which event a new plate assembly may have to be fitted.

   Re-seal the holes with sealing compound after testing.

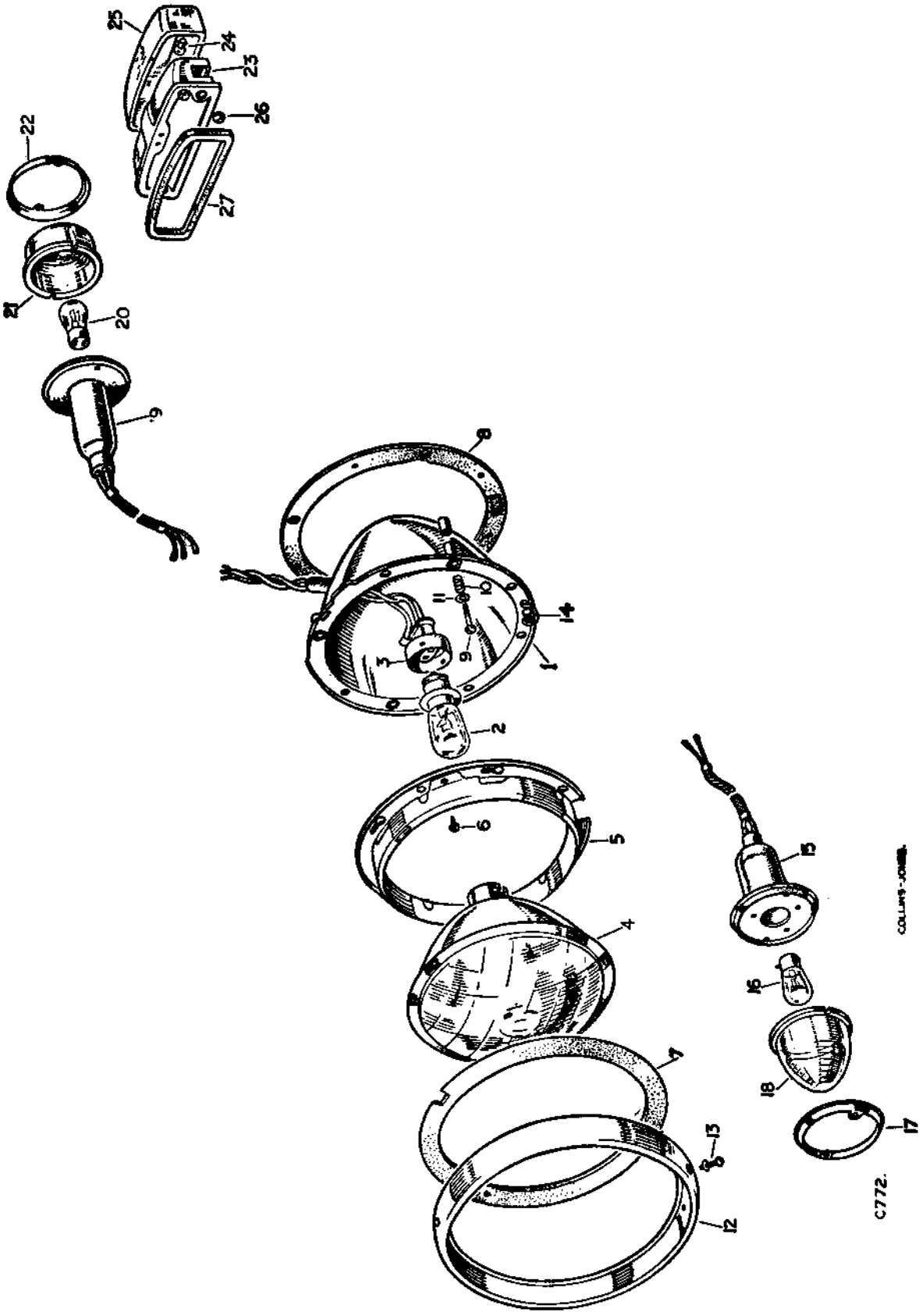


Fig. N1-18. Layout of head, side and tail lamps. Up to vehicle suffix 'A' inclusive. (Except America dollar area)

**Key to illustration of head, side and tail lamps. Up to vehicle suffix 'A' inclusive. (Except America dollar area)**

1 Body for headlamp
2 Bulb for headlamp
3 Adaptor for bulb, double contact
4 Light unit
5 Rim complete for light unit
6 Special screw for light unit rim
7 Rubber gasket for headlamp rim
8 Gasket for body
9 Special screw } Light unit adjustment
10 Spring for screw } Light unit adjustment
11 Cup washer for screw } Light unit adjustment
12 Rim for headlamp, chrome
13 Screw } Retaining rim
14 Spire nut } Retaining rim
15 Side lamp body
16 Bulb for side lamp
17 Bezel
18 Lens
19 Stop tail lamp body
20 Bulb for stop tail lamp
21 Glass
22 Bezel
23 Number plate lamp
24 Bulb for number plate lamp
25 Glass
26 Rubber grommet
27 Rubber gasket

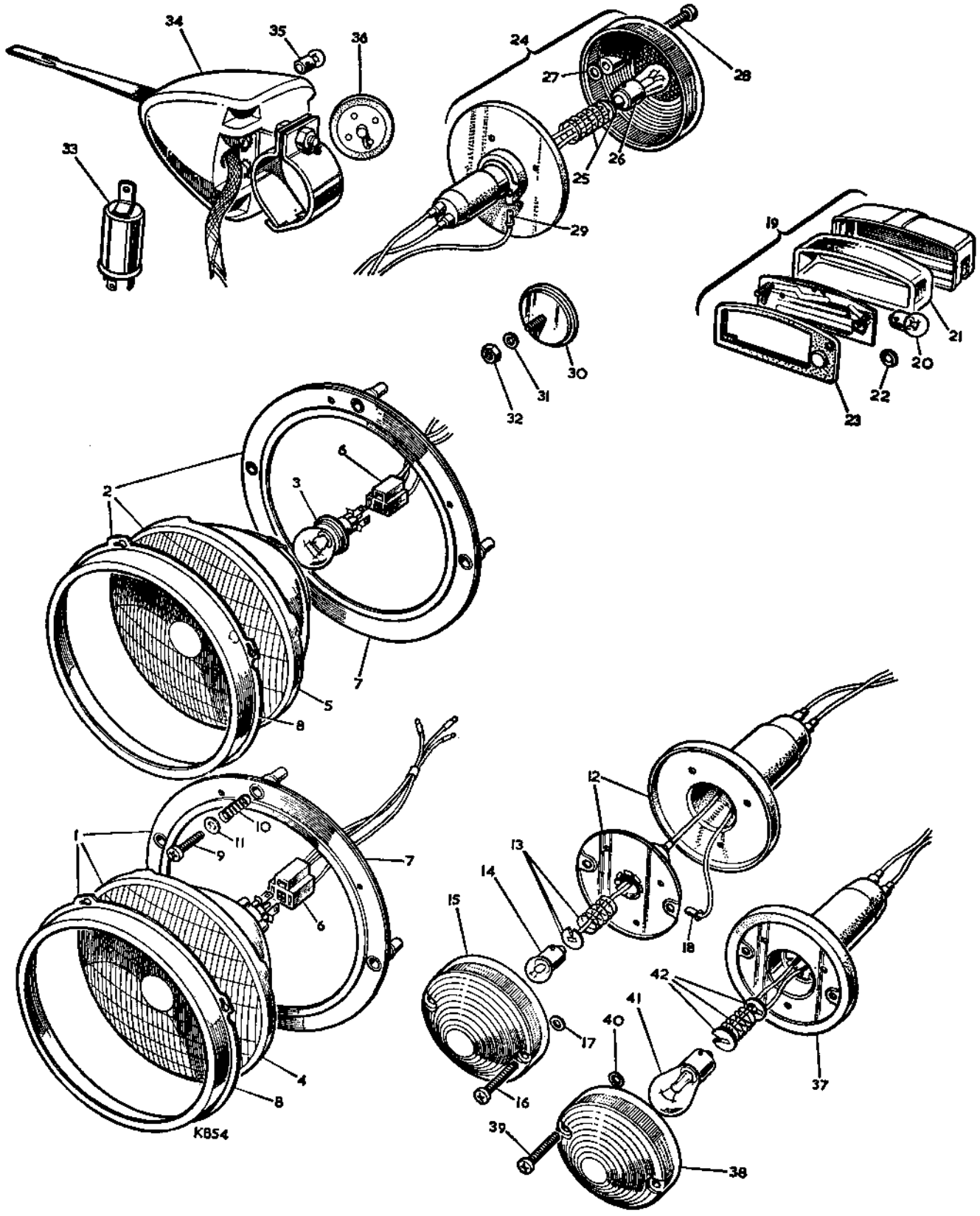


**Fig. N1-19 Layout of head, side, tail and flasher lamps. From vehicle suffix 'B' onwards (Except America dollar area)**

**Key to illustration of head, side, tail and flasher lamps. From vehicle suffix 'B' onwards (Except America dollar area)**

1 Headlamp complete, sealed beam
2 Headlamp complete
3 Bulb for headlamp
4 Light unit, sealed beam
5 Light unit
6 Adaptor and leads for headlamp
7 Rim for light unit
8 Rim for headlamp, chrome
9 Screw
10 Spring for screw
11 Fibre washer for screw
} For light unit adjustment and fitting headlamp to front grille
12 Side lamp complete
13 Bulb holder, interior
14 Bulb for side lamp
15 Lens for side lamp
16 Special screw, fixing lens
17 Washer for special screw
18 Sleeve for terminal
19 Number plate lamp
20 Bulb for number plate lamp
21 Lens
22 Rubber grommet for wire
23 Rubber gasket for lamp
24 Stop/tail lamp and rear number plate lamp
25 Bulb holder, interior
26 Bulb for lamp
27 Lens, stop/tail and reflex
28 Special screw, fixing lens
29 Sleeve for terminal
30 Red rear reflector
31 Spring washer
32 Nut (2 BA)
} Fixing reflectors
33 Flasher unit
34 Self-cancelling switch for flasher, Magnatex
35 Bulb for flasher switch, Magnatex
36 Wheel for flasher switch
37 Front and rear flasher lamp complete
38 Lens for flasher lamp
39 Special screw, fixing lens
40 Special washer fixing lens
41 Bulb for flasher lamp
42 Bulb holder, interior

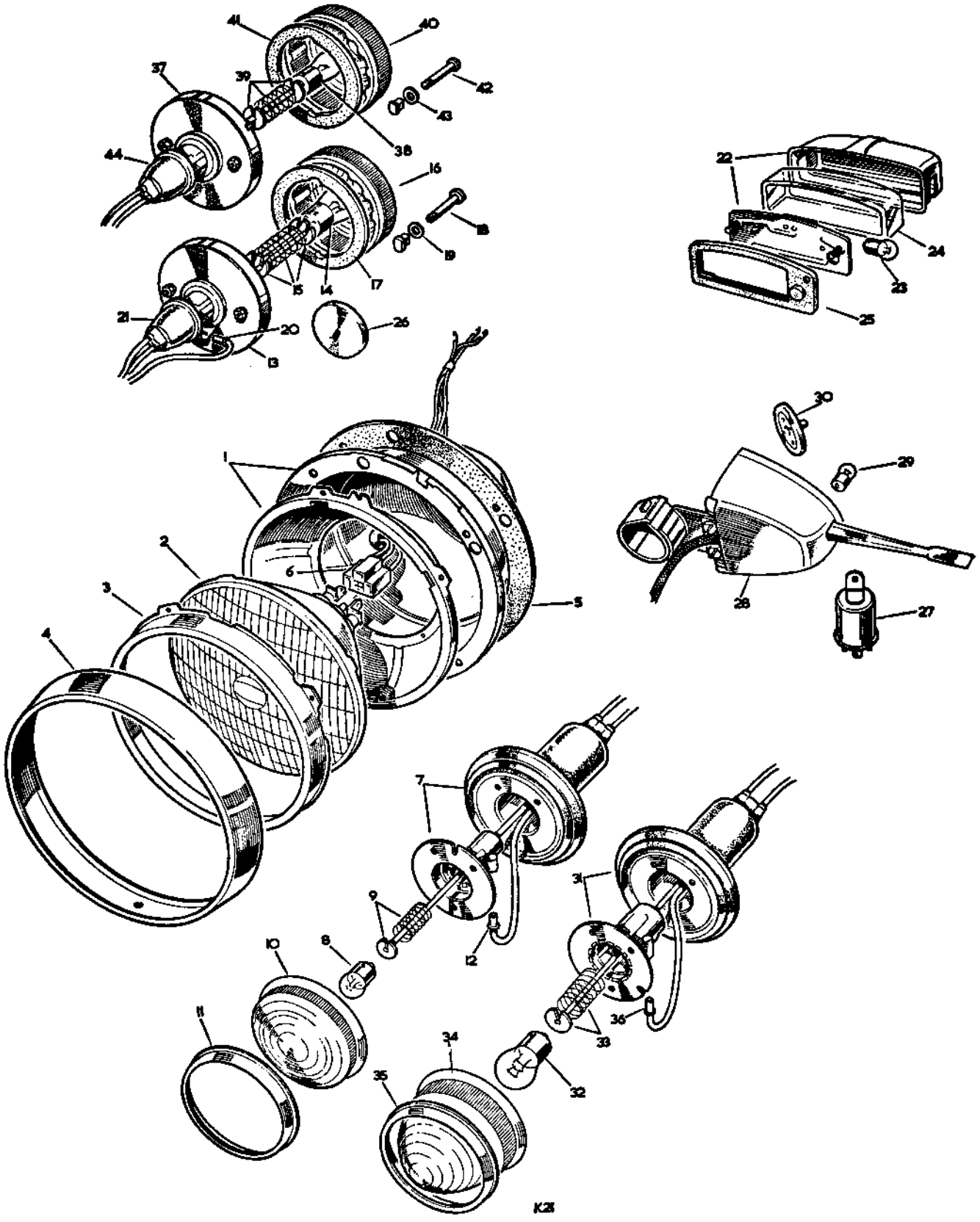


Fig. N1-20. Layout of head, side, tail and flasher lamps. (America dollar area)

**Key to illustration of head, side, tail and flasher lamps. (America dollar area)**

1 Headlamp assembly, sealed beam
2 Light unit for headlamp
3 Rim for light unit
4 Rim for headlamps
5 Gasket for headlamp
6 Adaptor and leads for light unit
7 Side lamp complete
8 Bulb for side lamp
9 Bulb holder, interior
10 Lens
11 Rim for lens
12 Sleeve for terminal
(9–12: For side lamp)
13 Stop/tail lamp complete
14 Bulb for stop/tail lamp
15 Bulb holder, interior
16 Lens
17 Gasket for lens
18 Special screw
19 Special washer
(18–19: Fixing lens)
20 Sleeve for terminal
21 Grommet for cable entry
(15–21: For stop/tail lamp)
22 Number plate lamp complete
23 Bulb for number plate lamp
24 Lens
25 Gasket for lens
(24–25: For number plate lamp)
26 Red rear reflector complete
27 Flasher unit
28 Self-cancelling switch for flasher, Magnatex
29 Bulb for flasher switch, Magnatex
30 Wheel for flasher switch
31 Front flasher lamp
32 Bulb for front flasher lamp
33 Bulb holder, interior
34 Lens for front flasher lamp
35 Chrome rim for lens
36 Sleeve for terminal
37 Rear flasher lamp complete
38 Bulb for rear flasher lamp
39 Bulb holder, interior
40 Lens for rear flasher lamp
41 Gasket for lens
42 Special screw
43 Special washer
(42–43: Fixing lens)
44 Grommet for cable entry

## Replacement bulbs and units

### Replacement headlamp bulbs and units—Up to vehicle suffix 'A' inclusive (Except America Dollar area)

Headlamps with bulbs:

| | |
|---|---|
| RHStg | LU 414, 12 v, 50/40 w |
| LHStg, except Europe | LU 415, 12 v, 50/40 w |
| LHStg, Europe except France (early type) | LU 370 |
| LHStg, Europe except France (later type) | LU 410, 12 v, 45/40 w |
| LHStg, France only | LU 411, 12 v, 45/40 w |

Headlamps with sealed beam units:

| | |
|---|---|
| RHStg | LU 553921 |
| LHStg, except Europe | LU 555447 |
| LHStg, Europe except France (early type) | LU 553940 |
| LHStg, Europe except France (later type) | LU 556452 |
| LHStg, France only | LU 553948 |

### Replacement headlamp bulbs and units—from vehicle suffix 'B' onwards (Except America Dollar area)

Headlamps with bulbs:

| | |
|---|---|
| LHStg, Europe except France | LU 410, 12 v, 45/40 w |
| LHStg, France only | LU 411, 12 v, 45/40 w |

Headlamps with sealed beam units:

| | |
|---|---|
| RHStg | LU 54521872 |
| LHStg, except Europe | LU 54522231 |
| LHStg, Europe except Austria | LU 54522683 |
| LHStg, Austria only | LU 54520883 |

### Replacement headlamp unit—America Dollar area

| | |
|---|---|
| LHStg | LU 54522231 |

### Replacement bulbs for general equipment—All models

| | |
|---|---|
| Sidelamps | LU 207, 12 v, 6 w |
| Stop, tail lamps | LU 380, 12 v, 21/6 w |
| Flasher lamps | LU 382, 12 v, 21 w |
| Flasher warning lamp | Magnatex GBP, 12 v, 2.2 w |
| Rear number plate lamp | LU 989, 12 v, 6 w |
| Instrument panel lights | LU 987, 12 v, 2.2 w MES |
| Warning lights | LU 987, 12 v, 2.2 w MES |
| Warning light, brakes, Forward Control models | LU 281, 12 v, 2 w |
| Warning light, heater plugs, Diesel models | LU 982, 6 v, 1.8 w, MES |
| Warning light, fuel level, Diesel models | Magnetex GBP, 12 v, 2.8 w. Rover Part No. 560756<br>Mini-Lamp, 12/14 v, .04 a |
| Interior light | LU 382, 12 v, 21 w |

## Headlamps, to remove, refit and adjust—Operation N1-2

Workshop hand tools:
Screwdriver (medium), Phillips screwdriver (medium)

### General

Vehicles which have the headlamps fitted in the radiator grille panel, the RH headlamp is accessible after lifting the bonnet, the LH headlamp is accessible through the radiator grille panel after removing the grille. Vehicles which have the headlamps fitted in the wings, both lamps are accessible after removing the headlamp panel from the wing.

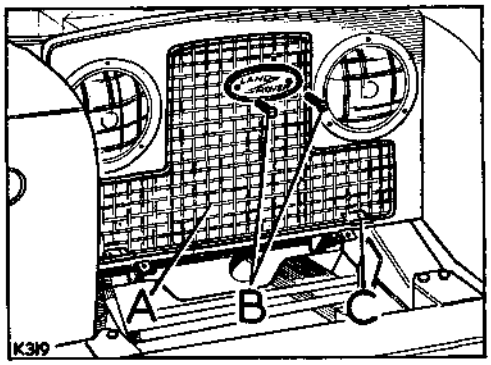


**Fig. N1-21. Radiator grille**

A—Radiator grille
B—Fixings for name plate and grille
C—Support brackets

### To replace bulb or light unit

### Headlamps mounted in grille panel:

1. RH headlamp—Lift the bonnet and prop open. Remove any equipment mounted above the headlamp which obstructs access.

   LH headlamp—Remove the name plate and withdraw the radiator grille.

2. Bulb type headlamps—Disconnect the snap connectors or plug from the rear of the headlamp and release spring clip. Remove bulb holder; the bulb can then be replaced and the unit assembled.

3. Sealed beam type headlamp—Disconnect snap connectors or plug at the rear and support unit. Unscrew the three Phillips recessed-head screws on grille panel, and lift out sealed beam unit.

4. Fit new sealed beam unit. Reassemble and tighten Phillips recessed-head screws fully.

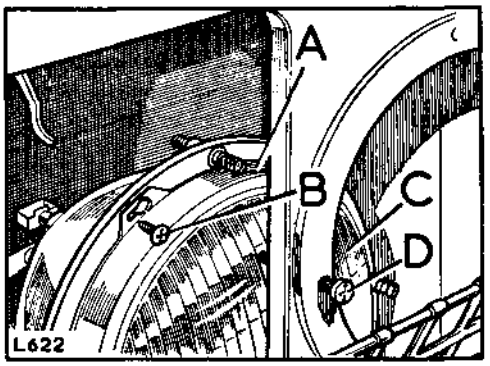


**Fig. N1-22. Headlamp light unit replacement**

A—Retaining rim
B—Retaining screw for rim
C—Light unit
D—Retaining screw for headlamp

### Headlamps mounted in front wings

5. Remove the fixings and withdraw the headlamp bezel from the front wing.

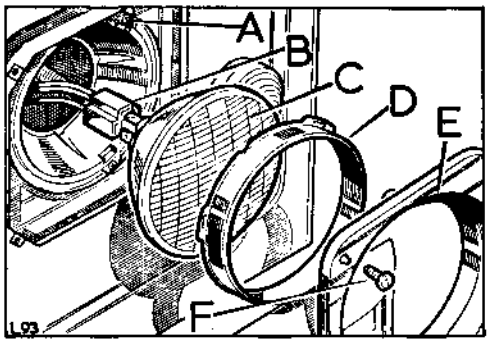


**Fig. N1-23. Headlamp light unit replacement**

A—Fixings for rim
B—Connector, electrical leads
C—Light unit
D—Rim for headlamp
E—Bezel
F—Fixings for bezel

6. Slacken the three Phillips head screws and turn the headlamp rim to release it from the keyhole slot locations.

## Operation N1-2—*continued*

7. Lift the headlamp from the wing and withdraw the rubber boot and plug from the rear. Release spring clip and remove bulb.
8. Replace the bulb, engaging its keyway, and re-assemble the unit aligning the cut-aways in the headlamp panel to give access to the beam adjusting screws.

### Headlamps to remove and refit

### Headlamps mounted in grille panel

1. RH headlamp—Lift the bonnet and prop open. Remove any equipment mounted above the headlamp which obstructs access.
   LH headlamp—Remove the nameplate and withdraw the radiator grille.

#### Early type headlamps

2. Disconnect the leads at the snap connectors and remove them from supporting clips.
3. Remove the securing screw from the lower side of rim and ease the rim off from the bottom.
4. Withdraw the dust-excluding rubber.

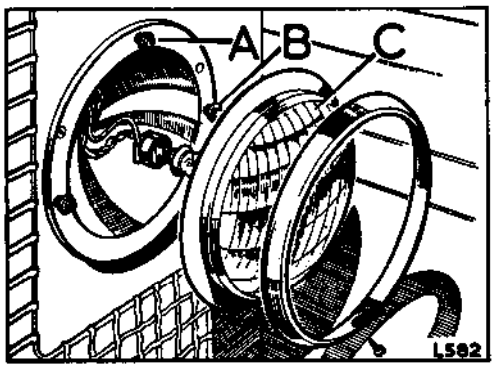


**Fig. N1-24. Headlamp, early type**

A—Vertical adjustment screw
B—Horizontal adjustment screw
C—Lens

5. Press the light unit against the compression springs of the adjusting screws and turn anti-clockwise to release.
6. Release the bulb contact housing. Remove the bulb if not sealed beam type.
7. Remove the securing screws and withdraw the lamp body complete with leads and rubber gasket.
8. Refit by reversing the removal procedure.

#### Later type headlamp

9. Disconnect the plug at the rear of the headlamp.
10. Support the headlamp and remove the three Phillips head screws from the grille panel, and lift out the headlamp complete.
11. Refit by reversing the removal procedure.

### Headlamps mounted in front wings

12. Remove the fixings and withdraw the headlamp bezel from the front wing.
13. Slacken the three Phillips head screws and turn the headlamp rim to release it from the keyhole slot locations.
14. Lift the headlamp from the wing, withdraw the rubber boot and plug from the rear and lift the headlamp clear.
15. If required remove the headlamp setting screws, detach the tensioning spring and withdraw the rear shell. Remove the fixings and withdraw the headlamp mounting flange and gasket.
16. Refit by reversing the removal procedure.

### Headlamp, to adjust

Lamps must be set to comply with local lighting regulations.

Accurate and rapid checking of lamp settings is most easily effected using a beam setter. When such facilities are not available, the lamps can be set by marking off a smooth wall or screen and shining the lamps on it from a distance of 25 ft (7,6 metres).

#### To adjust, using wall or screen marking

1. Position the vehicle unladen, on level ground 25 ft (7,6 metres) from the wall or screen.
2. Mark the wall or screen as illustrated, the horizontal and vertical centre lines must be accurately measured from the vehicle concerned. The markings can be duplicated for setting both headlamps.

## Operation N1-2—*continued*

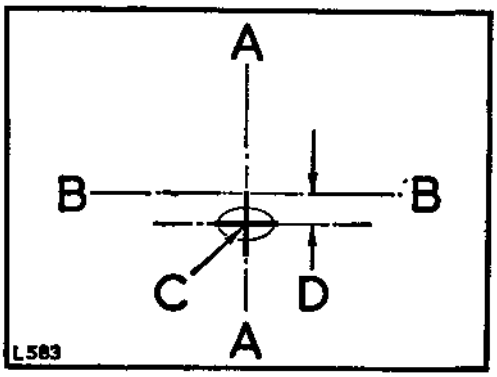


**Fig. N1-25. Wall or screen marking for setting headlamp main beam**

AA—Vertical centre line of headlamp
BB—Horizontal centre line of headlamp measured from level floor
C—Centre of concentrated area of light
D—2 in. ± 1 in. (50 mm ± 25 mm)

3. Ensure that the centre line of the vehicle is at right-angles to the wall or screen and that the marked centre lines are in the same planes as the headlamp centre lines.
4. Adjust the beam by turning the adjusting screws (see Fig. N1-24 for grille mounted headlamps. The adjustment screws on wing mounted headlamps are accessible through slots in the headlamp bezel) until the area of concentrated light corresponds with the mark on the wall or screen.

## Side lamp, to remove and refit—Operation N1-3

Workshop hand tools:
Screwdriver (small), Screwdriver (Phillips)

**To remove** (Figs. N1-18, N1-19 and N1-20)

1. Disconnect the leads at the snap connectors, alongside the radiator cowl.
2. Withdraw the rim and lens by removing the securing screws.
3. If required, remove the bulb.
4. Remove the lamp from the wing, by removing the retaining screws, spring washers and nuts.

**To refit**

1. Reverse the removal procedure, connecting the wiring in accordance with the circuit diagram.
2. Latest type side lamps—Use a small screwdriver to locate the lamp lens into the rubber retainer.

## Stop and tail lamp, remove and refit—Operation N1-4

Workshop hand tools:
Screwdriver (small), Screwdriver (Phillips)

**To remove** (Figs. N1-18, N1-19 and N1-20)

1. Disconnect the tail lamp harness at the snap connectors located beneath the wheel box, adjacent to the chassis frame side member.
2. Remove the screws, washers and nuts, and withdraw the rear lamp cover plate (inside vehicle).
3. Withdraw the tail lamp harness through the rubber grommet in the wheel box.
4. Withdraw the rim and glass by removing the securing screws. If required, remove the bulb.
5. Remove the lamp and harness complete by removing the securing screws.

**To refit**

1. Reverse the removal procedure, connecting the harness in accordance with the circuit diagram.
2. Latest type stop and tail lamps—Use a small screwdriver to locate the lamp lens into the rubber retainer.

## Flasher lamp, to remove and refit—Operation N1-5

Workshop hand tools:

Screwdriver (small), Screwdriver (Phillips)

**To remove** (Figs. N1-19 and N1-20)

1. Disconnect the leads at the snap connectors alongside the radiator cowl, for the front flasher lamps. Disconnect the leads at the snap connectors located beneath the wheel box adjacent to the chassis side member, for the rear flasher lamps.
2. Remove the fixings screws and withdraw the lens from the rubber retainer.
3. If required, remove the bulb.
4. Remove the lamps from the front wing, by removing the retaining screws, spring washers and nuts.
5. Remove the screws, washers and nuts and withdraw the rear lamp cover plate (inside vehicle).
6. Withdraw the leads—through the wheel box grommet.
7. Remove the lamps from the tail, by removing the retaining drive screws.

**To refit**

1. Reverse the removal procedure, connecting the wiring in accordance with the appropriate circuit diagram. Use a small screwdriver to locate the lamp lens into the rubber retainer.

## Rear number plate illumination lamp, to remove and refit—Operation N1-6

Workshop hand tools:

Spanner size: 2 BA
Screwdriver (medium)

**Note:** For vehicles which have the number plate lamp incorporated with the stop and tail lamp, refer to the instructions covering the stop and tail lamp.

**To remove** (Figs. N1-18, N1-19 and N1-20)

1. Disconnect the leads at the snap connectors located beneath the wheel box, adjacent to the chassis frame side member.
2. Remove the screws, washers and nuts and withdraw the rear lamp cover plate (inside vehicle).
3. Withdraw the leads—through the wheel box grommet.
4. Remove the securing screw and withdraw lamp cover. If required, remove the bulb.
5. Withdraw the lamp by removing the securing nuts (inside vehicle).

**To refit**

1. Reverse removal procedure, connecting the wiring in accordance with the circuit diagram.

## Stop lamp, to remove and refit—Operation N1-7

Workshop hand tools:
Spanner size: $\frac{7}{16}$ in. AF
Screwdriver (medium)

### Hydraulic operated type

**To renew**

The hydraulic switch is located on the brake pipe five-way piece, at the front RH chassis side member.

1. Disconnect the leads, unscrew switch and remove.
2. Replace by reversing the removal procedure, connecting wires in accordance with the wiring diagram. Minimise loss of brake fluid by fitting new switch immediately.
3. Bleed the brake system. Section H.

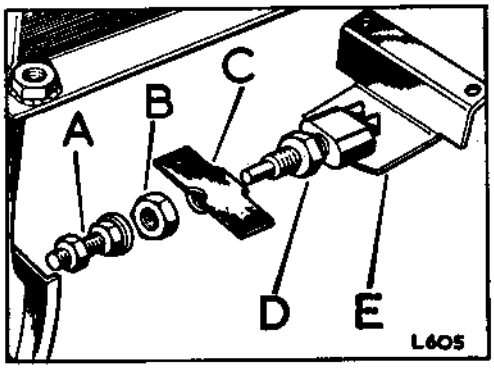


**Fig. N1-26. Mechanical stop lamp switch**

A—Stop adjuster for pedal
B—End stop
C—Mounting bracket for switch
D—Stop lamp switch
E—Protection plate for switch

### Mechanically operated type

**To renew**

1. Remove the switch protection plate from the brake pedal bracket.
2. Disconnect the electrical leads from the switch.
3. Depress the brake pedal and remove the end stop from the switch and withdraw the switch from the mounting bracket.
4. Replace by reversing the removal procedure, connecting wire in accordance with the appropriate circuit diagram.
5. If required, set the brake pedal adjuster to give a dimension of $6\frac{1}{4}$ in. (158 mm) between the lower edge of the pedal foot pad and the floor. See Section H, Operation H1-4.

### Mechanically operated switch used with Girling mechanical servo

**To renew**

1. Disconnect the leads from the stop lamp switch.
2. Release the locknut and unscrew the switch from the brake pedal bracket.
3. Replace by reversing the removal procedure, connecting the leads in accordance with the appropriate circuit diagram.
4. Check, and if necessary, adjust the stop lamp switch to operate at $\frac{3}{4}$ in. to 1 in. (19 mm to 25 mm) of pedal movement.

## Engine starter switches, remove and refit—Operation N1-8

Workshop hand tools:
Screwdrivers (small and medium)

### General

When removing switches, prior to disconnecting the leads record their colours and relative positions to facilitate refitting.

### Petrol models

**Early type starter switch** (see Section P for ignition switch details)

#### To remove

1. Disconnect the battery.
2. Disconnect the three leads from the switch.
3. Screw off the switch knob and the locking nut from the switch spindle.
4. Remove the switch from the dash panel.

#### To refit

Reverse the removal procedure, connecting the wires in accordance with the appropriate circuit diagram.

### Latest type combined starter and ignition switch

#### To remove

1. Disconnect the battery.
2. Remove the screws securing the instrument panel, and draw the panel forward.
3. Disconnect the leads from the starter and ignition switch.
4. Unscrew the chrome locking ring and withdraw the switch.

#### To refit

Reverse the removal procedure, connecting the leads in accordance with the appropriate circuit diagram. Adjust the locknut so that switch fits flush when secured with locking ring.

### Mixture control thermostat switch, Petrol engines

#### To renew

1. Disconnect the wire from the thermostat switch.
2. Remove the switch from the cylinder head.
3. Check the switch: Contact is made at 51–54°C (124–129°F); contact is broken at 47–53°C (117–127°F).
4. Fit the new switch by reversing the removal procedure.
   Renewal of the second switch in the mixture control warning light circuit (at the manual-control) is dealt with in Section P.

### Diesel models

### Starter and heater plug switch, early type

#### To remove

1. Disconnect the positive lead from the right-hand battery.
2. Disconnect the leads from the back of the starter switch.
3. Remove the large securing nut from facia side of panel.
4. Withdraw switch.

#### To refit

1. Reverse removal procedure, connecting leads in accordance with the appropriate circuit diagram.

### Starter and heater plug switch, latest type

#### To remove

1. Disconnect the battery.
2. Remove the screws securing the instrument panel, and draw the panel forward.
3. Disconnect the leads from the starter and heater plug switch.
4. Via the small hole in the body of the switch, depress the barrel lock plunger and remove the barrel.
5. Unscrew the chrome locking ring and withdraw the switch from the rear of the panel.

#### To refit

Reverse the removal procedure, reconnecting the leads in accordance with the appropriate circuit diagram. Adjust the locknut so that switch fits flush when secured with locking ring.

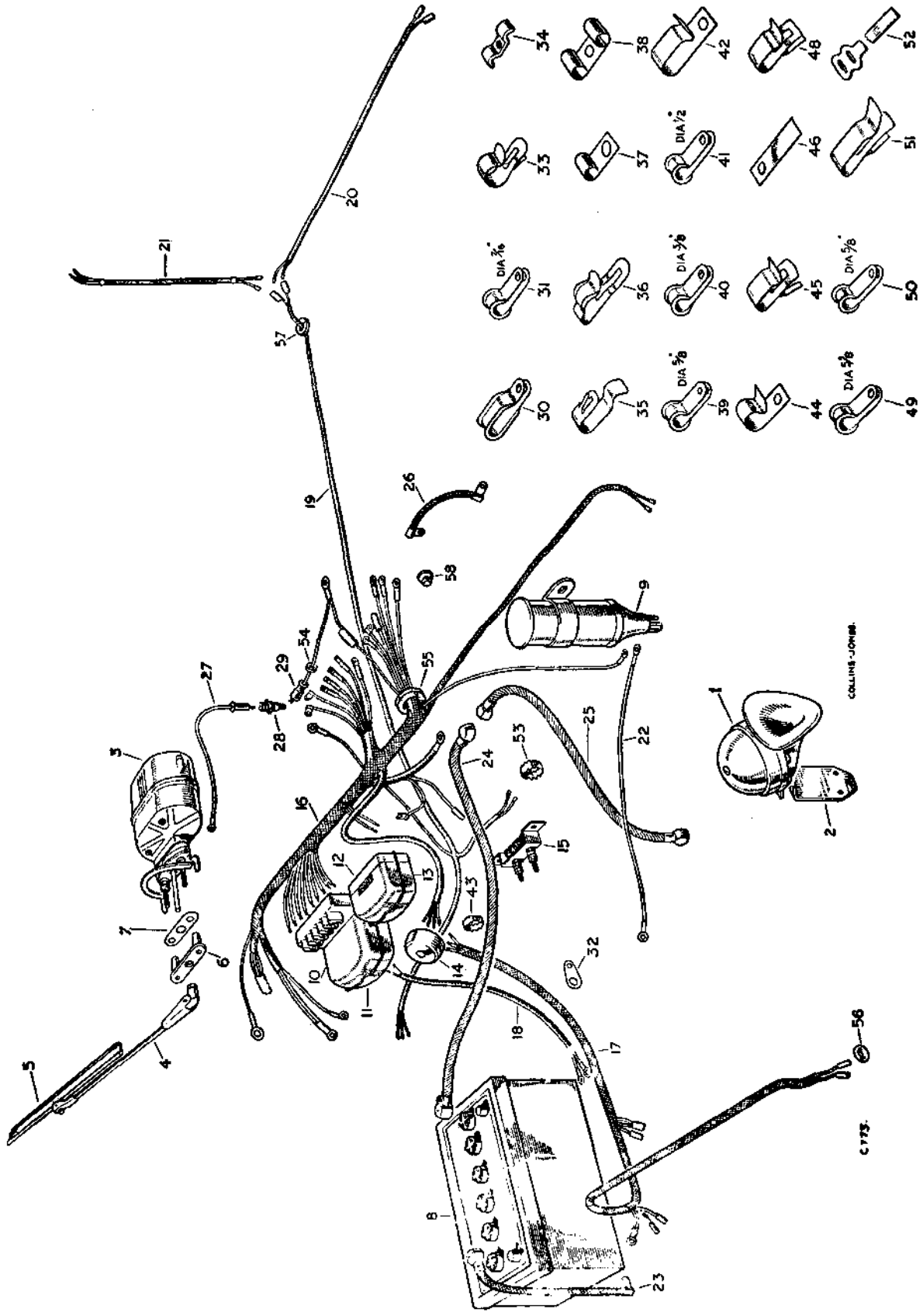


**Fig. N1-27. Layout of general electrical equipment, positive earth system. Series II and IIA models Up to vehicle suffix 'C' inclusive.**

**Key to illustration of general electrical equipment, positive earth system. Series II and IIA models. Up to vehicle suffix 'C' inclusive**

1 Windtone horn
2 Mounting bracket for windtone horn
3 Windscreen wiper motor complete
4 Arm for wiper blade, stud fixing
5 Wiper blade, stud fixing
6 Escutcheon for windscreen wiper motor
7 Rubber seal for escutcheon
8 Battery, dry, 12 volt
10 Voltage regulator box
11 Cover for regulator box
12 Fuse box
13 Cover for fuse box
14 Junction box
15 Resistor for heater plugs
16 Dash harness
17 Headlamp and sidelamp harness
18 Dynamo harness
19 Frame harness
20 Rear crossmember harness
21 Lead, rear number plate lamp
22 Cable, coil to distributor
23 Cable, battery to earth
24 Cable, battery to switch
25 Cable, switch to starter
26 Cable, gearbox to earth
27 Wiper feed lead
28 Plug socket for leads on steering bracket
29 Cap for wiper feed socket
30 Clip for dynamo harness
31 Clip for battery to switch cable
32 Mounting plate for cable clips
33 Cable clip for frame harness, at dash RH
35 Cable clip for frame harness, at junction box
36 Cable clip at LH headlamp
37 Earthing clip for headlamp
38 Earthing clip on rear crossmember
39 Cable clip, fixing harness to dash, RH
40 Cable clip, fixing harness to dash and LH toe box
41 Cable clip on wing valance and toe box
42 Cable clip, fixing harness to RH toe box
43 Cable clip, fixing harness adjacent to junction box
44 Cable clip, fixing dipper and horn leads to RH
45 Clip for rear crossmember harness
48 Cable clip, wiper feed lead
49 Cable clip on fan cowl top baffle
50 Clip, fixing heater switch lead to engine speed control quadrant
51 Cable clip at dash, RH
52 Bowden clip, starter cable to solenoid
53 Cable cleat for engine harness
54 Rubber grommet in dash for wiper motor lead
55 Rubber grommet, main harness, in dash
56 Rubber grommet for side lamp lead
57 Rubber grommet for frame harness
58 Rubber plug for redundant hole
59 Rubber cover for battery terminal

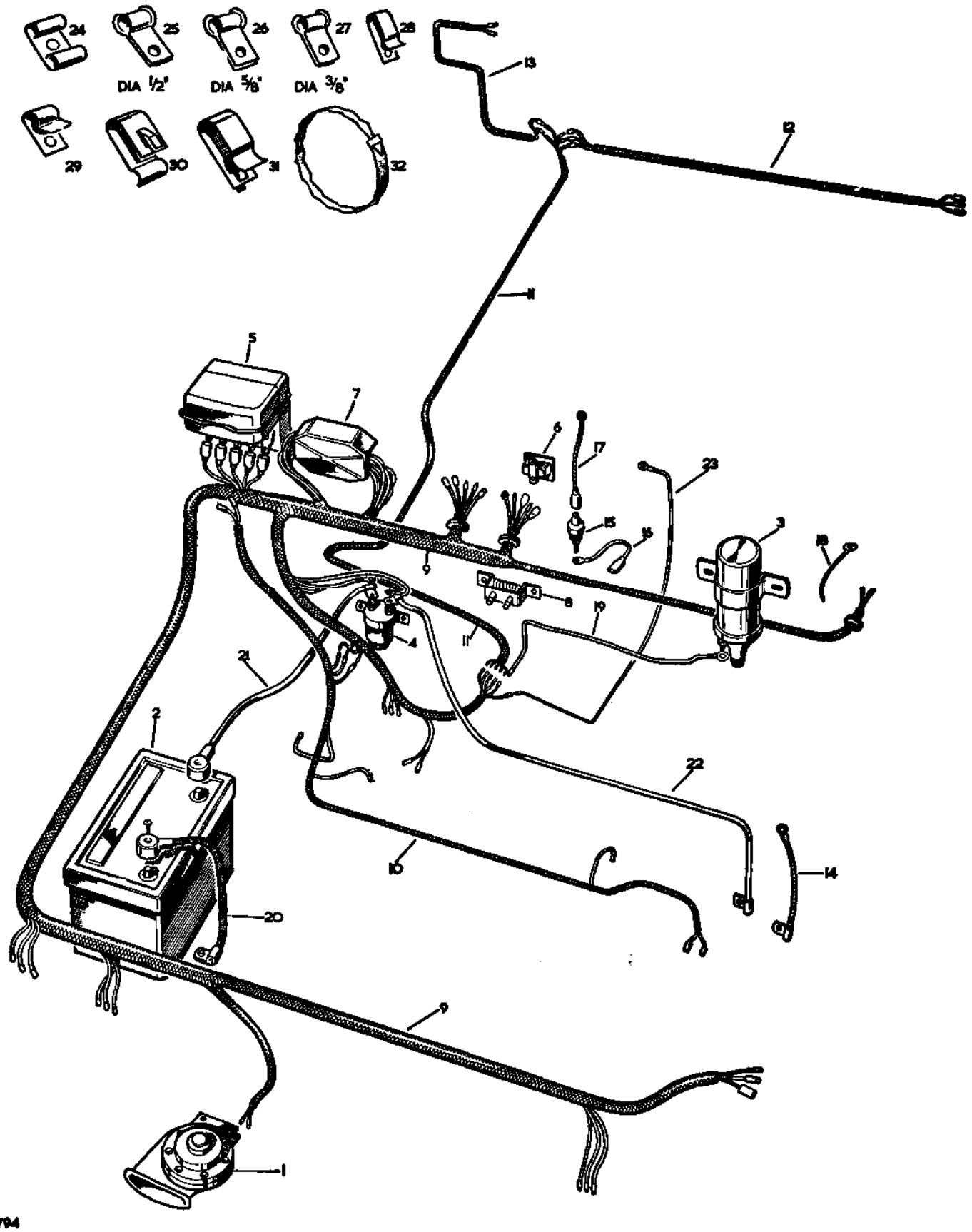


**Fig. N1-28. Layout of general electrical equipment, negative earth system. Series IIA 4 cylinder models. From vehicle suffix 'D' onwards**

**Key to Illustration of general electrical equipment, negative earth system. Series IIA 4 cylinder models. From vehicle suffix 'D' onwards**

1 Windtone horn, Clearhooter
2 Battery, dry, 12 volt
3 Ignition coil
4 Starter solenoid switch
5 Voltage regulator box
6 Voltage regulator for instruments, 10 volt
7 Fuse box
8 Resistor for heater plugs, KLG
9 Dash harness
10 Dynamo harness
11 Frame harness
12 Rear crossmember harness
13 Lead for rear number plate lamp
14 Lead, starter motor to earth
15 Inhibitor socket for wiper motor leads
16 Lead, wiper switch to inhibitor socket
17 Lead, inhibitor socket to windscreen
18 Lead, wiper motor to earth
19 Cable, coil to distributor, low tension
20 Cable, battery to earth
21 Cable, battery to solenoid switch
22 Cable, solenoid switch to starter
23 Lead for fuel tank unit

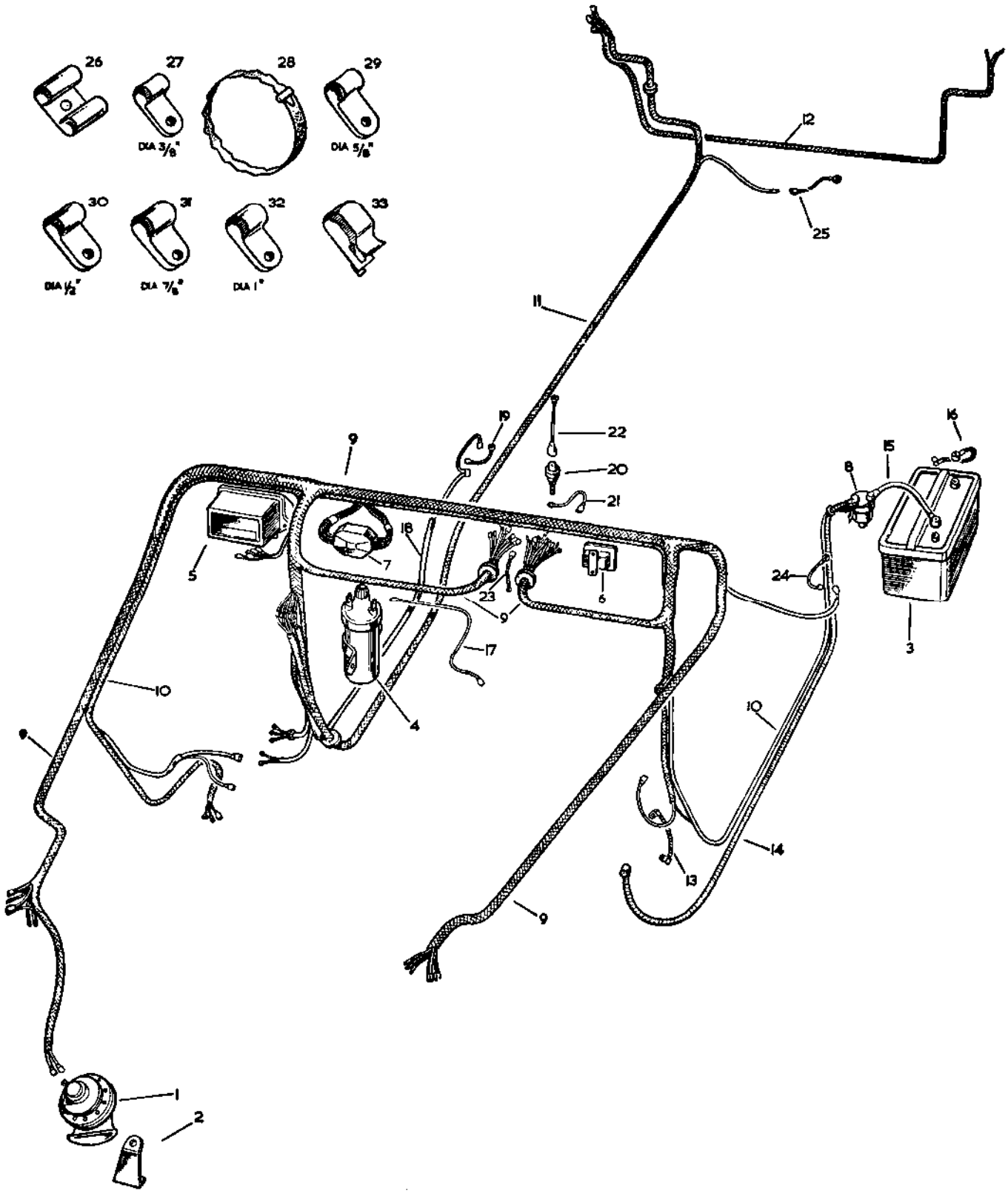


H945

**Fig. N1-29. Layout of general electrical equipment, negative earth system. 2.6 litre Petrol, 6 cylinder models**

**Key to illustration of general electrical equipment, negative earth system. 2.6 litre Petrol, 6 cylinder models**

1 Windtone horn, complete with bracket
3 Battery, dry, 12 volt
4 Ignition coil
5 Current voltage control box
6 Voltage regulator for instruments
7 Fuse box
8 Starter solenoid switch
9 Dash harness
10 Dynamo harness
11 Frame harness
12 Rear crossmember harness
13 Lead, starter motor to earth
14 Cable, solenoid to starter motor
15 Cable, battery to starter solenoid
16 Cable, battery to earth, negative
17 Cable, coil to distributor, low tension
18 Cable, fuel pump feed
19 Lead, fuel pump to earth
20 Inhibitor socket for wiper motor leads
21 Lead, wiper switch to inhibitor socket
22 Lead, inhibitor socket to windscreen
23 Lead, wiper switch to earth
24 Earth lead for wiper motor
25 Earth lead for fuel tank gauge

## Dipswitch for headlamp, to remove and refit—Operation N1-9

Workshop hand tools:
Screwdriver (medium)

### To remove

1. Disconnect the dipswitch leads at junction box or snap connectors as applicable.
2. Remove the securing screws and withdraw the switch from toe board.

### To refit

1. Reverse removal procedure, connecting leads in accordance with the circuit diagram.

## Flasher switch, to remove and refit—Operation N1-10

Workshop hand tools:
Screwdriver (small and medium)

### To remove

1. Remove the five screws securing the instrument panel to the dash, and ease the panel forward.
2. Disconnect the flasher switch leads from the flasher unit and main harness at the rear of the instrument panel.
3. Withdraw the flasher switch leads through the grommet in the side of the instrument box, and release retaining clips at the dash and steering column.
4. Remove the flasher switch and support bracket from the steering column, and withdraw the switch complete with leads.

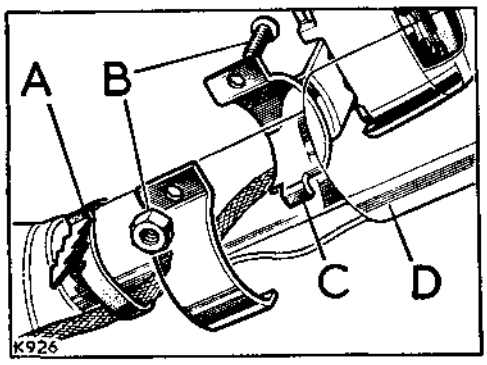


**Fig. N1-30. Flasher switch**

A—Clip, leads to steering column
B—Fixings for flasher switch
C—Flasher switch
D—Steering column

### To replace a bulb or wheel in flasher switch

5. Remove the three screws securing the flasher switch cover.
6. Withdraw the bulb from its bayonet fixing.
7. Lift the control lever from the flasher switch.
8. Withdraw the wheel from the pivot shaft.
9. Reassemble by reversing the removal procedure.

### To refit flasher switch

1. Reverse the removal procedure, connecting the flasher switch leads in accordance with the appropriate circuit diagram.

## Flasher unit, to remove and refit—Operation N1-11

Workshop hand tools:
Screwdriver (medium)

### To remove

1. Remove the five screws securing the instrument panel to the dash, and ease the panel forward.
2. Remove the screw securing the flasher unit, withdraw the leads and lift the flasher unit clear.

### To refit

1. Reverse the removal procedure, connecting the leads in accordance with the appropriate circuit diagram.

## Ignition coil, to remove and refit—Operation N1-12

Workshop hand tools:
Spanner size: $\frac{7}{16}$ in. AF open end
Screwdriver (medium)

### To remove

1. With the ignition switched off, disconnect the high and low tension leads from the coil.
2. $2\frac{1}{4}$ litre models—Remove the drive screws and shakeproof washers securing the coil to the dash panel, and withdraw coil.
3. 2.6 litre models—Remove the bolts, nuts, plain and spring washers securing the coil to the engine, and withdraw the coil.

### To refit

1. Reverse the removal procedure.

## Distributor, to overhaul—Operation N1-13

*(For removal and refitting instructions, Section A refers)*

Workshop hand tools:
Spanner size: 4 BA
Screwdriver (medium), Screwdriver (Phillips), Mallet (hide face), Pliers, Feeler gauges

### General

The distributors fitted to the 2¼ litre four cylinder engine and the 2.6 litre six cylinder engine, are of the same basic type, with only minor differences such as the cam and distributor cap. The following instructions apply to both four cylinder and six cylinder type distributors.

### To dismantle

1. Remove distributor cap and withdraw the rotor arm.
2. Remove the nut, star and plain washer retaining the contact spring and lift off the insulating bush, together with the low tension and capacitor leads.

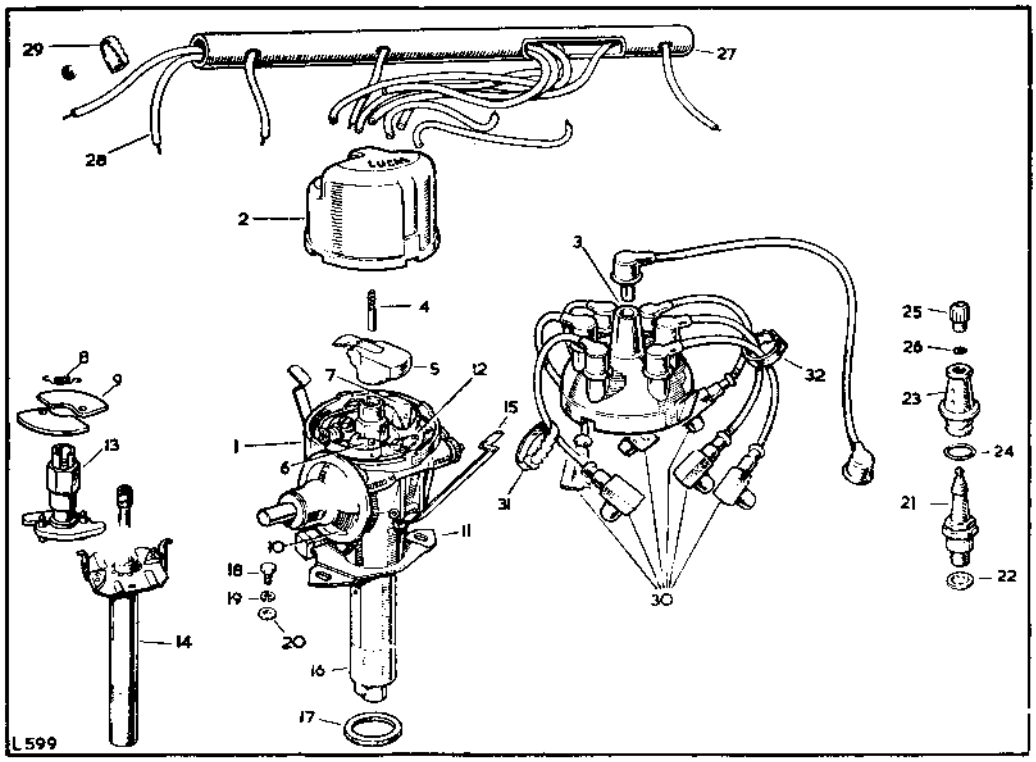


**Fig. N1-31. Layout of distributor (6 cylinder version illustrated)**

1 Distributor body
2 Distributor cap, early type
3 Distributor cap, latest type
4 Brush and spring for cap
5 Rotor arm
6 Contact points
7 Condenser
8 Auto advance spring, set
9 Auto advance weight
10 Vacuum unit
11 Clamping plate
12 Base plate for contact breaker
13 Cam
14 Shaft and action plate
15 Clip for cover
16 Driving dog
17 Cork washer for distributor housing
18 Set bolt (¼ in. UNF x $\frac{5}{16}$ in. long) } Fixing
19 Spring washer } distributor to
20 Plain washer } cylinder block
21 Sparking plug
22 Washer for plug
23 Cover for sparking plug
24 Rubber sealing ring for plug cover
25 Cable nut
26 Washer for cable nut
27 Ignition wire carrier
28 Sparking plug lead set
29 Cable cleat securing No. 1 plug lead and coil leads

## Operation N1-13—*continued*

3. Lift off the moving contact point and the insulating washers from the contact pivot and the spring post.
4. Remove the terminal block from its slot in the distributor body.
5. Remove the set screw, spring and plain washers retaining the fixed contact plate and lift off the fixed contact.
6. Remove the Phillips screw and star washer retaining the capacitor, and lift off the capacitor.
7. Disconnect the spring connecting the vacuum unit to the base plate and withdraw the vacuum unit.
8. Remove the circlip from the micrometer adjusting nut.
9. Remove the ratchet spring plate from the side of the adjusting nut, remove the adjusting nut and coil spring and withdraw the vacuum unit.
10. Remove the two Phillips screws and spring washers securing the base plate to the distributor body and lift off the base plate.
11. Rotate the contact breaker moving plate clockwise to its full extent and withdraw from base plate.
12. Carefully withdraw the two springs from the centrifugal advance unit.
13. Remove the screw from inside the cam and lift off the cam and cam foot, noting the position of the rotor arm slot in relation to the distributor driving dog for assembly purposes.
14. Lift off two weights.
15. Drive out the pin securing the driving dog and remove the dog and brass washer.
16. Remove the action plate and shaft, noting the position and condition of the distance collar beneath the action plate.
17. Remove clamping plate.
18. Using a shouldered mandrel, press out the bush from the body end.
19. Check all parts for wear or damage, and replace as necessary.

    *The bearing bush is of sintered copper-iron and must be completely immersed in engine oil for at least 24 hours prior to fitting.*

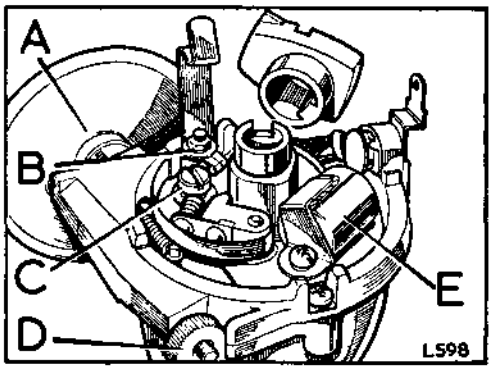


**Fig. N1-32. Distributor details**

A—Micrometer graduated scale
B—Terminal screw
C—Contact adjustment screw
D—Micrometer adjusting nut
E—Capacitor

### Distributor, rebuild

1. Reassemble the distributor by reversing the dismantling instructions.
2. Using the hole in the distributor shank as a guide, drill the bush on one side and remove the frazing.
3. Ensure that the drive shaft rotates freely in the bush.
4. When fitting the centrifugal governor springs, care must be taken not to stretch them.
5. When fully assembled, adjust the contact points to .014 in. to .016 in. (0,35 mm to 0,40 mm).

For ignition timing and distributor adjustment instructions, refer to Section A.

## Heater plugs, Diesel models, to remove, refit and check—Operation N1-14

Workshop hand tools:
Spanner sizes: 2 BA

### General

The heater plugs do not require any maintenance. However, if at any time when the heater plugs are in use, the warning light glows very brightly, a short circuit in the system is indicated. No light will indicate an open circuit.

Great care must be taken not to twist the centre terminal when removing heater plug leads.

### Fault location on heater plug circuit, plugs in situ

1. Examine the fuse in the fuse box and fit a new replacement if necessary. Refer to the applicable circuit diagram for fuse location.
2. Failure of the warning light bulb will not affect the heater plug circuit, but the bulb should be replaced when conveniently possible. Section P.

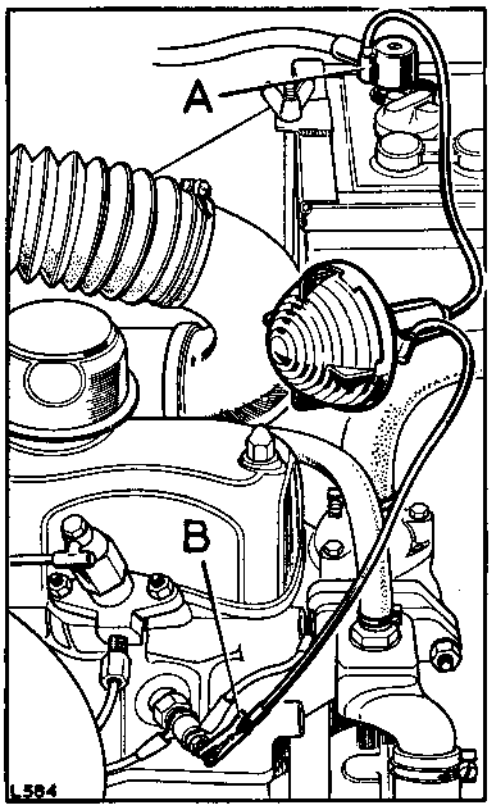


**Fig. N1-33. Checking heater plug circuit**

A—Battery feed terminal (see text)
B—Earth lead terminal on No. 1 plug

3. Connect one lead of a 12 volt test lamp to the earth lead terminal on No. 1 heater plug and the other lead to the positive terminal of the under bonnet battery on negative earth vehicles and the negative terminal on positive earth vehicles.
4. If the test lamp does not light, a faulty earth lead is indicated.
5. Move the test lamp lead from the heater plug earth lead terminal to the interconnecting lead terminal. If the test lamp remains unlighted, a broken heater plug filament is indicated.
6. Check the remaining plugs in the same manner until the fault is located.
7. If the plugs are proved serviceable, check each terminal of the resistance in the same manner. If the resistance and the output lead are proved to be serviceable, check the input lead and starter switch itself.

### Heater plugs, to remove

The shape of the heater plug element and its position in relation to the plug body is important and care must therefore be taken when fitting, removing or cleaning the plug, to avoid distortion or damage to the element.

1. Disconnect the leads from the plugs, avoiding distortion of the central rod. On early heater plugs, use two spanners at each terminal to prevent the central rod or insulating tube twisting.
2. Remove carbon from base of heater plug to avoid possible short circuiting of the element. Do **not** sandblast.
3. Examine the element for signs of fracture or severe heat attack and the seating for scores. Plugs with fractured elements must be replaced. Where scoring of the seating is sufficient to allow gas leakage or erosion of the element such that a fracture is likely to occur, then a replacement plug must be fitted.

### Testing heater plugs when removed from engine

4. Test the plug internal circuit for continuity, by connecting it **and** a 12 volt side lamp bulb in circuit, to a 12 volt battery.

   The inclusion of a bulb in circuit is **essential.**

   If the bulb does not light an open circuit is indicated and the heater plug should be replaced with new.

## Operation N1-14—*continued*

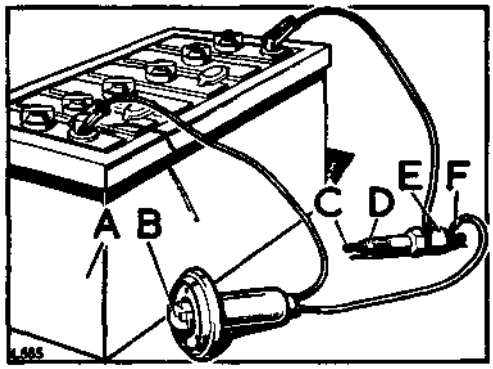


**Fig. N1-34. Testing heater plug circuit**

| | |
|---|---|
| A—12 volt battery | D—Seating |
| B—Bulb (12 v) | E—Insulation |
| C—Element | F—Terminal nuts |

### Heater plugs, to refit

5. Ensure that the terminal nuts and threads are clean and that the thread at base of plug is free of carbon.
6. Early type heater plugs—Ensure that shakeproof washers are fitted under the terminal in order to maintain good electrical contact.
7. Refit the heater plugs and tighten to 25 lb/ft (3,4 mkg).

   Replace the leads in accordance with the circuit diagram and tighten the terminals. On early type heater plugs, use two spanners at each terminal.

### Resistance, heater plugs

#### To remove

1. Disconnect the leads from resistance.
2. Remove the securing screws and withdraw the unit.

#### To refit

1. Reverse the removal procedure.

## Fuse and junction boxes, to remove and refit—Operation N1-15

Workshop hand tools:
Screwdriver (medium)

### Fuses

The fuses are located on the bulkhead under the bonnet. To replace a fuse:

1. The cover should be pulled off.
2. Replace fuse as required:

| Fuse number | Fuse protects | Fuse, Amps |
|---|---|---|
| A3–A4 | Windscreen wiper, fuel tank level unit and stop lights .. | 35 |
| A1–A2 | Interior lamps, fog lamps, etc., as applicable .. .. .. | 35 |

Two spare fuses are carried in the fuse box; only 35 amp cartridge type fuses should be used as replacements.

### To remove fuse or junction box

1. Disconnect the battery earth lead.
2. Remove the cover from the fuse or junction box, as applicable.
3. Disconnect the leads.
4. Remove the securing screws and withdraw the unit.

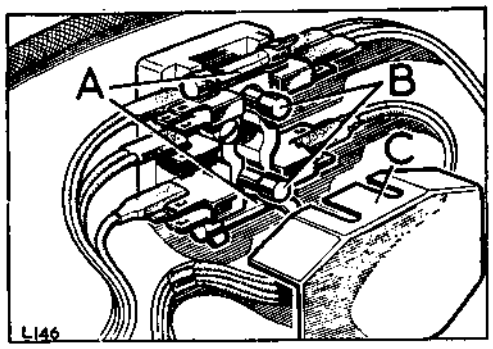


**Fig. N1-35. Fuse box**

A—Fuses B—Spare fuse

### To refit

Reverse the removal procedure, connecting the leads in accordance with the appropriate circuit diagram.

## Current voltage regulator, to remove, refit and adjust—Operation N1-16

Workshop hand tools:
Spanner sizes: 2 BA, 4 BA open end and socket
Screwdriver (medium), Feeler gauge

Special tools:
Lucas setting tool No. 54381742 (for RB340 regulator)
Voltmeter, moving coil 0–20 volts
Ammeter 40–0–40 amps

### General

There are three types of dynamo and current voltage regulators fitted to Petrol engine models, and two types fitted to Diesel engines, as follows:

**Series II 2¼ litre Petrol models**

Dynamo type C39 used with current voltage regulator RB106/37182.

**Series IIA 2¼ litre Petrol models**

Dynamo type C40 used with current voltage regulator RB106/37290.

**Series IIA 2.6 litre Petrol models**

Dynamo type C42 used with current voltage regulator RB340/37517.

**Series II and IIA 2¼ litre Diesel models up to vehicle suffix 'C' inclusive**

Dynamo type C40 used with current voltage regulator RB310/37472.

**Series IIA 2¼ litre Diesel models from vehicle suffix 'D' onwards**

Dynamo type C40 used with current voltage regulator RB340/37387.

It is important that the appropriate dynamos and current voltage regulators are used together as detailed above, otherwise there is a danger of burning out the dynamos.

### To remove

1. Disconnect the battery earth lead.
2. Disconnect all wires from the control box.
3. Remove the control box complete.

### To refit

1. Reverse the removal procedure, connecting the wiring in accordance with the appropriate circuit diagram.

### To check and adjust

### A. Current voltage regulator, type RB106

### Locating faults on charging circuit

Ensure that the dynamo is functioning correctly and that the batteries are in order, then proceed as follows:

1. Ensure that the wiring between battery and control box is in order by disconnecting the wire from control box terminal 'B' and connecting the end of the wire removed to the negative terminal of a voltmeter. Connect the positive voltmeter terminal to an earthing point on the chassis. If a voltmeter reading is observed, the wiring is in order and the control box must be examined.

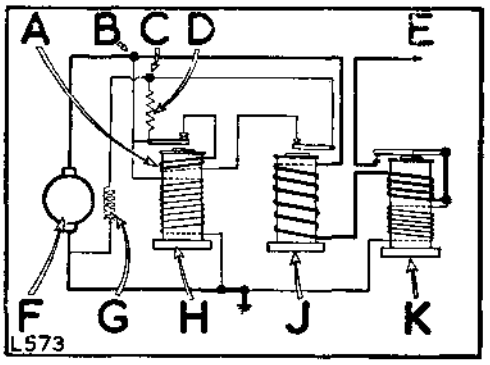


**Fig. N1-36. The charging circuit**

A—Bucking coil
B—Terminal on control box
C—Terminal on control box
D—Resistor
E—Terminal on control box—to ammeter and battery
F—Armature
G—Field windings
H—Voltage regulator
J—Current regulator
K—Cut-out relay

2. If there is no reading, examine the wiring between battery and control box for defective cables or loose connections.
3. Reconnect the wire to terminal 'B'.

### To check

4. Place a piece of paper between the cut-out contacts and connect a moving-coil voltmeter to the 'D' terminal on the regulator and to a good

## Operation N1-16—*continued*

earth (not the one on the regulator box). Start the engine and increase rpm until the voltage remains constant, i.e. the regulator is controlling; the voltmeter reading should be 15.8 to 16.4 volts. If the regulating voltage is not correct, the vehicle should be examined by a qualified electrician. Should the regulator be reading correctly at the commencement of this test, the earth lead of the voltmeter should be transferred to the 'E' connection on the regulator box; the reading should be the same as that obtained with the previous earth. If there is any difference, i.e. the 'E' connection on the regulator gives a lower reading, it will indicate a bad earth on the regulator box.

### Regulator adjustments

The regulators are carefully set during manufacture to suit the normal requirements of standard equipment and, in general, further adjustments should not be necessary. However, if the battery does not keep in a charged condition, or if the dynamo output does not fall when the battery is fully charged, it may be advisable to check the settings and readjust if necessary.

Before disturbing any settings, it is important to check that a fault in the charging system is not due to a slipping dynamo belt or to a defective battery.

### Electrical setting of voltage regulator

5. Disconnect control box terminal 'B'. Connect a first-grade moving-coil 0–20 voltmeter between terminal 'D' and earth.

6. Slowly increase the speed of the engine until the voltmeter needle flicks and steadies. This should occur at a reading between 14.2 and 14.8 volts. If it does not, stop the engine and remove the control box cover.

7. Slacken the adjustment screw locking nut (see illustration) and turn the screw in a clockwise direction to raise the voltage setting, or anti-clockwise to lower the setting. Turn the screw a fraction of a turn only at a time and retighten the locknut.

   Repeat this open-circuit voltage test until the correct setting is obtained.

   Remake the original connections.

   When the dynamo is run at a high speed on open circuit, it builds up a high voltage. Therefore, when adjusting the regulator, do not run the engine up to more than half throttle or a false voltmeter reading will be obtained. The adjustment should be completed within 30 seconds, otherwise heating of the regulator winding may cause an inaccurate setting to be made.

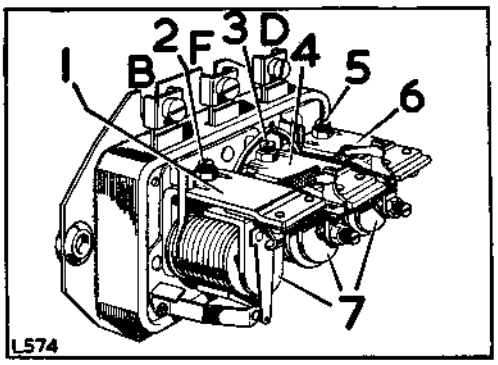


**Fig. N1-37. Current voltage regulator**

1—Cut-out
2—Cut-out adjusting screw
3—Current adjusting screw
4—Current regulator
5—Voltage adjusting screw
6—Voltage regulator
7—Armature
B—Terminal
F—Terminal
D—Terminal

### Electrical setting of current regulator on vehicle

9. When setting the current regulator on the vehicle, the dynamo must be made to develop its maximum rated output, whatever the state of charge of the battery might be at the time of setting. The voltage regulator must therefore be rendered inoperative. To do this, the voltage regulator contacts should be short-circuited with a clip large enough to bridge the outer armature assembly securing screw and the insulated fixed contact bracket, as shown in Fig. N1-38.

10. Disconnect the cable from control box terminal 'B' and connect a first-grade moving-coil 0–40 ammeter between this cable and terminal 'B'. Switch on all lamps and accessories. This will prevent the voltage of the system rising when the engine is started.

## Operation N1-16—*continued*

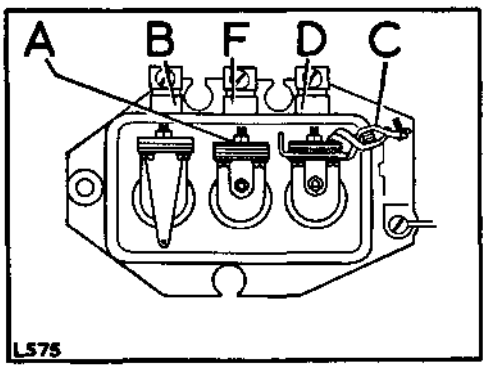


**Fig. N1-38. Short-circuiting voltage regulator contacts**

A—Current regulator adjusting screw
B—Terminal
C—Clip, short-circuiting
D—Terminal
F—Terminal

11. With the dynamo running at approximately 3,000 rpm, the ammeter needle should be steady and indicate a current of 19 amp with a type C39 dynamo, 22 amp with a type C40 dynamo or 30 amp with a type C42 dynamo. If it does not, the unit must be adjusted in a manner similar to that described for the voltage regulator.

    Re-make the original connections.

### Electrical setting of cut-out relay

12. Connect a first-grade moving-coil 0–20 voltmeter between control box terminal 'D' and earth, Switch on the headlamps and slowly increase the engine speed from zero. Closure of the contacts, indicated by a slight drop in the voltmeter reading, should occur between 12.7 and 13.3 volts. If it does not, the unit must be adjusted in a manner similar to that described for the voltage regulator.

    When setting the cut-in voltage at a test bench, a suitable load resistor passing about 6 amperes should be connected between control box terminal 'B' and earth. This will cause the voltmeter needle to flicker at the instant of contact closure.

13. Disconnect the cable from control box terminal 'B'. Connect a first-grade moving-coil 0–20 voltmeter between this terminal and earth. Run the engine up to speed and then slowly decelerate, noting the instant when the voltmeter reading drops to zero. This should occur between 9.5 and 10.5 volts. If it does not, adjust by carefully bowing the legs of the fixed contact post. Repeat the test and, if necessary, readjust until the armature releases at the voltage specified.

### Cleaning contacts

When cleaning the voltage or current regulator contacts, use fine carborundum stone or silicon carbide paper, followed by methylated spirits (denatured alcohol).

When cleaning the cut-out contacts, use a strip of fine glass paper—never carborundum stone or emery cloth.

### Mechanical setting of air gaps, voltage and current regulators

All air-gap settings are accurately adjusted before the units leave the factory, and should require no further attention. If, however, an armature is removed for any reason, care must be taken to obtain the correct air-gap settings on reassembly.

14. Slacken the two armature assembly securing screws so that the armature is loosely attached to the regulator frame.

15. Slacken the fixed contact locking nut and unscrew the fixed contact adjustment screw until it is well clear of the armature moving contact.

16. Slacken the voltage (or current) adjustment screw locking nut and unscrew the adjustment screw until it is well clear of the armature tension spring.

17. Using a 0.015 in. thick flat steel gauge, wide enough to cover completely the core face, insert the gauge between the underside of the armature and the copper disc. Take care not to turn up or damage the edge of this disc.

18. Press the armature squarely down against the gauge and retighten the two armature assembly securing screws.

19. With the gauge still in position, screw in the fixed contact adjustment screw until it just touches the armature moving contact. Retighten the locking nut.

20. Carry out the electrical settings, items 5 to 11, as applicable.

## Operation N1-16—*continued*

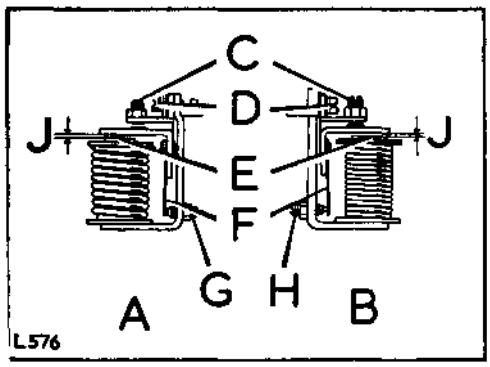


**Fig. N1-39. Voltage and current regulators**

A—Voltage regulator
B—Current regulator
C—Fixed contact adjustment screws
D—Armature assembly securing screws
E—Cores
F—Armature tension springs
G—Voltage adjustment screws
H—Current adjustment screws
J—.015 in. (0,40 mm)

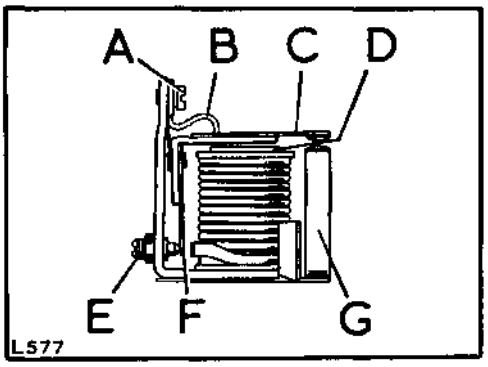


**Fig. N1-40. Cut-out relay**

A—Armature assembly securing screw
B—Armature back stop
C—Contact blade
D—Core
E—Adjustment screw
F—Armature tension spring
G—Fixed contact post

### Setting cut-out relay air-gap

21. Slacken the two armature assembly securing screws so that the armature is loosely attached to the cut-out frame.
22. Slacken the adjustment screw locking nut and unscrew the adjustment screw until it is well clear of the armature tension spring.
23. Press the armature squarely down against the copper-sprayed core face and retighten the two armature assembly securing screws. No gauge is necessary.
24. Press the armature down against the core face and adjust the armature back stop so that a .018 in. (0,5 mm) gap is obtained between the tip of the back stop and the contact blade.
25. Insert a .010 in. (0,25 mm) thick flat steel gauge between the underside of the armature and the copper-sprayed core face. The gauge should be inserted from the side of the core nearest the fixed contact post. The leading edge of the gauge shou'd not be inserted beyond the centre line of the core face. Press the armature down against the gauge and check the cut-out contacts. These should be just touching. If necessary, adjust the height of the fixed contact by carefully bowing the legs of the fixed contact post.
26. Reset the cut-in voltage, items 12 and 13, and lock the adjustment screw.

## B. Current voltage regulator, types RB310 and RB340

### Control box, adjust

1. Before disturbing any electrical adjustments examine the charging circuit as under to ensure that the fault does not lie outside the control box.
2. Check the battery by substitution or with a hydrometer or heavy discharge tester.
3. Inspect the dynamo driving belt; this should be tensioned to give $\frac{5}{16}$ in. to $\frac{7}{16}$ in. (8 mm to 11 mm) deflection by thumb pressure midway between the fan and crankshaft pulleys.
4. Check the dynamo by substitution or in accordance with Operation N1-22.
5. Inspect the wiring of the charging circuit and carry out continuity test between the dynamo, control box and when fitted, the ammeter.

## Operation N1-16—*continued*

6. Check earth connections, particularly that of the control box.
7. In the event of reported undercharging, ascertain that this is not due to low mileage.
8. Should the control box fail to respond correctly to any adjustment given in the following instructions, it should be exchanged for a factory reconditioned unit.

A special tool, Lucas Part No. 54381742 is required for adjustment of the RB340 control box electrical settings. Checking and adjusting should be completed as rapidly as possible to avoid heating errors.

### Voltage regulator, adjust

| Ambient Temperature | Voltage Setting RB310 | RB340 |
|---|---|---|
| 10°C (50°F) .. .. .. | 15.1–15.7 | 14.9–15.5 |
| 20°C (68°F) .. .. .. | 14.9–15.5 | 14.7–15.3 |
| 30°C (86°F) .. .. .. | 14.7–15.3 | 14.5–15.1 |
| 40°C (104°F) .. .. .. | 14.5–15.1 | 14.3–14.9 |

9. Disconnect all cables from control box terminal 'B' and tape ends in such a manner that they are still in contact with each other.
10. Connect a first-grade 0–20 moving-coil voltmeter between control box terminal 'D' and a good earthing point.
11. Start the engine and, while observing the voltmeter, gradually speed up to a dynamo speed of 3,000 rpm.
12. The voltmeter pointer should progressively rise to a maximum value, then 'flick' back to a slightly lower reading and remain steady. This is the regulating voltage and should be within the above limits.
13. An unsteady reading of more than ±0.3 volts may be due to unclean contacts. If the reading occurs outside the appropriate limits, an adjustment must be made. In this event, continue as follows:
14. Stop the engine and remove the control box cover.

### Early models with type C40 dynamo and RB310 regulator

15. Slacken the adjustment screw locking nut and turn the screw in a clockwise direction to raise the voltage setting, or anti-clockwise to lower the setting. Turn the screw a fraction of a turn only at a time and retighten locknut.

### Late models with type C42 dynamo and RB340 regulator

16. Insert the special tool in the voltage regulator and turn the cam a very small amount.

    Turning clockwise will increase the voltage setting, and vice-versa.
17. Restart the engine and check the setting, as detailed above.
18. When the dynamo is run at high speed on open circuit it builds up a high voltage. Do not run the engine up to more than half throttle or a false voltage reading will be given. Complete adjustments within 30 seconds as heating of the regulator winding may cause an inaccurate setting to be made.
19. Repeat this procedure as necessary, until the regulating voltage setting lies within the appropriate limits.

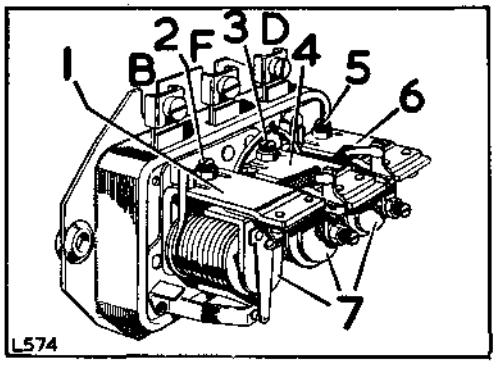


**Fig. N1-41. Current voltage regulator, type RB31**

1—Cut-out
2—Cut-out adjusting screw
3—Current adjusting screw
4—Current regulator
5—Voltage adjusting screw
6—Voltage regulator
7—Armature
B—Battery
D—Dynamo
F—Field

## Operation N1-16—*continued*

20. Dirty contacts should be cleaned with a fine carborundum stone or silicon carbide paper, followed by methylated spirits. If the contacts setting is disturbed, reset as detailed in Overhaul Instruction (air gap settings), then adjust the electrical settings.

21. When satisfactory, restore the original connections and refit the cover.

### Current regulator, adjust

22. The current regulator on-load setting is equal to the maximum rated output of the dynamo, which is:

    Type C40 dynamo—22 amps.

    Type C42 dynamo—30 amps.

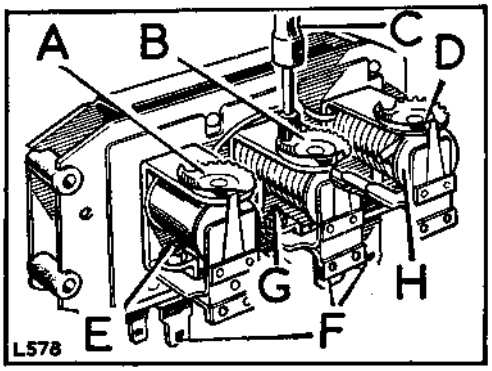


**Fig. N1-42. Current voltage regulator, type RB340**

A—Adjustment cam of voltage regulator
B—Adjustment cam of current regulator
C—Special setting tool
D—Adjustment cam of cut-out relay
E—Adjustable contact of voltage regulator
F—'Lucar' connection terminals
G—Adjustable contact of current regulator
H—Core face of cut-out relay

23. The dynamo must be made to develop its maximum rated output, whatever the state of charge of the battery might be at the time of setting. The voltage regulator must therefore be rendered inoperative and this is achieved by shorting-out the voltage regulator contacts.

24. Remove the control box cover with care.

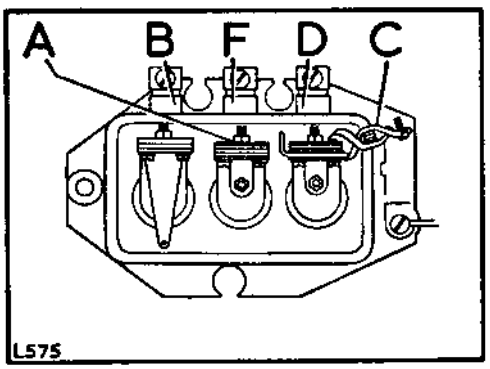


**Fig. N1-43. Short-circuiting voltage regulator contacts, type RB310 regulator illustrated**

A—Current regulator adjusting screw
B—Terminal
C—Clip, short-circuiting
D—Terminal
F—Terminal

25. Place a crocodile clip across the voltage regulator fixed contact bracket and the voltage regulator frame, to short-out the contacts.

26. Withdraw the leads from the 'B' terminal of the control box and use a 'jumper lead' to connect the two leads together and to the load side of a first-grade 0–40 moving-coil ammeter.

27. Connect the other side of the ammeter to the 'B' terminal of the control box. It is important that the terminal 'B' carries only the testing ammeter lead.

28. If the battery is well charged switch on an electrical load in excess of the maximum rated output of the dynamo. Start the engine and run the dynamo at 4,500 rpm. Observe ammeter which should be indicating a steady current equal to the maximum rated output of the dynamo.

29. The ammeter pointer should be steady. An unsteady reading (that is one fluctuating more than $\pm$ 1 ampere) may be due to unclean contacts which should be cleaned as described for the voltage regulator. If the reading is too high or too low, an adjustment must be made. In this event, continue as follows:

## Operation N1-16—*continued*

30. Stop the engine for each adjustment. Insert the special tool in the current regulator and turn the cam a very small amount.
    Clockwise rotation will increase the setting and vice-versa.
31. When the setting is satisfactory (i.e. within ± 1 ampere of the maximum output figure for the dynamo), switch off the load and restore the original connections.
32. Refit the control box cover with care.

### Cut-in voltage, adjust

Checking and adjusting should be completed as rapidly as possible to avoid heating errors.

Cut-in voltage: 12.7–13.3.

Drop-off voltage: 9.5–11.0.

33. Connect a first-grade 0–20 moving-coil voltmeter between control box terminal 'D' and a good earthing point.
34. Switch on an electrical load, such as the headlamps.
35. Start the engine and slowly increase the engine speed.
36. Observe the voltmeter pointer.
37. Closure of the contacts, indicated by a slight drop in the voltmeter reading, should occur between the limits 12.7–13.3 volts. If the cut-in occurs outside these limits, an adjustment must be made.
    In this event, continue as follows:
38. Reduce the engine speed below the cut-in value, and remove the control box cover.
39. Insert the special tool in the cut-out relay and turn the cam a small amount in the appropriate direction.
    Clockwise rotation will raise the setting and vice-versa.
40. Repeat the checking and setting procedure as necessary, until the correct setting is obtained.
41. Restore the original connections and refit the cover.

### Drop-off voltage, adjust

42. Disconnect the cables from control box at terminal 'B' and tape. Connect a first-grade 0–20 moving-coil voltmeter between this terminal and a good earth on the chassis.
43. Start the engine and increase engine speed gradually to approximately one-quarter throttle opening.
44. Slowly decelerate and observe the voltmeter pointer.
45. Opening of the contacts, indicated by the voltmeter pointer dropping to zero, should occur between 9.5–11.0 volts. If the drop-off occurs outside these limits, an adjustment must be made.
    In this event, continue as follows:
46. Stop the engine and remove the control box cover with care.
47. Adjust the drop-off voltage by carefully bending the fixed contact bracket. Reducing the contact gap will raise the drop-off voltage; increasing the gap will lower the drop-off voltage.
48. Repeat items 43 and 44 and, if necessary, readjust until the correct drop-off setting is obtained.
49. Restore the original connections and refit the control box cover with care.
50. To clean the cut-out relay contacts, use a strip of fine glass paper—never carborundum stone or emery cloth.

### Control box overhaul (type RB340)

### Air gap settings

All air gap settings are accurately adjusted during production and should require no further attention. However, if it has been found necessary to disturb the original setting it must be readjusted as follows, before the electrical settings can be carried out.

### Voltage and current regulators

51. To set the air gap between the bobbin and armature on the voltage and current regulators. Disconnect battery. Use the special tool and turn the adjustment cam to the point giving minimum lift to the armature tensioning spring (that is, fully anti-clockwise).
52. Slacken the adjustable contact locknut and screw back the adjustable contact.
53 Insert a 0.045 in. (1,000 mm) flat feeler gauge between the armature and the core face, taking care not to damage the copper shim. Push the gauge back to the two rivet heads on the under side of the armature.

## Operation N1-16—*continued*

The use of non-magnetic material in the top gap has been discontinued, as from December 1963. When servicing late type units use a feeler gauge of 0.052 in. to 0.056 in. (1,30 mm to 1,40 mm).

54. Screw in the adjustable contact until the gauge is just trapped, that is when it takes a pull of 4 to 5 oz to remove it. Retighten the locknut.

55. Check that narrowest part of back gap, between the armature back face and the frame, on both sides of the armature, is between the limits 0.030 in. to 0.040 in. (0,76 mm to 1,00 mm) with a maximum of 0.010 in. (0,25 mm) taper for current regulator units.

56. Electrical setting of the voltage regulator can now be carried out; leaving the current regulator unit until the cut-out has been adjusted both mechanically and electrically.

**Cut-out**

57. With the control box cover removed, turn the adjuster to the point giving maximum lift to the armature tensioning spring, that is by turning the adjuster to its fullest extent anti-clockwise.

58. Press the armature squarely down against the copper separation on the core face. Check that the narrowest part of the back gap, between the armature back face and the frame, on both sides of the armature, is from 0.030 in. to 0.040 in. (0,76 mm to 1,00 mm).

59. Insert a 0.015 in. (0,38 mm) flat feeler gauge between the head of the core and the armature using the nearest rivet as a datum. Press the armature down and bend the fixed contact bracket until the two contacts just touch, this is the preliminary setting for contact 'follow through'.

60. Insert a 0.015 in. (0,38 mm) feeler gauge between the head of the core and armature as above. Adjust the armature back stop until it just touches the back of the armature.

61. Check that the top gap, controlled by the back stop and using the nearest rivet as a datum, is from 0.035 in. to 0.045 in. (0,8 mm to 1,1 mm).

62. Proceed with the electrical settings for the cut-out, as detailed.

## Horn push, to remove and refit—Operation N1-17

Workshop hand tools:
Screwdriver (medium)

### To remove

**Bracket mounted type**

1. Remove the securing screws and withdraw the horn button and leads.
2. Disconnect the leads if necessary.

**Centre type**

3. Gently prise out the centre complete from the steering wheel. Disconnect the lead at the snap connector on the centre.
4. Remove the horn button from the centre if necessary.

### To refit

1. Reverse the removal procedure.

## Electric horn, remove, refit and adjust—Operation N1-18

Workshop hand tools:
Spanner sizes:

### Horn button

**To remove**

**Bracket mounted type**

1. Remove the securing screws and withdraw the horn button and leads.
2. Disconnect the leads if necessary.

**Centre type**

3. Gently prise out the centre complete from the steering wheel. Disconnect the lead at the snap connector on the centre.
4. Remove the horn button from the centre if necessary.

**To refit**

1. Reverse the removal procedure.

### Electric horn

**To remove** (Figs. N1-27, N1-28 and N1-29)

The electric horn is mounted behind the radiator grille panel and is accessible after lifting the bonnet, although on certain models, other equipment mounted above the horn must be removed.

1. Disconnect the leads at the snap connectors adjacent to the horn, then remove the securing bolts and withdraw the unit.

**To refit**

1. Reverse the removal procedure.

### Adjustment of horn

**Note:** Four types of electric horn are in use requiring three methods of adjustment, and care should be taken to refer to applicable instructions.

The horn is adjusted on initial assembly and should not require attention for some considerable time.

Ascertain that horn failure or faulty note is not due to some outside source, such as a discharged battery, loose connections or loose horn mounting, before carrying out any adjustment.

### Lucas type horn, to adjust

1. Remove the horn from the vehicle.
2. Remove the dome and dome securing clip, clean the points and adjust them until they are almost touching, then turn the adjusting screw **half** a turn to increase the gap.
3. If adjustment of the horn does not produce satisfactory results, the horn should be returned to the makers.

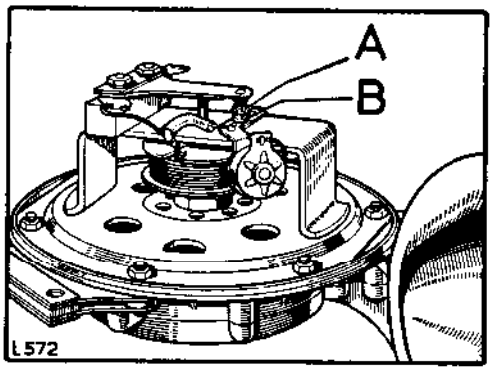


**Fig. N1-44. Horn adjustment. Lucas. Series II models**

A—Adjustable contact B—Locknut

### Clear Hooters horn (early type Series II models), to adjust

1. Remove the horn from the vehicle.
2. Remove the dome and dome clip.

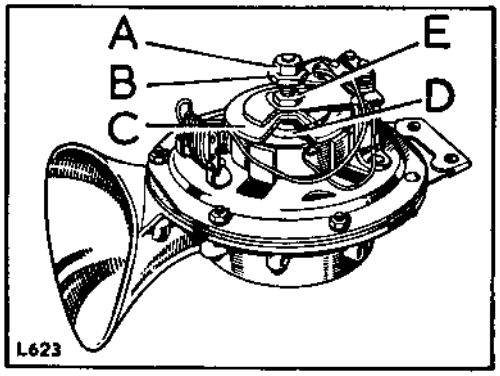


**Fig. N1-45. Horn adjustment. Clear Hooters. Series II models**

A—Locknut
B—Adjusting nut
C—Armature
D—Magnet core
E—Locknut, armature

## Operation N1-18—*continued*

3. Connect the horn leads to a 12 volt battery and adjust nut (A) until maximum volume is obtained, then lock in position with nut (B). See illustration.
4. Adjust the air gap between armature (C) and the magnet core face (D) to .045 to .050 in. (1,0 to 1,25 mm) by slackening nut (E) and turn the armature (C) clockwise or anti clockwise until the recommended distance is obtained, then tighten nut (E). The current consumption with horn correctly adjusted is 9 amperes.

**Clear Hooters horn (later type, Series IIA models), to adjust**

No routine adjustment of the horn is required. Should, however, the note be distorted, proceed as follows:

1. Remove the dome and turn the adjustment screw either clockwise or anti-clockwise.
2. Should this adjustment not produce satisfactory results, the horn should be returned to the manufacturer.

**Clear Hooters horn (latest type, Series IIA models), to adjust**

The latest type Clear Hooters horn is of all riveted construction and does not have a removable dome. Means of adjustment is provided externally by a special serrated screw adjacent to the cable terminals.

1. Remove the horn from the vehicle.
2. Connect the horn leads to a 12 volt battery and turn the serrated screw anti-clockwise until the horn just fails to sound, then turn it back for approximately one-quarter of a turn.
3. If the foregoing adjustment does not produce satisfactory results, a new replacement should be fitted.

## Windscreen wiper, to remove and refit—Operation N1-19

Workshop hand tools:
Spanner sizes: $\frac{7}{16}$ in. AF, $\frac{3}{4}$ in. AF
Screwdrivers (small and medium)

### Early type windscreen wiper, to remove

1. Slacken the wiper arm fixing nut and tap sharply to release the clamp collet, then remove the wiper arm and blade.
2. With the key in lamp switch turned 'off', disconnect the leads from wiper motor.
3. Remove the securing nuts, washers, grommets, wiper blade stop, rubber mounting block and brass bushes, then withdraw the motor.

### To refit

1. Reverse removal procedure, but do not lock the wiper arm blade until the sweep is correctly adjusted.

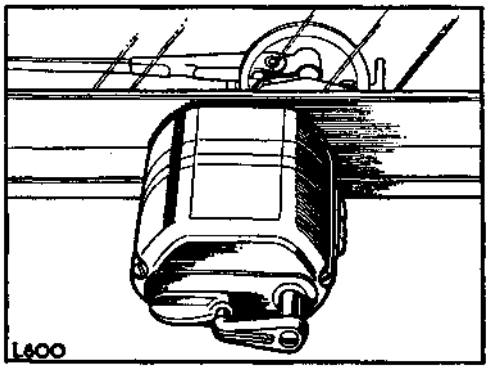


**Fig. N1-46. Early type windscreen wiper**

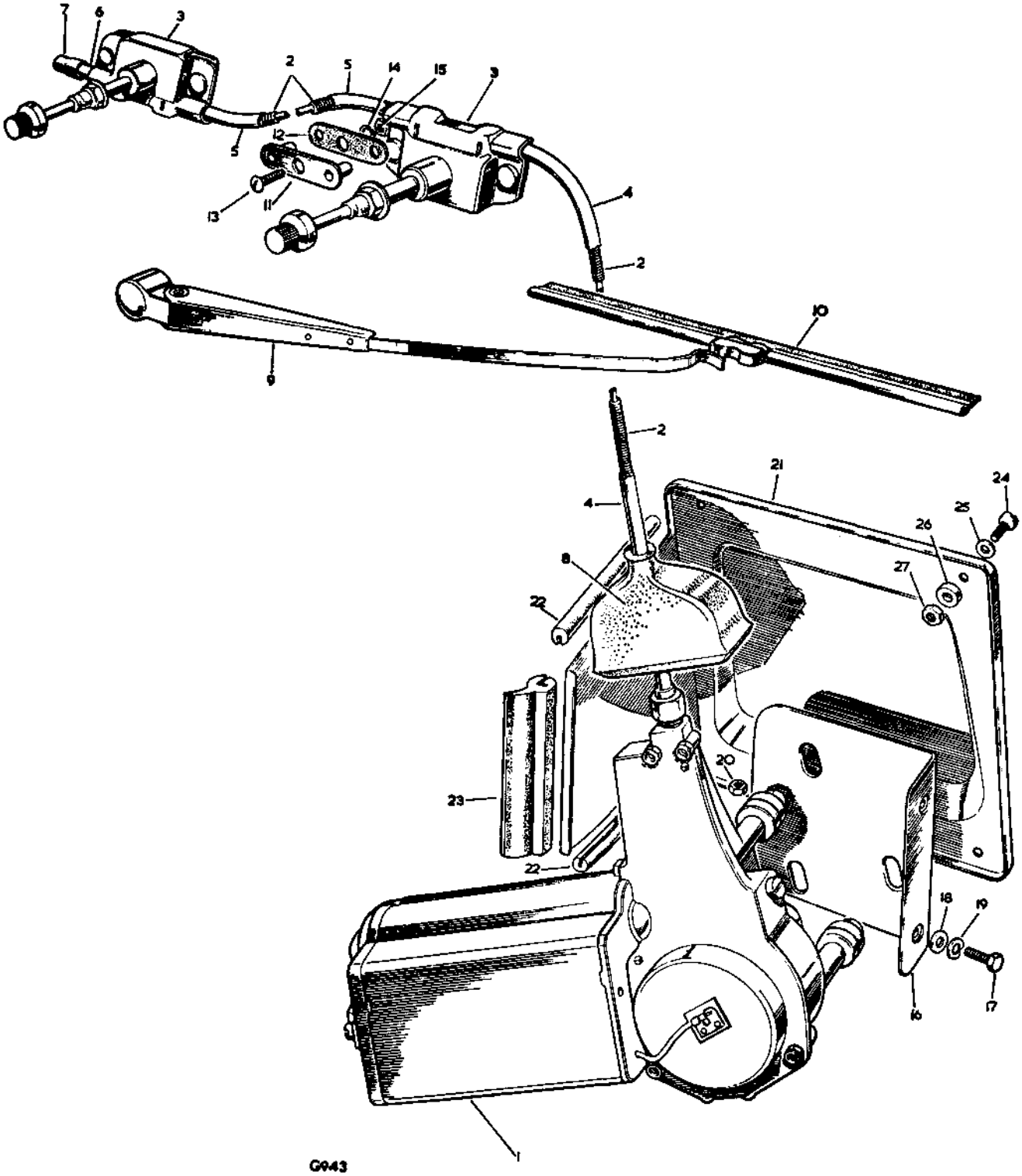


**Fig. N1-47. Layout of windscreen wiper (Early version of latest type)**

**Key to illustration of windscreen wiper (Early version of latest type)**

1 Windscreen wiper motor complete
2 Flexible drive cable
3 Wheelbox for wiper
4 Outer casing, motor to wheelbox
5 Outer casing, wheelbox to wheelbox
6 Outer casing, wheelbox end
7 Rubber cover for wiper motor in dash
8 Arm for wiper blade, RH
9 Arm for wiper blade, LH
10 Wiper blade
11 Escutcheon for windscreen wiper motor
12 Rubber seal for escutcheon
13 Screw (2 BA x 1⅛ in. long) } Fixing redundant escutcheon
14 Spring washer
15 Nut (2 BA)
16 Mounting bracket for wiper motor
17 Bolt (¼ in. UNF x ½ in. long) } Fixing mounting bracket to LH glove box
18 Plain washer
19 Spring washer
20 Nut (¼ in. UNF)
21 Cover plate for wiper motor
22 Rubber finisher } For cover plate
23 Rubber seal
24 Screw (2 BA x ½ in. long) } Fixing cover plate to LH glove box
25 Plain washer
26 Distance washer
27 Nut (2 BA)

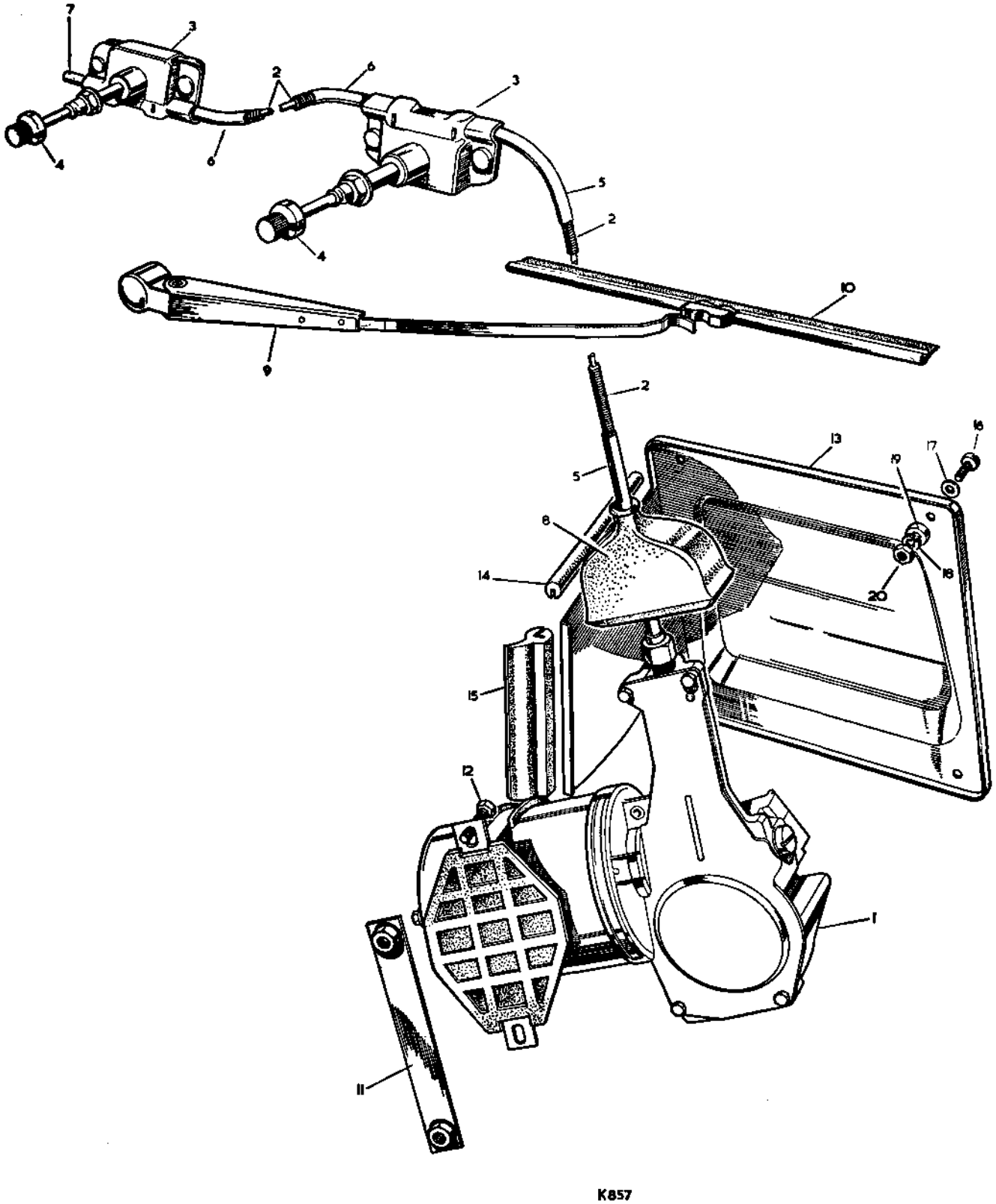


**Fig. N1-48. Layout of windscreen wiper (Latest version of latest type)**

**Key to illustration of windscreen wiper (Latest version of latest type).**

1 Windscreen wiper motor complete
2 Flexible drive cable
3 Wheelbox for wiper
4 Spindle and gear for wheelbox
5 Outer casing, motor to wheelbox
6 Outer casing, wheelbox to wheelbox
7 Outer casing, wheelbox end
8 Rubber cover for wiper motor in dash
9 Arm for wiper blade
10 Wiper blade
11 Nut plate for wiper motor
12 Set screw ($\frac{1}{4}$ in. UNF x $\frac{5}{8}$ in. long) fixing wiper motor to dash and nut plate
13 Cover plate for wiper motor
14 Rubber finisher } For cover plate
15 Rubber seal }
16 Screw (2 BA x $\frac{5}{8}$ in. long) } Fixing cover plate to LH glove box
17 Plain washer }
18 Spring washer }
19 Distance washer }
20 Nut (2 BA) }

## Operation N1-19—*continued*

**Latest type windscreen wiper (two versions in use)**

**Wiper motor, remove**

1. Disconnect battery.
2. Remove wiper blades.
3. Remove dash cover plate, secured by four drive screws.
4. Unscrew nut holding curved tube to wiper motor.

**Early version:**

5. Remove the four bolts attaching mounting plate to bottom and side of glove box and withdraw wiper motor complete with mounting plate and flexible drive.

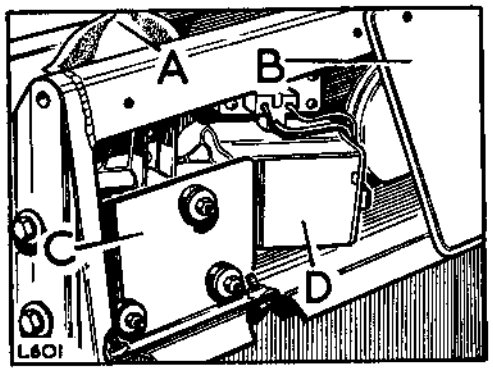


**Fig. N1-49. Location of wiper motor in glove box, early version illustrated**

A—Rubber cover for wiper
B—Cover for glove box aperture
C—Mounting bracket for wiper
D—Wiper motor

**Latest version:**

6. Remove the two bolts from the glove box and the nut plate from the engine compartment which secure the wiper motor to the dash panel. Withdraw the wiper motor complete with flexible drive.

**Wiper motor, refit**

1. Reverse removal procedure.

**Wheel box, remove (Latest type windscreen wipers only)**

1. Disconnect battery.
2. Remove wiper motor as already described.
3. Remove the six screws securing windscreen lower trim panel and remove panel.
4. Remove the wheel boxes from the body.
5. Remove the outer casings, which are secured to the wheel boxes by two screws.

**Wheel box, refit**

1. Ensure that the rubber or steel bush is in position on the spindle housing.
2. Lubricate the spindle and spindle gear with Ragosine Listate 225 grease.
3. Place the wheel box over the flexible drive and secure the housing and cover with the two screws. Ensure that the flared ends of the outer casing engage in the slots of the cover in the two outer positions, and the ends of the centre outer casing are on the inside slot to allow for slight transverse adjustment.

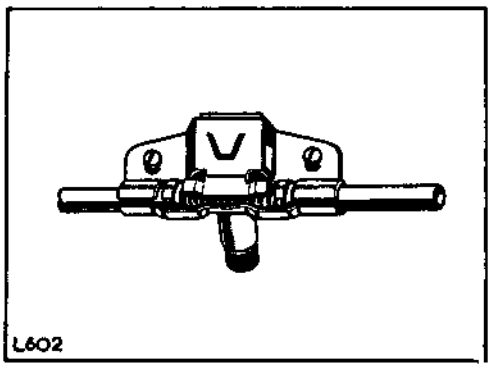


**Fig. N1-50. Outer casing in correct position**

4. Refit the wheel box and drive assembly to the body.
5. Connect the drive to the motor by reversing removal procedure.
6. Refit trim panel.

## Starter motor, type M418G, 2¼ litre and 2.6 litre Petrol models, to overhaul—Operation N1-20

*(For removal and refitting instructions, Section A refers)*

Workshop hand tools:
Spanner size: $\frac{5}{16}$ in. BSF open end
Screwdriver (medium), Ohm meter

Special tools:
Clamp (see text)

### To dismantle

1. Remove cover band.
2. Lift field brushes from guides.
3. Remove nuts and washers from end cover.
4. Remove the two through bolts.
5. Withdraw commutator end cover.
6. Remove starter yoke from armature assembly.
7. Early starter motors—Remove the split pin and special nut from the armature shaft.
8. Latest starter motors—Using a suitable clamp, see illustration, clamp end collar and compress main spring.
9. Remove the circlip from the armature shaft, then remove the clamp.

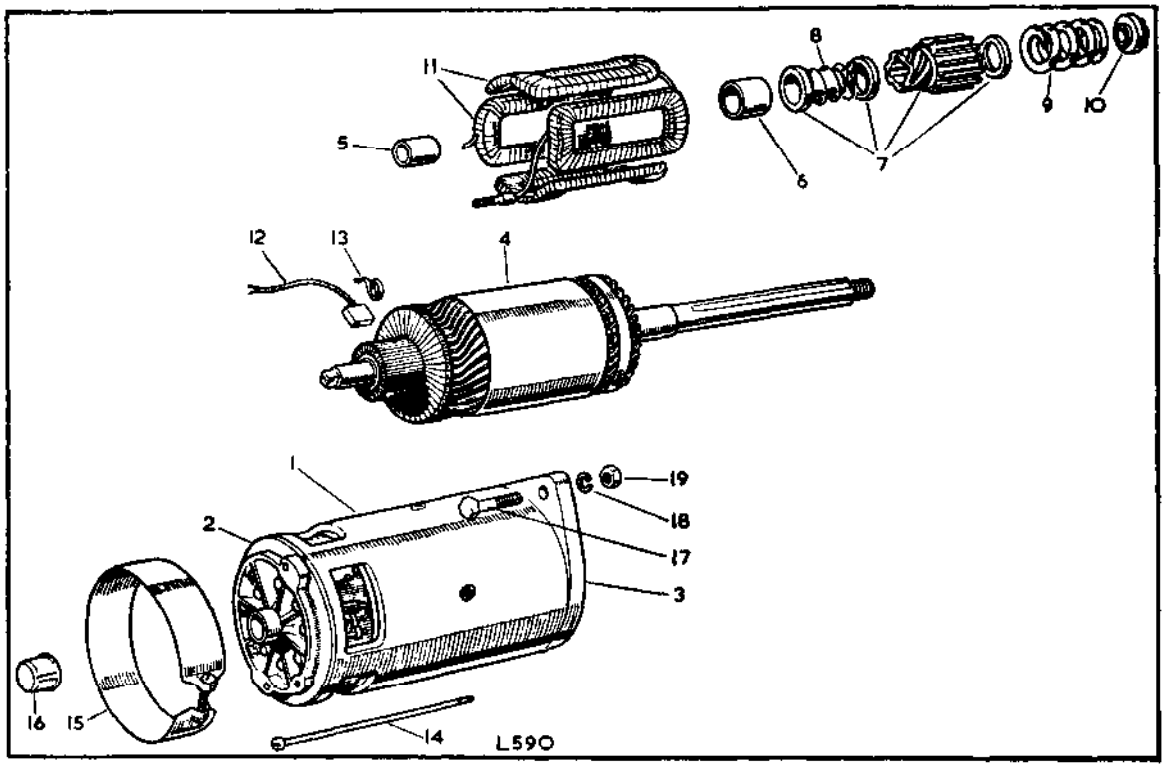


**Fig. N1-51. Layout of starter motor, type M418G, 2¼ litre and 2.6 litre Petrol models**

1 Yoke
2 Bracket for starter, commutator end
3 Bracket, drive end
4 Armature
5 Bush, commutator end
6 Bush, pinion end
7 Pinion and sleeve
8 Spring for pinion
9 Main spring for pinion
10 Nut for pinion
11 Field coil for starter
12 Brushes for starter motor, set
13 Spring set for brushes
14 Bolt for bracket
15 Cover band
16 Grease cap
17 Bolt (⅜ in. BSF x 1¼ in. long) } Fixing
18 Spring washer } starter motor to
19 Nut (⅜ in. BSF) } flywheel housing

## Operation N1-20—*continued*

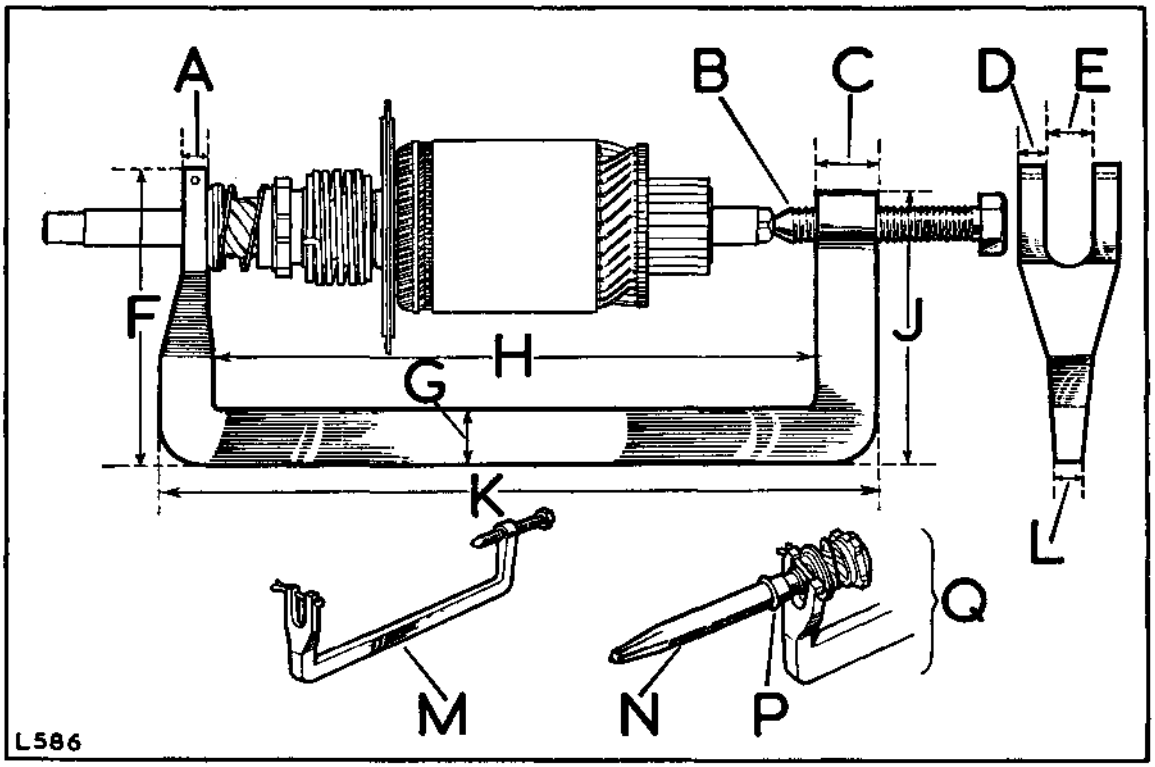


**Fig. N1-52. Method of withdrawing and fitting circlip**

A—$\frac{5}{16}$ in.
B—$\frac{1}{2}$ in. (12,5 mm) diameter bolt
C—1 in. (25,4 mm)
D—$\frac{1}{2}$ in.
E—$\frac{1}{4}$ in.
F—5 in. (127 mm)
G—$\frac{1}{4}$ in.
H—12 in.
J—$4\frac{1}{2}$ in.
K—14 in.
L—$\frac{1}{2}$ in.
M—Suitable clamp made from wrought iron
N—Tube with internal diameter to suit shaft
P—Circlip
Q—Method of replacing circlip using clamp and tube

10. Withdraw the end collar (latest starter motor), main spring, washer, screwed sleeve and pinion, collar, pinion retaining spring and spring retaining sleeve.

### To overhaul

#### Brushes

1. Check that the brushes move freely in their holders by holding back the brush spring and pulling gently on the flexible connectors. Any tendency to stick should be corrected by cleaning with a petrol-moistened cloth, or in extreme cases by the **light** use of a smooth file. If a brush is damaged or worn so that it does not make good contact on the commutator, all the brushes must be renewed.

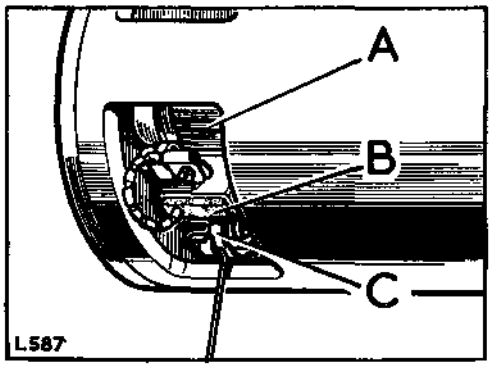


**Fig. N1-53. Checking brushes**

A—Commutator
B—Brush spring
C—Brush

## Operation N1-20—*continued*

2. Check the tension of the brush springs with a spring balance. The correct tension is 30 to 40 oz (850 to 1134 grammes) and new springs must be fitted if the tension is low.

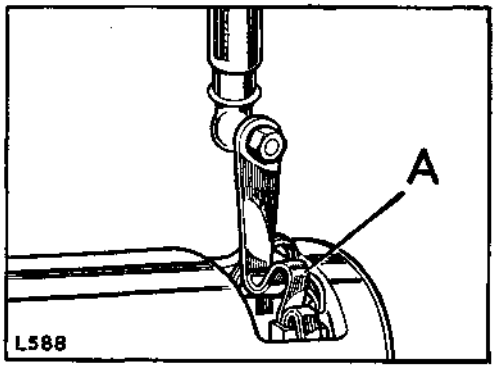


**Fig. N1-54. Testing brush spring tension**
A—Brush spring

3. When brushes are worn to $\frac{5}{16}$ in. (8,0 mm) in length, new replacements must be fitted.
4. The flexible connectors are soldered or crimped to terminal tags; two are connected to brush boxes, and two are connected to the free ends of the field coils. These flexible connectors must be removed by unsoldering, and the flexible connectors of the new brushes secured in their places by soldering.

   The new brushes being pre-formed, 'bedding' to the commutator is unnecessary.

### Commutator

5. Clean the commutator with a petrol-moistened cloth. If necessary, rotate the armature and, using fine glass-cloth, remove pits and burned spots from commutator; remove abrasive dust with a dry air blast. If the commutator is badly worn, mount in a lathe, and, using a very sharp tool, take a light cut, taking care not to remove any more metal than necessary. The insulators between the commutator segments **must not be undercut.** Finally, polish with a very fine glass paper.

### Armature

6. If the armature is damaged, i.e. 'lifted' conductors' or distorted shaft, a new replacement must be fitted. Never attempt to machine the armature core, or true a distorted armature shaft.

### Bearing bushes

If the bearing bushes are worn and allow excessive side play of the armature shaft, new replacements must be fitted.

7. Commutator end bracket bush—Remove brake shoes, thrust washer and Tufnol washer from the end bracket. Screw in a $\frac{3}{16}$ in. tap and withdraw complete with bush.
8. Drive end bracket bush and intermediate bracket bush can be pressed out.
9. New bushes can be fitted using a shouldered mandrel of the same diameter as the shaft.

   **Note:** Before fitting a new porous bronze bush, it should be completely immersed for 24 hours in clean SAE 30-40 engine oil.

   Porous bronze bushes must **not be** reamered after fitting.

### Insulation and continuity checks

If inspection of the armature and field coils of the starter motor do not reveal any faults, it is recommended that the following checks are carried out.

### Armature insulation

1. Attach an ohm meter or a 110 volt AC test lamp in series with a 12 volt battery.
2. With two probes attached to the leads check the armature insulation by touching each commutator segment in turn with the other probe attached to the armature shaft.
3. The test lamp should not light up, or if an ohm meter is used, a high reading should be recorded. Should this not be the case, the armature insulation is faulty and a new replacement armature should be fitted.

### Armature continuity

4. Indication of an open circuited armature winding will be given by burned commutator segments, this can be confirmed by substitution.

## Operation N1-20—*continued*

**Field coil continuity**

5. Connect a battery and suitable bulb in series with two pointed probes.
6. Place the probes on the field coil brush tappings.
7. The test bulb should light, if not an open circuit is indicated and new replacement field coils should be fitted.
8. If the test bulb does light, proceed with the field coil insulation test.

**Field coil insulation**

9. Connect an ohm meter or a 110 volt AC test lamp between the terminal post and a clean part of the yoke.
10. Lighting of the test lamp or a low ohmic reading indicates that the field coils are earthed to the yoke and new replacements must be fitted.

**To assemble** (Fig. N1-51)

1. Refit starter yoke to armature assembly, ensuring that the location peg on the drive end bracket fits into the recess on the yoke.
2. Lift earth brushes up into guides and retain with spring.
3. Fit commutator end cover, ensuring that the earth brush leads do not become trapped between the end cover and the yoke.
4. Fit the two through bolts and spring washers. Tighten the through bolts to a torque figure of 8 lb ft (1,0 mkg).
5. Push down earth brushes on to commutator. The brush spring should act centrally on the brushes.
6. Lift field brush spring with suitable tool, insert field brushes into guides, and allow the springs to act centrally on the brushes.
7. Fit cover band and tighten screw.
8. Fit 'Tufnol' washer, plain washer, spring washer and nut to field coil input post. Loosely attach further spring washer and nut to post.
9. If necessary, fit cover to armature shaft square ended nut.

## Starter motor, type M45G, 2¼ litre Diesel models, to overhaul—Operation N1-21

*(For removal and refitting instructions, Section A refers)*

Workshop hand tools:
Spanner sizes: $\frac{5}{16}$ in. BSF, $\frac{3}{8}$ in. AF, $\frac{7}{16}$ in. AF, $\frac{1}{2}$ in. AF open end
Screwdriver (medium), Feeler gauges, Ohm meter

### To dismantle

1. Remove the cover band, hold back the brush springs and lift the brushes from their holders.
2. Disconnect the earthing lead between the lower solenoid terminal and the starter motor casing.
3. Remove the solenoid securing nuts. Withdraw the solenoid from the drive end bracket casting, having **first marked** the solenoid and drive end bracket in relation to one another.
4. Lift the solenoid plunger up and clear of the starter drive engagement lever, and remove.
5. Unscrew and withdraw the two through bolts from the commutator end bracket, and remove bracket from the starter motor yoke.
6. Remove the rubber seal from the drive end bracket.
7. Remove the driving end bracket, complete with armature, drive and intermediate brackets from the yoke.
8. Remove the nut securing the eccentric pin, on which the drive engagement lever pivots, and withdraw pin.
9. Split the armature and intermediate bracket assembly from the drive end bracket and remove the engagement lever.
10. Push back the lock ring cover on the end of the armature shaft and remove the lock ring.
11. Remove the drive assembly, and intermediate bracket from the armature shaft.

    Note the shim(s) behind the intermediate bracket.

### To overhaul

#### Brushes

1. Check that the brushes move freely in their holders by holding back the brush spring and pulling gently on the flexible connectors. Any tendency to stick should be corrected by cleaning with a petrol-moistened cloth, or in extreme cases by the **light** use of a smooth file. If a brush is damaged or worn so that it does not make good contact on the commutator, all the brushes must be renewed.

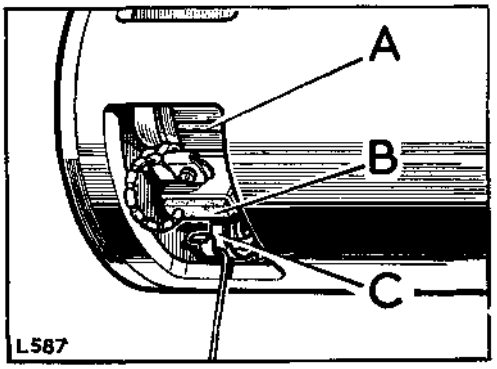


**Fig. N1-55. Checking brushes**

A—Commutator
B—Brush
C—Brush spring

2. Check the tension of the brush springs with a spring balance. The correct tension is 30 to 40 oz (850 to 1134 grammes) and new springs must be fitted if the tension is low.

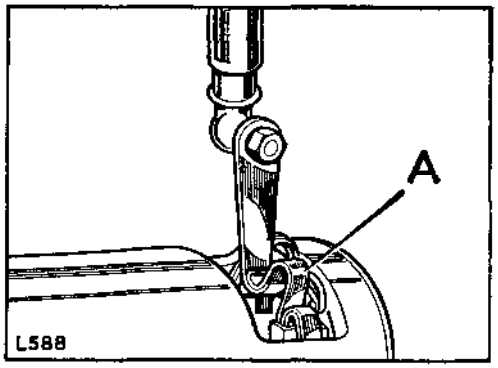


**Fig. N1-56. Testing brush spring tension**

A—Brush spring

3. When brushes are worn to $\frac{5}{16}$ in. (14,3 mm) length, new replacements must be fitted.

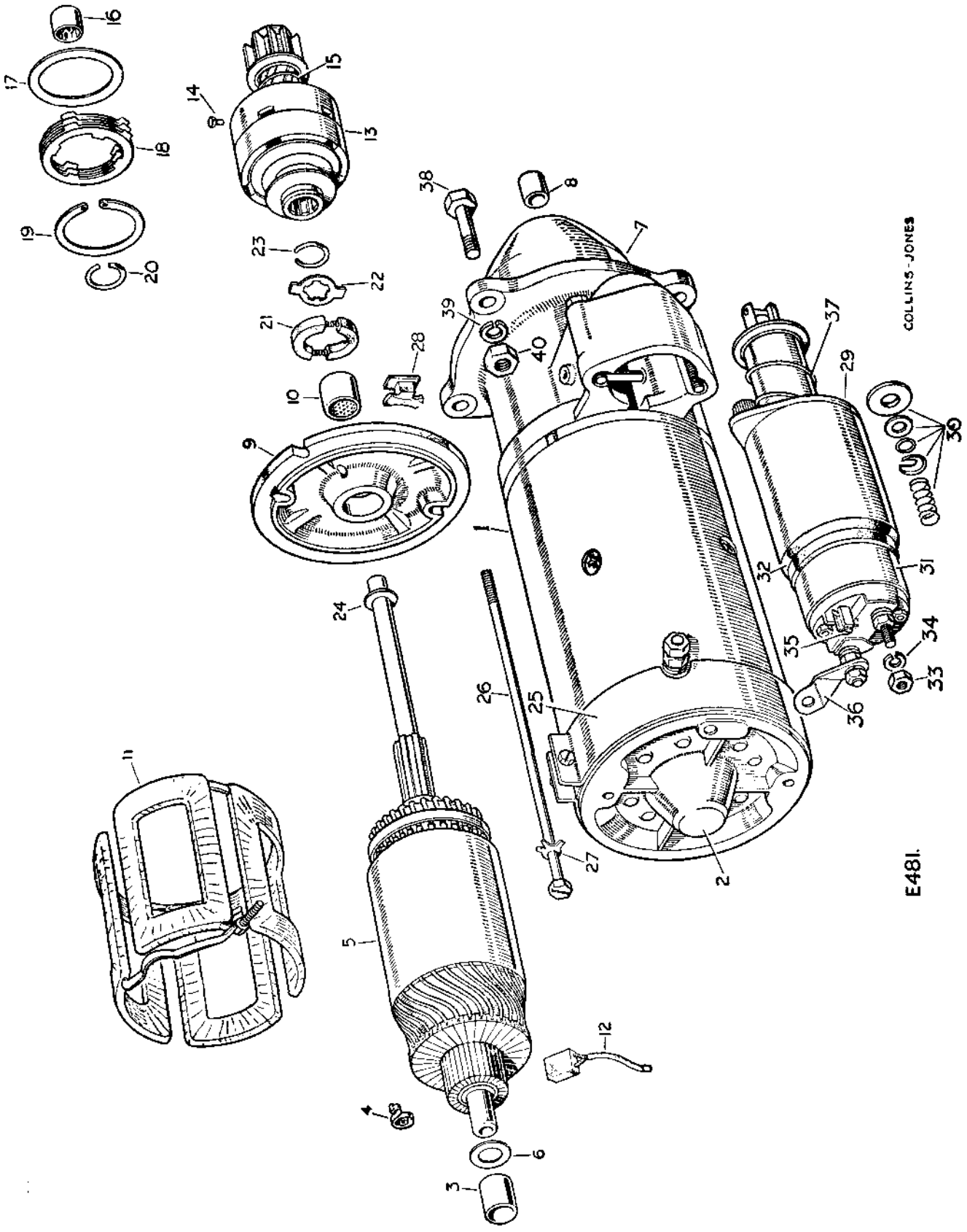


**Fig. N1-57. Layout of starter motor, type M45G, 2¼ litre Diesel models up to engine suffix 'J' inclusive**

**Key to illustration of starter motor, type M45G, 2½ litre Diesel models up to engine suffix 'J' inclusive**

1 Yoke
2 Bracket, commutator end
3 Bush, commutator end
4 Spring set for brushes
5 Armature
6 Thrust washer, commutator end
7 Bracket for starter, drive end
8 Bush for bracket
9 Bracket for brake
10 Bush for brake bracket
11 Field coil for starter
12 Brushes for starter motor, set
13 Drive assembly for starter motor
14 Rivet for pinion retaining ring
15 Return spring for starter pinion
16 Bush, pinion end
17 Clutch adjusting shim
18 Clutch plates
19 Circlip retaining clutch assembly
20 Lock ring retaining clutch plates
21 Brake shoe complete with springs
22 Driving washer for brake shoe
23 Lock ring retaining brake
25 Cover band for starter
26 Bolt for starter motor
27 Lockwasher for bolt
28 Rubber grommet in drive end bracket
29 Solenoid for starter motor
30 Contact plate for solenoid
31 Base for solenoid
32 Gasket for starter solenoid base
33 Terminal nut for starter solenoid
34 Terminal washer for starter solenoid
35 Terminal screw for solenoid
36 Terminal connector for starter motor
37 Plunger spring for solenoid
38 Bolt ($\frac{7}{16}$ in. UNC x $1\frac{1}{4}$ in. long)
Set bolt ($\frac{7}{16}$ in. UNF x 2 in. long)
39 Spring washer
40 Nut ($\frac{7}{16}$ in. UNF)
} Fixing starter motor

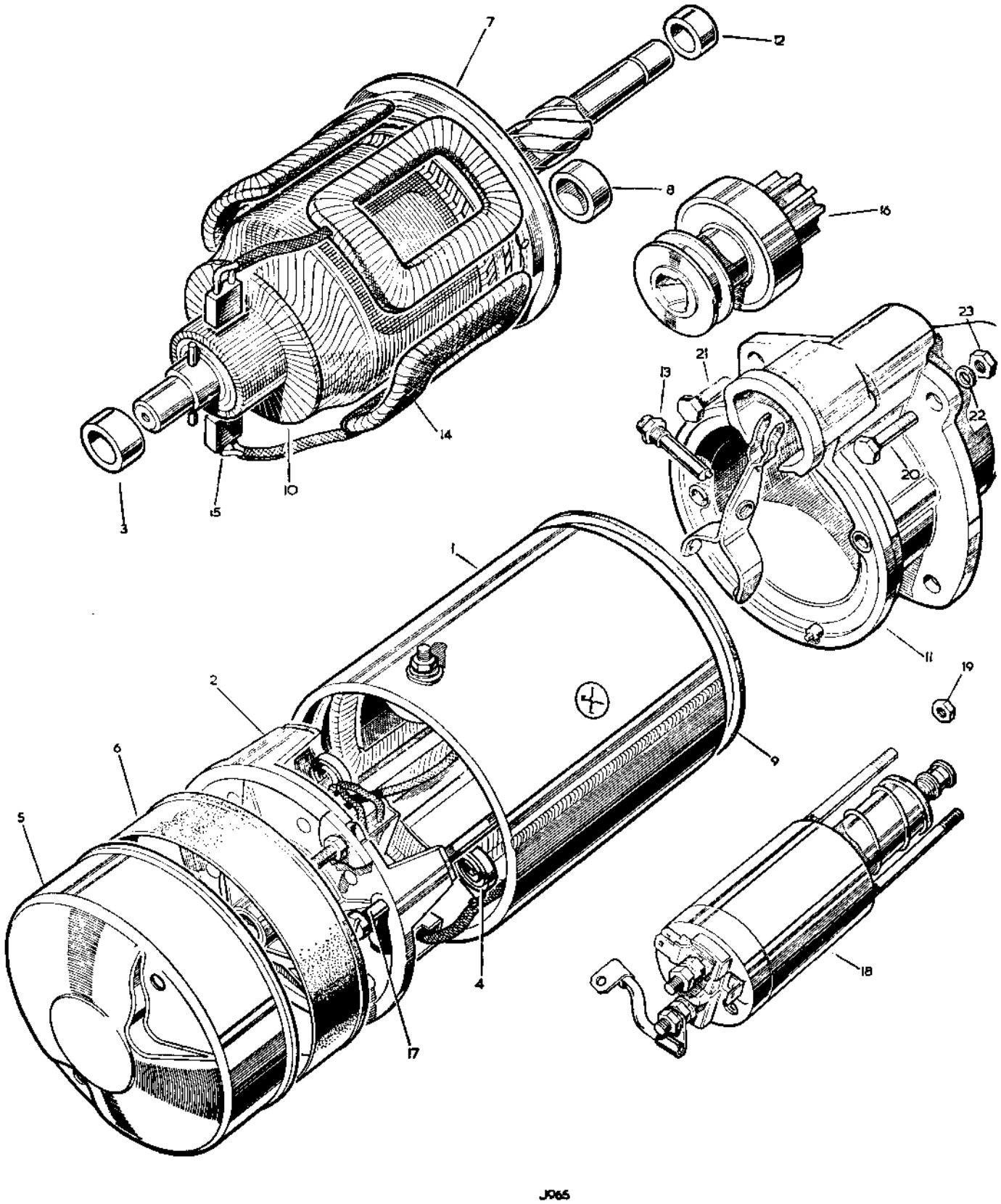


**Fig. N1-58. Layout of starter motor, type M45G, 2½ litre Diesel models from engine suffix 'K' onwards**

**Key to illustration of starter motor, type M45G, 2¼ litre Diesel models from engine suffix 'K' onwards**

1 Yoke
2 Bracket, commutator end
3 Bush, commutator end
4 Spring set for brushes
5 Cover for starter, commutator end
6 Sealing ring for cover, commutator end
7 Intermediate bracket
8 Bush for bracket
9 Sealing ring for Intermediate bracket
10 Armature
11 Bracket for starter, drive end
12 Bush for bracket
13 Pivot pin for starter motor
14 Field coil for starter
15 Brushes for starter motor, set
16 Drive (roller clutch) for starter
17 Bolt for starter motor
18 Solenoid for starter motor
19 Special nut for starter solenoid
20 Bolt ($\frac{7}{16}$ in. UNC x $1\frac{1}{4}$ in. long)
21 Set bolt ($\frac{7}{16}$ in. UNF x 2 in. long)
22 Spring washer
23 Nut ($\frac{7}{16}$ in. UNF)

Fixing starter motor

## Operation N1-21—*continued*

4. The flexible connectors are soldered or crimped to terminal tags; two are connected to brush boxes, and two are connected to the free ends of the field coils. These flexible connectors must be removed by unsoldering, and the flexible connectors of the new brushes secured in their places by soldering.

   The new brushes being pre-formed, 'bedding' to the commutator is unnecessary.

### Commutator

5. Clean the commutator with a petrol-moistened cloth. If necessary, rotate the armature and, using fine glass-cloth, remove pits and burned spots from commutator; remove abrasive dust with a dry air blast. If the commutator is badly worn, mount in a lathe, and, using a very sharp tool, take a light cut, taking care not to remove any more metal than necessary. The insulators between the commutator segments **must not be undercut.** Finally, polish with a very fine glass paper.

### Armature

6. If the armature is damaged, i.e. 'lifted' conductors, or distorted shaft, a new replacement must be fitted. Never attempt to machine the armature core, or true a distorted armature shaft.

### Bearing bushes

If the bearing bushes are worn and allow excessive side play of the armature shaft, new replacements must be fitted.

7. Commutator end bracket bush—Remove brake shoes, thrust washer and 'Tufnol' washer from the end bracket, as applicable. Screw in a $\frac{9}{16}$ in. tap and withdraw complete with bush.
8. Drive end bracket bush and intermediate bracket bush can be pressed out.
9. New bushes can be fitted using a shouldered mandrel of the same diameter as the shaft.

   **Note:** Before fitting a new porous bronze bush, it should be completely immersed for 24 hours in clean SAE 30-40 engine oil.

   Porous bronze bushes must **not** be reamered after fitting.

### Roller clutch

This should rotate freely in one direction and lock up in the other. If faulty, a new replacement must be fitted.

### Insulation and continuity checks

If inspection of the armature and field coils of the starter motor do not reveal any faults, it is recommended that the following checks are carried out.

### Armature insulation

1. Attach an ohm meter or a 110 volt AC test lamp in series with a 12 volt battery.
2. With two probes attached to the leads check the armature insulation by touching each commutator segment in turn with the other probe attached to the armature shaft.
3. The test lamp should not light up, or if an ohm meter is used, a high reading should be recorded. Should this not be the case, the armature insulation is faulty and a new replacement armature should be fitted.

### Armature continuity

4. Indication of an open circuited armature winding will be given by burned commutator segments, this can be confirmed by substitution.

### Field coil continuity

5. Connect a battery and suitable bulb in series with two pointed probes.
6. Place the probes on the field coil brush tappings.
7. The test bulb should light, if not an open circuit is indicated and new replacement field coils should be fitted.
8. If the test bulb does light, proceed with the field coil insulation test.

### Field coil insulation

9. Connect an ohm meter or a 110 volt AC test lamp between the terminal post and a clean part of the yoke.
10. Lighting of the test lamp or a low ohmic reading indicates that the field coils are earthed to the yoke and new replacements must be fitted.

## Operation N1-21—*continued*

### Starter solenoid, to test

Tests should be carried out with the solenoid cold. DO NOT attempt to repair a faulty solenoid, fit a new replacement.

The solenoid is composed of two coils, namely, a closing coil, bypassed when the plunger is fully home, and a hold-on coil to retain the plunger in the fully home position.

To test individually, remove existing connections and with the use of a 4 volt DC supply (constant voltage), proceed as below:

#### Closing coil

1. Connect the supply between the solenoid terminal marked 'S T A' and the smaller centre terminal. This should cause a current of 14.8 to 17.4 amps to pass.

#### Hold-on coil

2. Connect the supply between the solenoid body and the small centre terminal. This should cause a current of 4.5 to 5.6 amps to pass.

#### Solenoid contacts

3. Remove the earthing strap, connecting solenoid terminal 'S T A' with the starter yoke.
4. Connect a 10 volt DC supply with a switch in series, to the large terminal marked 'S T A' and the small unmarked terminal.
5. Connect a test lamp, and suitable battery, across the two large solenoid terminals.
6. Insert a stop in the drive end bracket to restrict the pinion travel to out of mesh clearance, normally $\frac{1}{8}$ in. (3 mm). An open ended spanner of approximate size and thickness is suitable, fitted with its jaws embracing the armature shaft extension.
7. Energise the 10 volt supply. The test light bulb should light and remain on, indicating that the solenoid contacts are fully closed.
8. Switch off the 10 volt supply and remove the stop from the armature shaft.
9. Switch on and hold the pinion assembly in the fully engaged position.
10. Switch off. The test lamp should go out, indicating the opening of the solenoid contacts.

**To reassemble** (Figs. N1-57 and N1-58)

1. Fit shim and intermediate bracket to armature shaft.
2. Lubricate drive assembly with general purpose grease, see Section X, and fit drive assembly to armature shaft.
3. Fit lock ring cover to armature shaft, with recess for lock ring to front.
4. Fit a **new** lock ring to shaft, and snap lock ring cover over the lock ring.
5. Fit engagement lever to drive assembly, and fit drive end bracket, ensuring correct location of peg into intermediate bracket.
6. Fit eccentric pin to engagement lever.
7. Fit drive end assembly (drive end bracket, drive assembly and intermediate bracket) to armature shaft assembly ensuring correct location of peg.
8. Fit rubber seal to drive end bracket, ensuring correct location, i.e. plain end of rubber seal to rear, wide lips to yoke body.
9. Locate earth brushes into guides in commutator end bracket, and trap clear with spring.
10. Ensure that the field brushes appear through yoke apertures opposite each other.
11. Fit commutator end bracket to yoke, ensuring that the earth leads do not become trapped between the yoke and the end bracket.
12. If applicable, press down lightly, turn commutator end bracket until brake driving peg aligns with the slots in the brake shoes, and push in.
13. Align location peg between yoke and commutator end bracket.
14. Fit the two through bolts and tighten to a torque figure of 8 lb/ft (1,0 mkg).
15. Fit field brushes, see Fig. N1-55, ensure that spring is in centre of brush in all cases.
16. Turn eccentric pin until the engagement lever is in its lowest and most forward position. Fit solenoid plunger.

## Operation N1-21—*continued*

17. Fit solenoid to drive end bracket, and earthing strap to yoke, aligning location marks made during dismantling.
18. Attach earthing lead to post on yoke.
19. Fit cover band and tighten.

**To set solenoid**

20. Connect the small unmarked terminal on the solenoid to one side of a 12 volt battery. Using a switch, connect the other side of the battery to a solenoid fixing stud.
21. Close the switch, thus throwing the drive assembly forward into the engaged position. Measure the distance between the pinion and the lock ring cover on the armature shaft.
22. Press the pinion lightly forward, towards the armature, to take up any free play in the engagement linkage. The setting under these conditions should be .005 in. to .015 in. (0,12 mm to 0,40 mm). Adjustment is made by rotating the eccentric pin until the correct clearance is obtained. The adjustment arc is 180° and the head of the arrow marked on pivot pin, should be set only within 90° either side of the cast arrow on the casing. After setting, tighten the securing locknut.

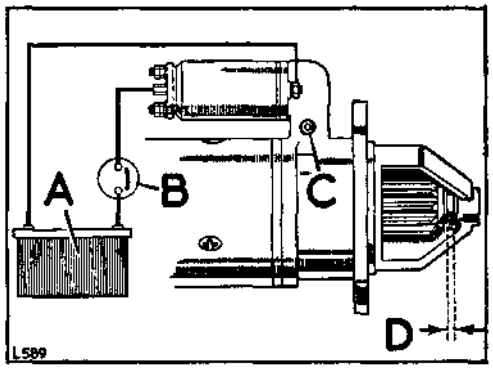


**Fig. N1-59. Adjusting pinion clearance with solenoid energised**

A—Battery
B—Switch
C—Eccentric pivot pin
D—Clearance 0.005 in. to 0.015 in. (0,12 mm to 0,40 mm)

## Dynamo, to overhaul—Operation N1-22

Workshop hand tools:
Spanner size: $\frac{11}{16}$ in. AF socket
Screwdrivers (medium and small)

Special tools:
Ammeter, Ohm meter,
Voltmeter 0–20 volt (moving coil)

### General

Three types of dynamo are in use, types C39, C40 and C42. The type numbers are stamped on the dynamo yoke (main outer case) to facilitate identification. The following instructions cover all three types, and details of checking the dynamo in situ and when dismantled are included at the end of this operation.

### To dismantle

1. Remove fixings and withdraw driving pulley using a suitable extractor.
2. Remove dynamo fan and shims.
3. Remove the through bolts and withdraw the commutator end bracket and fibre thrust washer.
4. Withdraw the driving end bracket complete with armature.

### To overhaul

#### Brushes

1. Lift the brushes up into the brush boxes and secure them there by positioning the brush spring at the side of the brush.
2. Fit the commutator end bracket over the commutator and release the brushes.
3. Check that the brushes move freely in their holders by holding back the brush spring and pulling gently on the flexible connectors. Any tendency to stick should be corrected by cleaning with a petrol-moistened cloth, or in extreme cases by the **light** use of a smooth file. If a brush is damaged or worn so that it does not make good contact on the commutator, all the brushes must be renewed.

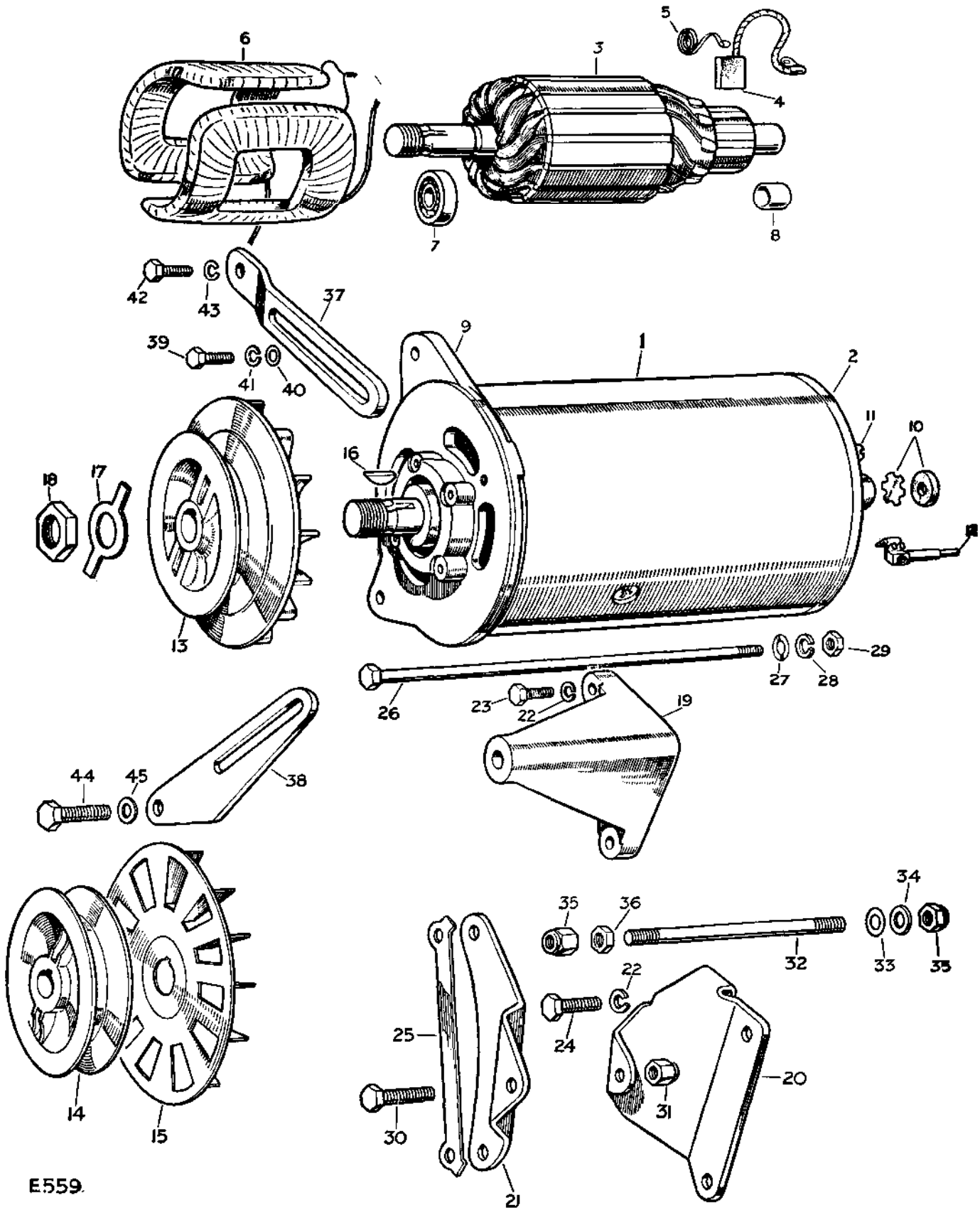


Fig. N1-60. Layout of dynamo, types C39 and C40

**Key to illustration of dynamo, types C39 and C40**

1 Yoke
2 Bracket, commutator end
3 Armature for dynamo
4 Brushes for dynamo, set
5 Spring set for brushes
6 Field coil for dynamo
7 Ball bearing, front
8 Bush, commutator end
9 Bracket, drive end
10 Oiler for dynamo
11 Bolt for bracket
12 Terminal, set
13 Pulley for dynamo
14 Pulley for dynamo
15 Fan for dynamo
16 Woodruff key } Fixing pulley to dynamo
17 Lockwasher / Spring washer } Fixing pulley to dynamo
18 Special nut } Fixing pulley to dynamo
19 Anchor bracket for dynamo
20 Support bracket for dynamo
21 Steady bracket for dynamo
22 Spring washer } Fixing anchor or support bracket
23 Set bolt ($\frac{5}{16}$ in. UNF x $1\frac{1}{8}$ in. long) } Fixing anchor or support bracket
24 Set bolt ($\frac{5}{16}$ in. UNF x $\frac{5}{8}$ in. long) } Fixing anchor or support bracket
25 Locking plate for dynamo bolts
26 Bolt ($\frac{5}{16}$ in. UNF x 7 in. long) } Fixing dynamo to anchor bracket
27 Shim washer } Fixing dynamo to anchor bracket
28 Spring washer } Fixing dynamo to anchor bracket
29 Nut ($\frac{5}{16}$ in. UNF) } Fixing dynamo to anchor bracket
30 Bolt ($\frac{5}{16}$ in. UNF x $1\frac{3}{8}$ in. long) } Fixing dynamo to front support
31 Self-locking nut ($\frac{5}{16}$ in. UNF) } Fixing dynamo to front support
32 Special stud } Fixing dynamo to support bracket
33 Shim washer } Fixing dynamo to support bracket
34 Plain washer } Fixing dynamo to support bracket
35 Self-locking nut ($\frac{5}{16}$ in. UNF) } Fixing dynamo to support bracket
36 Locknut ($\frac{5}{16}$ in. UNF) } Fixing dynamo to support bracket
37 Adjusting link for dynamo
38 Adjusting link for dynamo
39 Special bolt } Fixing adjusting link to dynamo
40 Plain washer } Fixing adjusting link to dynamo
41 Spring washer } Fixing adjusting link to dynamo
42 Set bolt ($\frac{5}{16}$ in. UNC x $\frac{3}{8}$ in. long) } Fixing adjusting link to front cover
43 Spring washer } Fixing adjusting link to front cover
44 Bolt ($\frac{5}{16}$ in. UNF x $3\frac{1}{4}$ in. long) } Fixing adjusting link to front cover
45 Plain washer } Fixing adjusting link to front cover

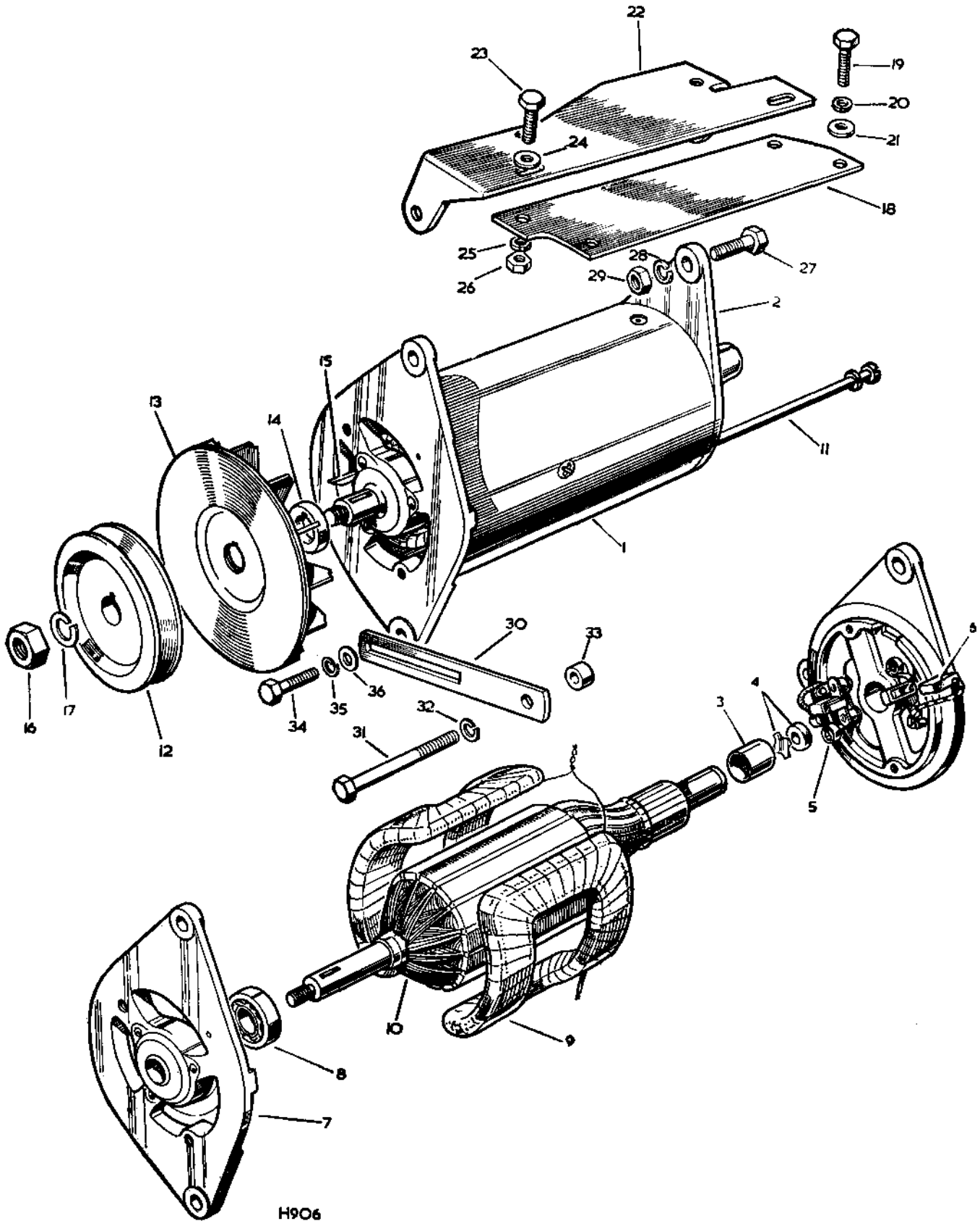


**Fig. N1-61 Layout of dynamo, type C42**

**Key to illustration of dynamo, type C42**

1 Yoke
2 Bracket, commutator end
3 Bush for armature, commutator end
4 Oiler for dynamo
5 Springs, set, for brush tension
6 Brushes, set, for dynamo
7 Bracket, drive end
8 Ball bearing, drive end
9 Field coil for dynamo
10 Armature for dynamo
11 Bolt for bracket
12 Pulley for dynamo
13 Fan for dynamo
14 Distance washer for fan
15 Woodruff key
16 Special nut
17 Spring washer
} Fixing pulley to dynamo
18 Mounting plate for dynamo
19 Set bolt ($\frac{5}{16}$ in. UNF x $\frac{3}{4}$ in. long)
20 Spring washer
21 Plain washer
} Fixing mounting plate to cylinder block
22 Anchor bracket for dynamo
23 Bolt ($\frac{5}{16}$ in. UNF x 1 in. long)
24 Plain washer
25 Spring washer
26 Nut ($\frac{5}{16}$ in. UNF)
} Fixing anchor bracket to mounting plate
27 Bolt ($\frac{5}{16}$ in. UNF x 1 in. long)
28 Spring washer
29 Nut ($\frac{5}{16}$ in. UNF)
} Fixing dynamo to anchor bracket
30 Adjusting link for dynamo
31 Set bolt ($\frac{5}{16}$ in. UNF x $2\frac{1}{4}$ in. long)
32 Spring washer
33 Distance piece
} Fixing adjusting link to cylinder block
34 Set bolt ($\frac{5}{16}$ in. UNC x $\frac{7}{8}$ in. long)
35 Spring washer
36 Plain washer
} Fixing adjusting link to dynamo

## Operation N1-22—*continued*

4 Measure brush spring pressures using a spring balance held radially to the commutator.

The maximum spring pressure permissible on a new brush is as follows:

Dynamo type C39—25 ozs (709 grammes).

Dynamo type C40—30 ozs (850 grammes).

Dynamo type C42—33 ozs (940 grammes).

The minimum pressure on a fully worn brush is as follows:

Dynamo type C39—15 ozs (425 grammes).

Dynamo type C40—13 ozs (370 grammes).

Dynamo type C42—16 ozs (450 grammes).

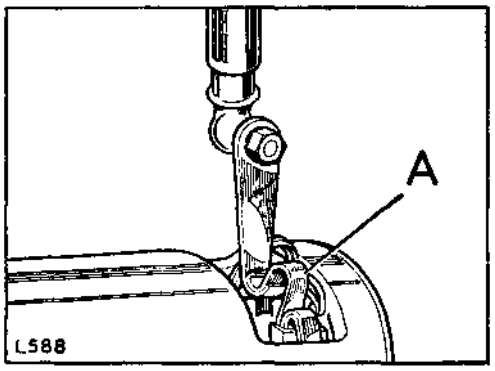


**Fig. N1-62. Testing brush spring tension**

A—Brush spring

5. To renew brushes, remove screw from mounting block and withdraw lead and brush, and washer. When brushes are worn to a depth of $\frac{1}{4}$ in. (6,3 mm) new replacements should be fitted.

New brushes are pre-formed and 'bedding' to commutator is not necessary.

### Commutator

There are two types of commutator in use, a moulded one and a fabricated type.

A moulded commutator can be recognised by the exposed end being quite smooth, unlike that of the fabricated commutator from which a metal roll-over and an insulating cone protrude.

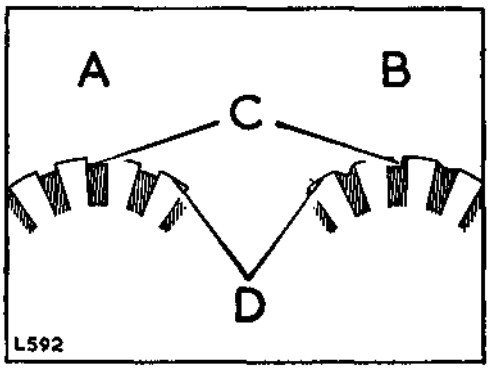


**Fig. N1-63. Undercutting commutator insulators**

A—Correct C—Insulators
B—Incorrect D—Segments

A moulded commutator can be skimmed to a minimum finished diameter of 1.450 in. (36,83 mm). A moulded commutator can **NOT** be undercut. The insulation slots must be kept clean.

6. Clean the commutator with a petrol-moistened cloth. If necessary, rotate the armature and, using fine glass-cloth, remove pits and burned spots from the commutator; remove abrasive dust with a dry air blast. If the commutator is badly worn, mount in a lathe, and, using a very sharp tool take a light cut, taking care not to remove any more metal than necessary.

Dynamos fitted with fabricated commutator—Undercut the insulators between the segments to a depth of $\frac{1}{32}$ in. (0,7 mm) with a hacksaw blade ground to the thickness of the insulator.

### Bush for commutator end bracket

7. To replace a bush in the commutator end bracket, screw a $\frac{5}{8}$ in. tap squarely into the bush for a few turns and pull out complete with bush.

8. Withdraw felt ring retainer and felt ring, fit new felt ring and replace retainer.

9. Press new bush into commutator end bracket using a shouldered mandrel of the exact diameter of the bush. DO NOT reamer the bush as this would adversely affect its porous surface.

**Note:** The bush is manufactured from porous bronze, and must be immersed in clean SAE 30 oil for 24 hours prior to fitting.

## Operation N1-22—*continued*

**Bearing for drive end bracket**

1. To replace bearing in drive end bracket, first remove split distance collar and armature shaft key.
2. Using a suitable press and support plate, press armature shaft out of drive end bracket.

**Early type bearing location** (items 3 to 10)

3. Remove the screws or drill out the rivets from the bearing retaining plate and withdraw the retaining plate.

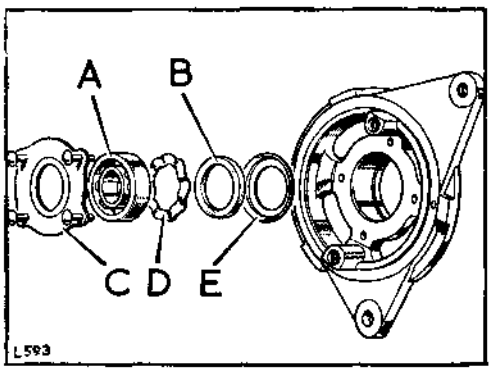


**Fig. N1-64. Bearing location, early type**

A—Bearing
B—Felt washer
C—Bearing retaining plate
D—Corrugated washer
E—Retaining washer

4. Press the bearing from the end bracket.
5. Remove and clean the corrugated washer and felt ring.
6. Before fitting the replacement bearing, ensure that it is clean and packed with high melting point grease.
7. Refit felt ring and corrugated washer.
8. Press in new bearing.
9. Fit retaining plate and secure rigidly, using screws or rivets as applicable.
10. Press armature through the drive end bracket until the location collar abuts the bearing location then fit split distance collar and armature shaft key.

**Latest type bearing location** (items 11 to 17)

11. Insert a screwdriver into the extractor notch and remove the circlip.
12. Remove the bearing retaining plate, push out bearing and remove pressure ring, retaining plate and felt ring.

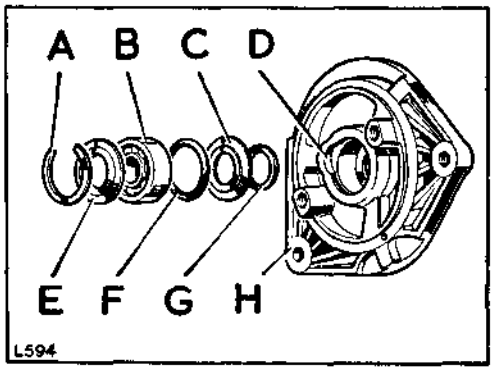


**Fig. N1-65. Bearing location, latest type**

A—Circlip
B—Bearing
C—Retaining plate for felt ring
D—Circlip extractor notch
E—Bearing retaining plate
F—Pressure ring
G—Felt ring
H—Drive end bracket

13. Renew felt ring and pressure ring and replace with retaining plate in order illustrated.
14. Fit new bearing and bearing retaining plate. The bearing must be packed with high melting point grease, unless it is of the sealed type which are pre-packed during manufacture.
15. Using a suitable hand press, compress the assembly sufficient to allow the circlip to relocate itself.
16. Press the armature through the drive end bracket until location collar abuts the bearing location.
17. Refit split distance collar and armature shaft key.

**To assemble** (Figs. N1-60 and N1-61)

1. Fit armature and drive end bracket into the yoke, and locate on peg.
2. Fit the fibre washer to commutator end of armature shaft.

## Operation N1-22—*continued*

3. Lift the brushes up into the brush boxes and secure them in that position by positioning the brush spring at the side of the brush.
4. Fit the commutator end bracket on the armature shaft until the brush boxes are partly over the commutator. Place a thin screwdriver on top of each brush in turn and press the brush down on the commutator. The brush springs should then position themselves on top of the brushes.
5. Fit the commutator end bracket to the yoke so that the projection on the bracket locates in the yoke, and the field terminal passes through the slot in the commutator end bracket.
6. Fit the two through bolts.
7. Refit shims removed from behind dynamo fan.
8. Fit dynamo fan and pulley, and secure the fixings.
9. Inject a few drops of any high quality medium viscosity (SAE 30) engine oil into the hole marked 'Oil' at the end of the commutator bearing housing.

### Dynamo, to check

In a faulty charging circuit, the dynamo should be checked as follows:

### Testing in situ

1. Inspect the driving belt and adjust if necessary.
2. Check terminal connections. Terminal 'D' carries the dynamo output, 'F' the field current.
3. Disconnect the terminal leads and link the terminals with a short length of bare wire.
4. Run engine at idling speed.
5. Attach a 0–20 volt moving-coil voltmeter to one generator terminal, and earth to the yoke.
6. Increase engine rpm gradually. The voltmeter reading should rise rapidly and without fluctuation.
7. If the voltage does not rise rapidly and evenly the dynamo must be dismantled for detailed examination.
8. If excessive sparking at the commutator is observed in the above test, the armature is faulty and must be changed for a new replacement.

### Testing when dismantled

#### Armature insulation

9. Attach an ohm meter or a 110 volt AC test lamp in series with a 12 volt battery.
10. With two probes attached to the leads, check the armature insulation by touching each commutator segment in turn with the other probe attached to the armature shaft.
11. The test lamp should not light up, or if an ohm meter is used, a high reading should be recorded. Should this not be the case, the armature insulation is faulty and a new replacement armature should be fitted.

#### Armature continuity

12. Indication of an open circuited armature winding will be given by burned commutator segments, this can be confirmed by substitution.

#### Field coils

13. To check both the insulation and continuity of the field coils, connect an ohm meter or an ammeter between the field terminal and the yoke, in series with a 12 volt battery.
14. If the field coils are in good order, the following readings should be obtained:

| | Field coil resistance (ohms) | Normal ammeter reading (amps) |
|---|---|---|
| C39 type dynamo .. .. | 6.1 | 2 |
| C40 type dynamo .. .. | 5.9–6.0 | 2 |
| C42 type dynamo .. .. | 4.5 | 2½ |

15. An infinity reading on the ohm meter indicates an open circuit and the field coil should be replaced with new. With an ammeter in series, no reading would indicate an open circuit.
16. A low ohm meter reading or a high current reading indicate that the insulation is faulty and new field windings are required.

## Alternator output control unit, Model 4TR, to test and adjust—Operation N1-23

Workshop hand tools:
Screwdriver

Special tools:
Voltmeter, Ammeter

### Maintenance

The output control unit does not require any regular maintenance, but the moulded cover should be kept clean, and the terminals checked for tightness.

### Control unit, test

1. Before checking and adjusting the control unit it must be established that the alternator and charging circuit wiring are in good order. See Operation N1-26. The battery to control unit wiring, including the 6RA field isolating relay, must also be in good order. See Operation N1-26, item 9. The resistance of this circuit, including the relay, must not exceed 1 ohm. Higher resistance must be traced and remedied.
2. Disconnect the alternator main output lead from the alternator or starter solenoid, and connect an ammeter of 50 amp range in series with the lead and its connection.
3. Connect a voltmeter of 1 per cent accuracy or better between the battery terminals and note the reading with all electrical equipment switched off. If available, use a voltmeter of the suppressed —zero type, reading 12–15 volts.
4. Switch on the side and tail lights to give an electrical load of approximately 2 amperes.
5. Start the engine and run the alternator at approximately 3,000 rpm for at least 8 minutes to ensure the system voltage has stabilised. If the charging current is greater than 10 amperes, continue to run the engine until this figure is reached. The voltmeter should then read 13.9 to 14.3 volts.

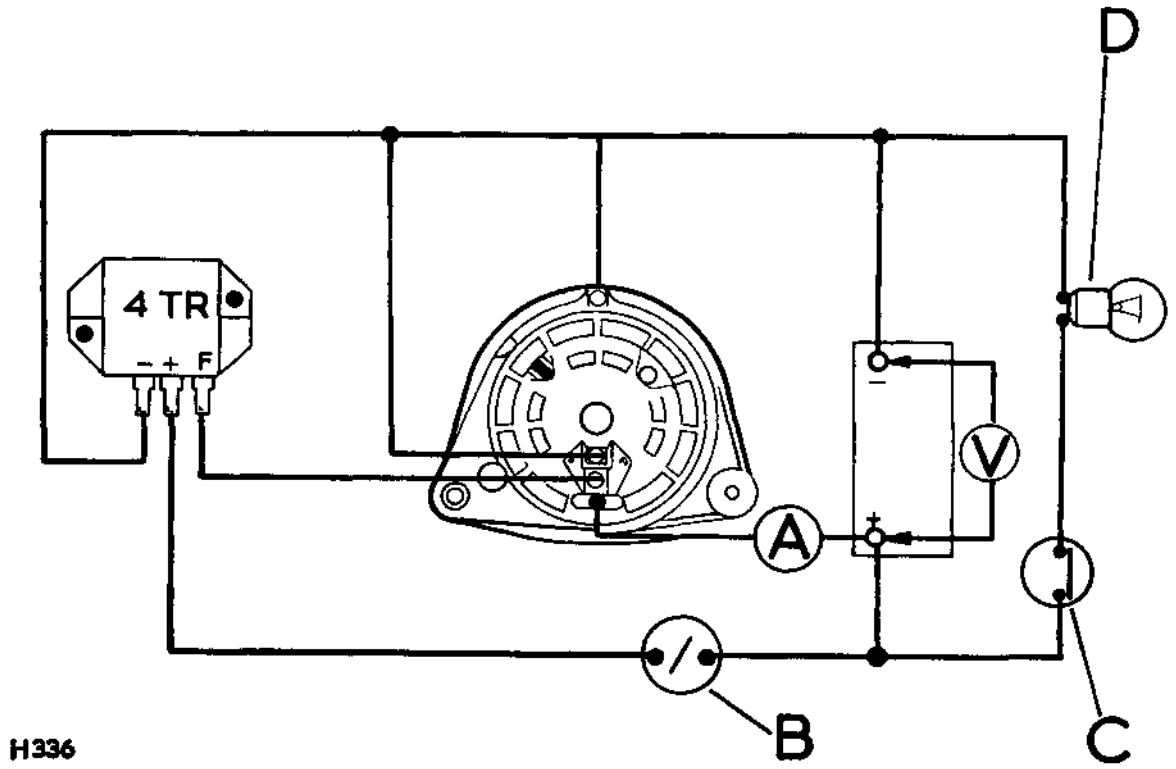


**Fig. N1-66. 4TR control unit test circuit**

A—Ammeter
B—Field isolating relay
C—Side and tail lamp switch
D—Side and tail lamps
V—Voltmeter

## Operation N1-23—*continued*

6. If the reading obtained is stable, but outside these limits, the unit can be adjusted to obtain the correct voltage.
7. If the voltmeter reading remains unchanged at open circuit battery voltage, or increases in an uncontrolled manner, the control unit is faulty and must be replaced.

**Control unit, adjust**

1. Test control unit as already described.
2. Stop the engine and remove the control unit securing screws, invert the unit and carefully scrape away the sealing compound that conceals the potentiometer adjuster.
3. Start the engine and run the alternator at approximately 3,000 rpm with the voltmeter firmly connected to the battery terminals. Turn the potentiometer adjuster slot clockwise to increase the voltage setting, or counter-clockwise to decrease it. A small movement of the adjuster causes an appreciable difference in the voltage reading.
4. Recheck the setting by stopping the engine, then restarting and running the alternator at 3,000 rpm.
5. Disconnect the voltmeter and ammeter. Reconnect the alternator output lead.
6. Refit the control unit.

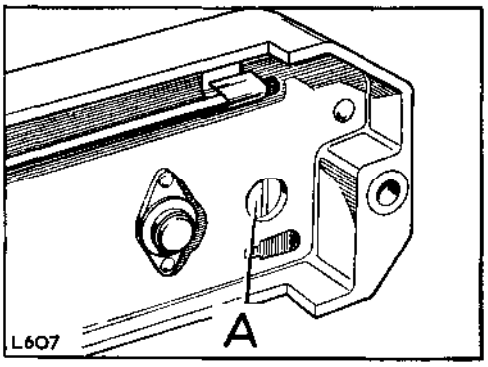


**Fig. N1-67. 4TR alternator control, rear view**

A—Potentiometer adjuster

# Alternator field isolating relay, Model 6RA, to test and adjust—Operation N1-24

Workshop hand tools:
Screwdriver (medium)
Screwdriver (electrician's)
Pliers, Pliers (long-nosed)

Special tools:
Variable DC supply 0–15 volts
Voltmeter, 0–20 volts
Bulb, 12 volts, 1.5 watt

## General

The relay has a pair of normally open contacts, is actuated by a continuous rated winding, and has four blade-type terminals, marked C1, C2, W1 and W2.

Terminal C1 is associated with the fixed contact post, C2 with the moving contact; W1 and W2 are the ends of the operating winding. The relay is protected by a metal case secured to the base by gimping.

The relay should be replaced as a unit in the event of failure. Where facilities are available, the case can be removed for checking the contacts, mechanical settings and soldered connections.

## Maintenance

Check the tightness of the terminals.

## Field isolating relay, test

1. Connect terminals C1 and C2 in series with a 1.5 watt bulb and terminals of a 12 volt battery.
2. Connect terminals W1 and W2 of the relay to the terminals of the battery.
3. The bulb should light when the relay winding between W1 and W2 is energised. If the bulb does not light, the relay winding or contacts are faulty and the relay should be replaced.

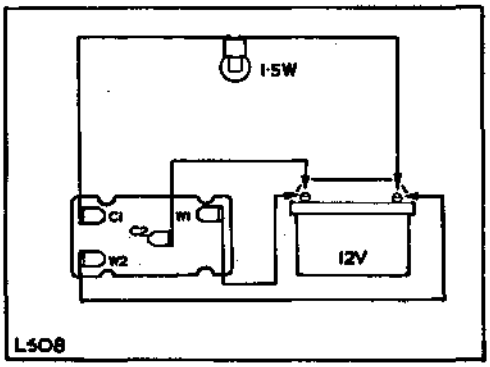


**Fig. N1-68. 6RA relay winding and contact test**

## Field isolating relay, adjust

1. Prise open the gimping securing the cover to the base.
2. Connect a first grade moving coil voltmeter across the relay operating winding, terminals W1 and W2.
3. Connect a variable direct current supply 0–15 volts to the winding terminals, W1 and W2.
4. Check the cut-in setting by raising the supply voltage from zero. The contacts should close when the voltage is 6.0 to 7.5 volts. The setting is raised by increasing the air gap between the underside of the armature and the bobbin core, and lowered by decreasing the air gap.
5. Check the drop-off setting by raising the voltage to 15 volts then slowly reducing it; the contacts should open at 4.0 volts minimum. The drop-off setting is raised by raising the height of the fixed contact post to increase the contact pressure. The drop-off setting is lowered by lowering the fixed contact post and contact pressure.
6. Disconnect the voltmeter and voltmeter supply.
7. Place the sealing gasket in the case flange and insert the relay assembly. Press the components firmly together and secure at four points by gimping the case lip.
8. Recheck the cut-in and drop-off settings.

# Alternator warning light control, Model 3AW, to bench test—Operation N1-25

Special tools:
12 volt battery with accessible intercell connections
2.2 watt 12 volt bulb in holder
Three battery connector clips
Three Lucar connections
Watch with second hand

## General

The warning light control is a thermally operated relay for controlling the switching on and off of an instrument panel warning light. It is connected to the centre point of one pair of the alternator diodes through terminal 'AL' on the alternator, and to earth. The indication given by the warning light is similar to that provided by the ignition '(no charge') warning light used with dynamo charging systems.

**Warning.** Due to the external similarity of the alternator warning light control model 3AW to flasher unit model FL5, a distinctive green label is applied to the aluminium case of model 3AW.

Care must be taken to avoid connecting either of these units into a circuit designed for the other.

## Maintenance

Check the tightness of the terminals. Model 3AW is a sealed unit.

## Warning light control, test

1. Connect terminal 'E' of the warning light control to the battery negative terminal.
2. Connect the 2.2 watt bulb in series with the terminal 'WL' of the warning light control and the positive battery terminal. The bulb should light up immediately. If the bulb does not light up, the warning light control is faulty and must be replaced.
3. With the terminals connected as in 1 and 2 above, connect terminal 'AL' of the warning light control to the 6 volt tapping of the battery. The bulb should go out within five seconds.
4. Transfer the battery connection of terminal 'AL' to the positive battery terminal for ten seconds only. Then quickly transfer it to the battery 2 volt tapping. The bulb should light up within five seconds.
5. If the performance in items 3 and 4 differs appreciably from the test requirements, the unit is faulty and must be replaced.

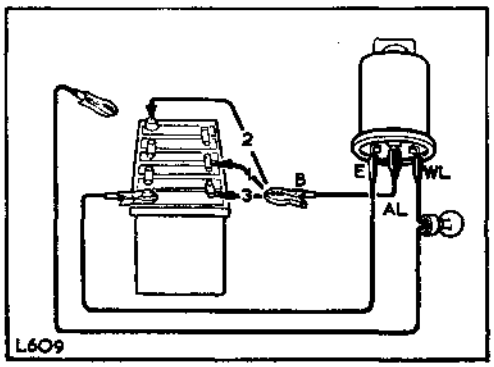


**Fig. N1-69. Bench test for warning light control, model 3AW**

Connect battery clip 'B' in sequence 1, 2 and 3

## Battery charging system, test—Operation N1-26

Special tools:
Ammeter, 0–50 amperes
Extension leads with clips
Voltmeter, 0–15 volts

### Charging system, test

1. Check the alternator driving belt for wear and tension. Adjust if necessary.
2. Disconnect the battery negative terminal.
3. Disconnect the 35 amp alternator output lead from the alternator and connect a good quality moving coil ammeter between the output terminal and alternator output lead.
4. Disconnect the leads from the alternator field terminals, and connect them to the battery terminals with the extension leads. Polarity is unimportant.

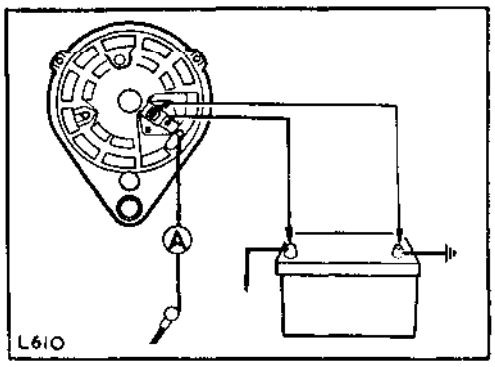


**Fig. N1-70. Alternator output test**
A—Ammeter

5. Reconnect the battery negative terminal. Start the engine and increase the speed until the alternator is running at approximately 4,000 rpm. The ammeter reading should be approximately 40 amps and if this figure is obtained the alternator and output cable are in order.
6. If a zero or low reading is obtained, check the output circuit and wiring by connecting a voltmeter between the alternator output terminal and the battery positive terminal and noting the reading; then transfer the voltmeter to the alternator frame and the battery negative terminal and noting the reading. If either reading exceeds 0.5 volt there is high resistance in the circuit that must be traced and remedied.

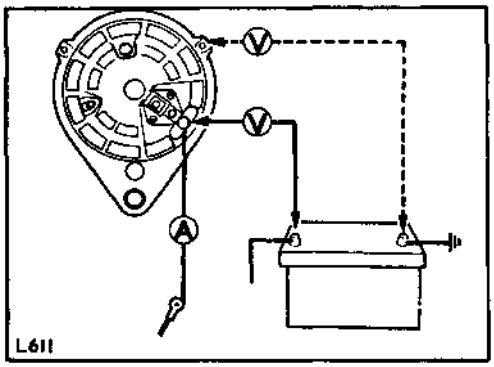


**Fig. N1-71. Charging circuit voltage drop test**
A—Ammeter V—Voltmeter

7. If the test in item 6 does not reveal high resistance, and alternator output is low, remove and examine the alternator brush gear. Retest and, if low output persists, replace or overhaul the alternator.
8. If the alternator output is in order, disconnect the battery negative terminal, remove the ammeter and connect the alternator output cable to its terminal. Remove the extension leads from the alternator field cables.
9. Connect the battery negative terminal. Switch on the ignition, and check that battery voltage is applied to the cable ends normally attached to the alternator field terminals by connecting a voltmeter across them. A reading of battery voltage proves that the field isolating relay circuit and wiring is in order. Conversely, a low or zero reading indicates a fault in the field isolating relay associated wiring, or the alternator output control unit. See Operation N1-24 for testing of field isolating relay. Refer to circuit diagram for continuity testing of wiring in the charging system.

## Alternator, overhaul—Operation N1-27

Workshop hand tools:
Spanner sizes: $\frac{5}{16}$ in. AF, $\frac{3}{8}$ in. AF, $\frac{11}{16}$ in. AF
Screwdriver (electrician's)
Screwdriver (large)
Pliers (long-nosed)

Special tools:
Hand press
Soldering iron
Ohm meter, Ammeter
Mains AC supply
15 watt 110 volt bulb
1.5 watt 12 volt bulb

*For alternator removal, see Section A*

### Cleaning

Maintain the alternator free from dirt and oil that may collect, particularly around the slip-ring end cover vents.

### Lubrication

The bearings are packed with grease during assembly and do not require periodic attention.

### Terminal connections

Ensure that all terminal connections are clean and tight.

### Alternator, strip

1. Remove the nut and spring washer from the rotor shaft. Withdraw the pulley and fan.
2. Scribe the drive end bracket, lamination pack and slip ring end bracket so that they can be re-assembled in correct angular relation to each other.
3. Remove the three through bolts and washers. Withdraw the drive end bracket and rotor as an assembly from the stator.
4. Remove the Woodruff key and bearing collar. Press out the rotor shaft from the drive end bracket.

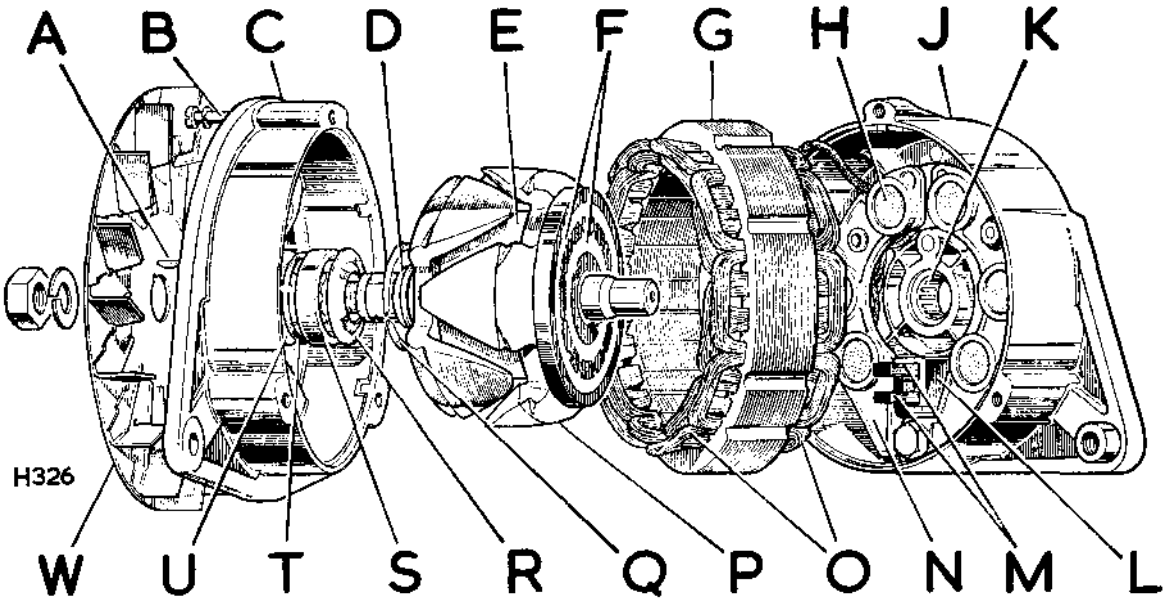


**Fig. N1-72. Alternator model 11AC dismantled**

A—Woodruff key
B—Through bolt (3)
C—Drive end bracket
D—Jump ring shroud
E—Rotor (field) winding
F—Slip rings
G—Stator laminations
H—Silicon diodes (6)
J—Slip ring end bracket
K—Needle roller bearing
L—Brush box
M—Brushes (2)
N—Diode heat sink (2)
O—Stator winding
P—Rotor
Q—Circlip
R—Bearing retaining plate
S—Ball bearing, drive end
T—'O' ring
U—'O' ring retaining washer
W—Fan

## Operation N1-27—*continued*

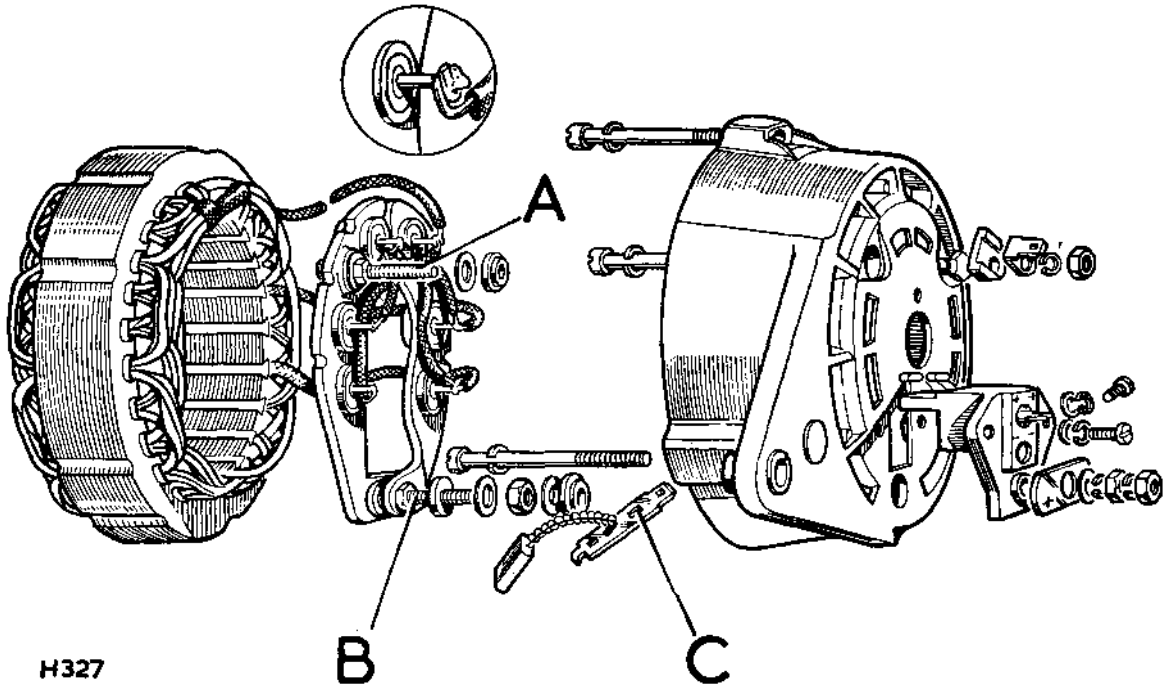


**Fig. N1-73. Slip ring end, showing heat sinks withdrawn**

A—Warning light terminal 'AL' B—Output terminal C—Terminal block retaining tongue

5. Remove the circlip from the drive end bracket and remove the retaining plate. Press out the ball bearing and remove the 'O' ring and retaining washer.
6. Remove the nut, spring washer, 35 amp Lucar blade and plastic strip from the output terminal. Remove the locknut and washer. Remove the two securing screws and washers and withdraw the brush box, noting the two small insulating washers between the brush box and end bracket
7. Close up the retaining tongue at the root of each field terminal blade. Withdraw the brush spring and terminal assemblies from the brush box.
8. Remove the nut and washer from the warning light 'AL' terminal. Lift off the 17½ amp Lucar blade and the insulation bush.
9. Remove the bolt and washer securing the slip ring end bracket to the heat sinks. Withdraw the stator and heat sinks from the end bracket, noting the insulating and plain washers on the 'AL' and output terminal posts.
10. Note the connections of the wires to the diodes, and unsolder the wires, using a pair of long-nosed pliers as a thermal shunt, as in the illustration Great care must be taken to avoid overheating the diodes, or bending the diode pins and the operation should be done as quickly as possible. Remove the nut securing the heat sinks together, and separate the heat sinks, noting the insulation washers.

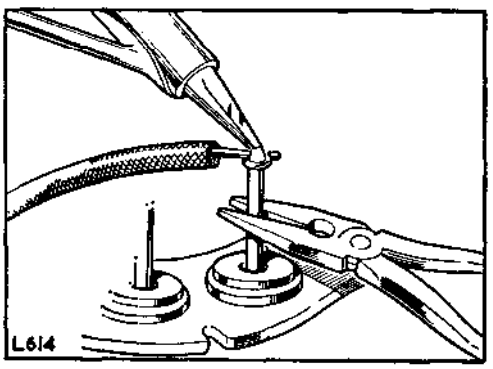


**Fig. N1-74. Use of thermal shunt when soldering diode connections**

## Operation N1-27—*continued*

### Inspection and testing of alternator parts

**Brushgear**

1. Measure the brush length. A new brush is $\frac{5}{8}$ in. (15,9 mm) long; a fully worn brush is $\frac{5}{32}$ in. (4 mm) long, and must be replaced at, or approaching, this length. Brush spring pressures can be checked against the specifications in the technical data.

   Check that the brushes move freely in their holders. Clean the brushes with a petrol-moistened cloth, and lightly polish the brush sides with a smooth file if necessary.

   **Note:** The brush which bears on the inner slip ring is the positive brush, as the lower linear speed results in reduced mechanical wear and helps to offset the higher rate of electrical wear peculiar to the positive connected brush.

2. **Slip-rings.** The surfaces of the slip rings should be smooth and free from oil. Clean the surfaces with a petrol-moistened cloth, or very fine glass paper if there is evidence of burning. No attempt should be made to machine the slip-rings, as any eccentricity will adversely affect the high speed performance of the alternator.

3. **Rotor.** Test the rotor winding by connecting an ohm meter between the slip rings. The resistance reading should be 3.8 ohms at 68°F.

   An alternative test can be made using a 12 volt battery and large-scale ammeter in series with the winding. The ammeter reading should be approximately 3.2 amperes.

   Test the slip ring/rotor winding insulation by using an AC mains supply and a test lamp in series with a slip-ring and rotor pole. If the lamp lights, the insulation is faulty and the rotor must be replaced.

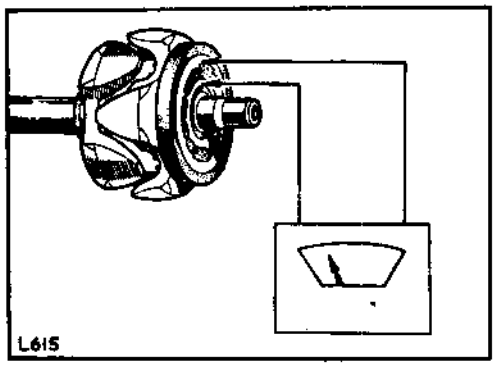


**Fig. N1-75. Measuring rotor winding resistance with ohm meter (alternator dismantled)**

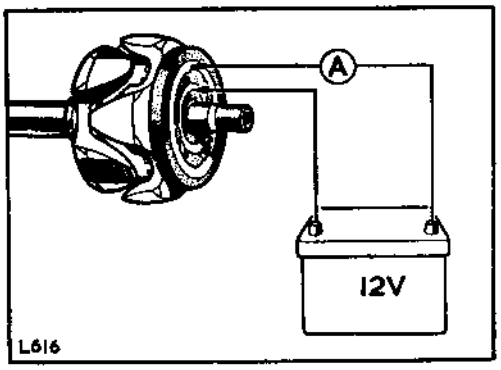


**Fig. N1-76. Measuring rotor winding resistance with battery and ammeter (alternator dismantled)**

No attempt should be made to machine the rotor poles or true a distorted shaft.

4. **Stator.** Check the continuity of the stator windings with the stator cables separated from the heat sinks. Connect any two of the three stator cables in series with a 1.5 watt test lamp and a 12 volt battery. Repeat the test, replacing one of the two cables by the third cable. Failure of the test lamp to light on either occasion means that part of the stator winding is open-circuit, and the stator must be replaced.

   Test the insulation between the stator coils and lamination pack with an AC mains supply and a bulb in series with any one of the three cable ends and the lamination pack. If the bulb lights, the stator coils are earthing and the stator must be replaced.

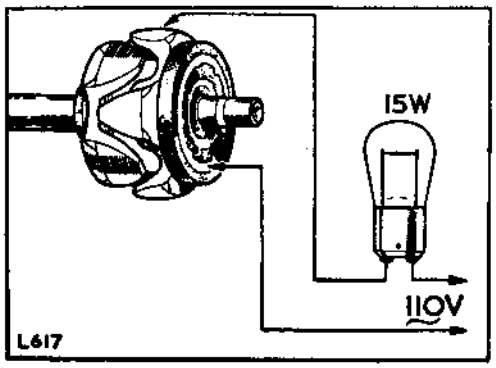


**Fig. N1-77. Insulation test of rotor winding**

## Operation N1-27—*continued*

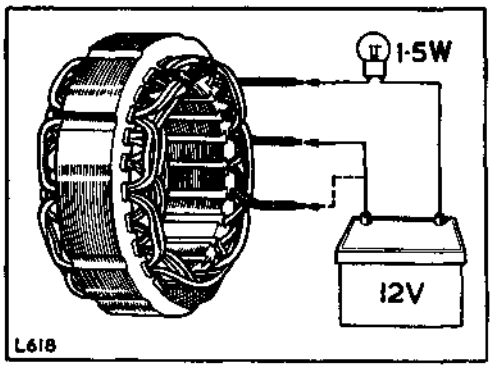


Fig. N1-78. Stator winding continuity test

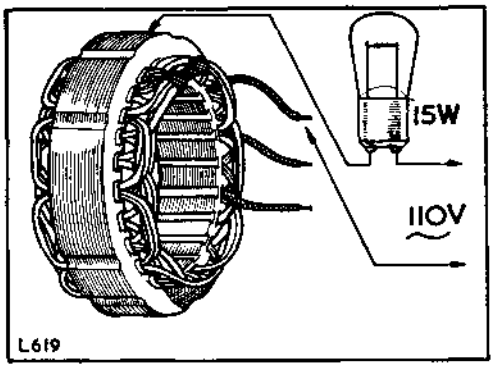


Fig. N1-79. Stator winding insulation test

### Heat sinks and diodes

There are two heat sink assemblies, one of positive polarity and the other negative. Each carries three diodes that are pressed into position. The diodes are not individually replaceable, and if a diode is found defective the heat sink must be replaced.

The diodes can be tested for service purposes with the stator wires separated from the heat sinks. Connect a 12 volt battery and 1.5 watt bulb in series with each diode, and reverse the connections. Current should flow, and the bulb light up, in one direction only. If the bulb lights up in both directions, or does not light up in either, the diode is defective and the heat sink assembly must be replaced.

Accurate measurement of diode resistance requires factory equipment. Since the forward resistance of a diode varies with the voltage applied, no realistic readings can be obtained with battery-powered ohm meters. If a battery ohm meter is used, a good diode will yield infinity in one direction, and some indefinite but much lower reading in the other.

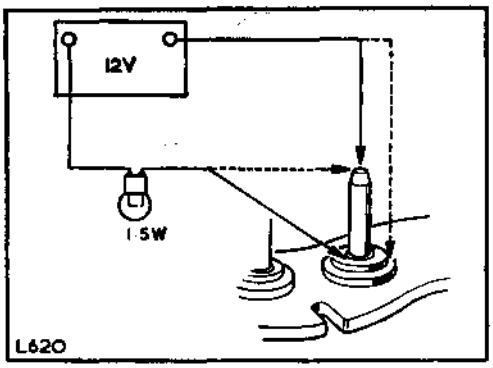


Fig. N1-80. Service test of diodes

**WARNING:** Ohm meters of the type incorporating a hand-driven generator must never be used for checking diodes.

**Bearings.** Bearings that are worn to the extent that they allow excessive side movement of the rotor shaft must be renewed. The needle roller bearing in the slip-ring end bracket is not serviced separately, and in the unlikely event that it becomes unserviceable the end bracket must be replaced.

### Alternator, assemble

1. Resolder the stator wires to the diodes using M grade 45–55 tin/lead solder. A pair of long-nosed pliers should be used as a thermal shunt, and care must be taken to avoid overheating the diodes or bending the diode pins. Soldering must be carried out as quickly as possible.

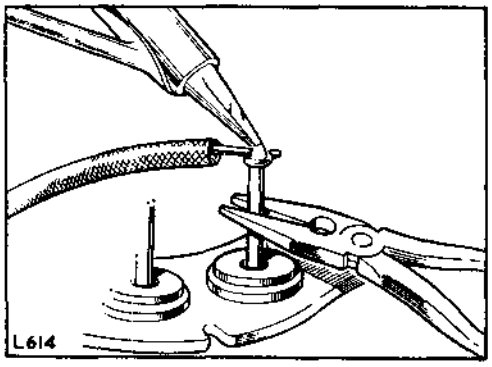


Fig. N1-81. Use of thermal shunt when soldering diode connections

## Operation N1-27—*continued*

2. After soldering, the connections must be neatly arranged around the heat sinks to ensure adequate clearance for the rotor, and tacked down with 3 M EC 1022 adhesive where indicated in the illustration. The stator connections must pass through the appropriate notches at the edge of the heat sink.

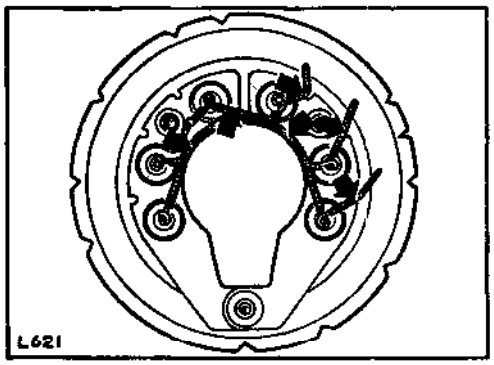


**Fig. N1-82. Heat sink cable securing points**

3. Assembly is the reverse of the stripping procedure, observing the torque values given in the Data section. Note the order of the insulation washers between the heat sinks—thick plain washer, thin plain washer and small plain washer.
4. Refit the plain and insulating washers to the 'AL' and output terminal posts before fitting the stator to the slip-ring end bracket.
5. Fit the two small insulating washers under the brush box.
6. To ensure the Lucar terminals of the brushes are properly retained the tongue should be levered up with a fine screwdriver to make an angle of 30° with the terminal blade.
7. Support the inner journal of the drive end bearing when pressing in the rotor shaft. Do not use the bracket as a support for the bearing while fitting the rotor shaft.
8. Align the drive end bracket, lamination pack and slip-ring bracket, and tighten the three bolts evenly. Check that the rotor is quite free in its bearing.

## Fault diagnosis—Electrical equipment

| Symptom | Possible cause | Investigation | Remedy |
|---|---|---|---|
| **A—Battery discharged** | Incorrect fan belt tension | Check for loose fan belt | Reset as necessary, Section A |
| | Battery connections faulty | Check for loose and corroded terminal connections | Clean and tighten as necessary |
| | Battery unserviceable | Check battery condition | Replace as necessary |
| | Dynamo faults | Check terminal connections for looseness and corrosion | Clean and tighten as necessary |
| | | Check dynamo function | Rectify or replace as necessary |
| | Voltage regulator faulty | Check regulator and settings | Rectify or replace as necessary |
| | Faulty circuits | Check horn, ammeter, inspection light and interior light circuits | Rectify or replace as necessary |
| **B—Dynamo output too low** | Slipping fan belt | Check fan belt tension setting, Section A | Reset as necessary |
| | Dynamo faults | Check for dynamo loose on mountings | Tighten fixings, Section A |
| | | Check brushes for excessive wear | Replace as necessary |
| | | Check commutator for burning and undue wear | Reclaim surface by skimming |
| | | Check commutator for glazing | Clean surface, using fine grade abrasive cloth |
| | | Dismantle dynamo and check for internal circuit faults | Rectify or replace as necessary |
| | Circuit faults | Check circuit, referring to appropriate circuit diagram | |
| | Voltage regulator faulty | Check regulator and settings and earth | Rectify or replace as necessary |
| **C—Lamps dim at low engine speed** | Faulty earth connection | Check earthing points of lamps affected and battery | Rectify as necessary |
| | Battery in low state of charge | Check and remedy as described in paragraph A | |
| **D—Bulbs fail frequently** | Battery in low state of charge | Check and remedy as described in paragraph A | |
| | Voltage regulator faulty | Check regulator and settings | Rectify or replace as necessary |
| | Loose connections | Check connections in lamps circuit | Clean and tighten as necessary |
| | Incorrect lamp bulb type | Refer to bulb chart | Fit correct type |
| **E—Horn failure** | Faulty connections | Check for loose and dirty connections | Clean and tighten as necessary |
| | Faulty contact points | Check for burnt or loose contacts | Clean where accessible and adjust as necessary |
| **F—Instrument panel lights fail** | | Refer to Section P | |

## Fault diagnosis—Electrical equipment—*continued*

| Symptom | Possible cause | Investigation | Remedy |
|---|---|---|---|
| **G (a)—Starter motor fails to turn engine (all models)** | Stiff engine | Check by turning engine using starting handle | Locate cause and rectify |
| | Battery in low state of charge | Check by starting engine manually (Petrol models) or substitute a serviceable battery | Recharge battery by period of daylight running or from independent supply |
| **G (b)—Starter motor fails to turn engine Petrol models** | Faulty connections in starter circuit | Check for loose, broken or dirty connections at battery, starter and starter switch. Check cables for damage | Rectify as required. Replace damaged cables |
| | Starter motor faults | Check for greasy, burnt or glazed commutator | Clean or replace as necessary. Skim surface where applicable |
| | | Check brushes for wear, incorrect type and fitting. Check also for sticking in holders and incorrect tensioning | Rectify or replace as necessary |
| | | Check for starter pinion jammed in mesh with flywheel | Rotate squared end of starter shaft to free pinion, using suitable spanner |
| **G (c)—Starter motor fails to operate Diesel models** | Batteries discharged | Check state of charge | Recharge batteries |
| | Starter/heater switch fault | Check for loose wiring at switch | Clean and tighten |
| | | Check switch operation | Replace switch as necessary |
| | Starter solenoid faulty | Check for loose wiring | Tighten as necessary |
| | | Check for faulty earth connection | Clean and remake connection |
| | | Check solenoid operation | Replace as necessary |
| | Starter motor faulty | Check for worn brushes and fatigued springs | Replace as necessary |
| | | Check for greasy, burnt or unevenly worn commutator | Clean, using petrol-moistened cloth. Skim surface, where applicable |
| | | Dismantle unit and check for internal fault in circuit | Rectify or replace as necessary |
| **H—Starter operates but does not turn engine** | Starter motor fault | Petrol models — Check for starter drive pinion not engaging with flywheel | Clean screwed sleeve and mating parts |
| | | Diesel models — Plate clutch pinion faulty | Rectify or replace as necessary |
| **J—Starter pinion will not disengage from flywheel** | Starter motor fault | Petrol models — Check for starter pinion jammed in mesh with flywheel | Rotate squared end of armature shaft until pinion is free. Do not run engine with pinion jammed |
| | | Diesel models — Check for broken return spring in starter | Replace spring |

## Fault diagnosis—Electrical equipment—*continued*

| Symptom | Possible cause | Investigation | Remedy |
|---|---|---|---|
| **K—Engine will not fire—Petrol models** | Sparking plugs faulty or electrical feed earthing | Check for oily and dirty plugs and for moisture on connections. Check plug gap. Examine plugs for damage to insulation | Clean and reset plug gap. Replace plugs with defective insulation. Dry off all moisture |
| | Contact breaker faults | Check for dirty and pitted contacts. Check gap | Clean and stone contact pads or replace as necessary. Reset gap to .014 in. to .016 in. (0,35 mm to 0,40 mm) |
| | Fault in low tension circuit, indicated by no spark occurring between the distributor contact breaker points when separated quickly with ignition 'ON' | Check circuit between battery, coil, distributor, contact breaker and condenser to earth | Examine all ignition cables for damage, ensure sound connections. Check battery terminals, clean and tighten as necessary Replace components as necessary |
| | Coil or distributor faulty | Remove the lead from the distributor centre terminal and hold the lead end ¼ in. (6 mm) approximately from a suitable metal part of the engine whilst the engine is rotating. If sparks cross the gap regularly, the coil and distributor are functioning satisfactorily | Replace defective components. Ensure that connections from distributor centre lead through carbon brush, rotor arm, distributor segments and plug leads are clean and sound |
| **L—Engine misfires—Petrol models** | Contact breaker or condenser faults | Check contact breaker as in paragraph K. Check condenser | Replace components as necessary |
| | Sparking plug faults | Check sparking plugs as in paragraph K | |
| | Refer to fault diagnosis in Section A | | |
| **M—Engine fails to start from cold—Diesel models** | Heater plug fault | Check heater plug circuit | Rectify as necessary |
| **N—Ignition defects—Petrol models** | Distributor operation defective. Before commencing investigation, ensure that the ignition timing is correct, Section A refers. Refer also to the ignition system checks described in paragraph K | Check contact breaker points for burning and pitting. Check contact breaker gap | Clean and stone contact pads or replace as necessary. Reset gap |
| | | Check for cracked distributor cap | Replace cap |
| | | Check condenser by substituting a serviceable component | Replace condenser as necessary |
| | | Check rotor arm for pitting and burning | Clean or replace as applicable |
| | | Check for weak or broken contact breaker spring | Replace spring as necessary |
| | | Check for excessive play due to wear in shaft bushes | Replace as necessary |

## Fault diagnosis—Electrical equipment—*continued*

| Symptom | Possible cause | Investigation | Remedy |
|---|---|---|---|
| **P—Mixture control warning light fails to glow—engine hot—control pulled out—Petrol models** | Electrical circuit defect | Check for broken connections in warning light circuit | Rectify as necessary |
| | | Check for unserviceable warning lamp bulb | Replace as necessary |
| | Thermostat switch defect | Check switch at cylinder head by substituting a serviceable switch | Replace as necessary |
| | Mixture control defects | Check for faulty manual switch at mixture control | Replace as necessary |
| | | Check for damaged or broken operating mechanism at switch | Rectify or replace as necessary |
| **Q—Mixture control warning light remains on, engine at running temperature—Petrol models** | Mixture control out | Check if manual switch is only partially in | Push control fully in at dash |
| | Manual switch faulty | Check switch function. Check also for damaged operating mechanism | Replace as necessary |
| **R—Starter operation noisy** | Starter loose on mounting | Check fixings at flywheel housing | Tighten as necessary |
| | Damage to starter or flywheel | Check for starter pinion or flywheel gears chipped or otherwise damaged | Replace as necessary |
| | | Remove armature shaft and examine for bearing wear | Replace as necessary |
| **S—Dynamo operation noisy** | Dynamo loose on mounting | Check for loose fixings at dynamo and mounting bracket, where applicable | Tighten as necessary |
| | Dynamo out of alignment with fan belt | Visually check alignment | Adjust position at dynamo mounting |
| | Dynamo pulley defect | Check for cracked or damaged pulley | Replace as necessary |
| | Dynamo internal defect | Check for worn, damaged or defective bearings | Replace as necessary |
| | Excessive brush noise | Check for rough or dirty commutator, badly seating brushes, insulation between segments requiring cut-back, incorrect brush spring tension, loose brushes and loose field magnets | Rectify or replace as applicable |

## DATA

### System

| | |
|---|---|
| 2¼ litre Petrol and Diesel models up to vehicle suffix 'C' inclusive | POSITIVE EARTH |
| 2¼ litre Petrol and Diesel models from suffix 'D' onwards and all 2.6 litre models | NEGATIVE EARTH |

### Battery

| | |
|---|---|
| Petrol models—capacity | Single 12 volt, 58 AH |
| Diesel models—capacity | Two 6 volt, series connected; 120 AH |

### Starter motor

| | |
|---|---|
| Petrol models: | |
| Nominal voltage | 12 |
| Starting shaft end float | Zero |
| Diesel models: | |
| Nominal voltage | 12 |
| Starting shaft end float | Zero |
| Lock torque | 26 lb ft (3,5 mkg) |
| Torque at 1,000 rpm | 15 lb ft (2 mkg) |

### Starter motor drive

| | |
|---|---|
| Petrol models | Spring loaded pinion and sleeve |
| Diesel models slip load | Multi-plate clutch 800 to 950 lb/in. (142 to 169 kg/cm |

### Dynamo

| | |
|---|---|
| Petrol models, Series II: | |
| Type | C 39/PV 2 |
| Maximum output | 19 amps |
| 2¼ litre Petrol and Diesel models, Series IIA: | |
| Type | C 40/1 |
| Maximum output | 22 amps |
| 2.6 litre Petrol models: | |
| Type | C 42 |
| Maximum output | 30 amps |

### Control box

| | |
|---|---|
| 2¼ litre Petrol models, Series II: | |
| Type | RB 106/37182 |
| 2¼ litre Petrol models, Series IIA: | |
| Type | RB 106/37290 |
| 2.6 litre Petrol models: | |
| Type | RB 340/37517 |
| 2¼ litre Diesel models, Series II and IIA up to vehicle suffix 'C' inclusive | |
| Type | RB 310/37472 |
| 2¼ litre Diesel models, Series IIA from vehicle suffix 'D' onwards: | |
| Type | RB 340/37387 |

**Distributor, Petrol models**

| | |
|---|---|
| Contact breaker gap | .014 in to .016 in. (0,35 mm to 0,40 mm) |
| Distributor rotation | Clockwise, at drive end |
| Advance mechanism | Centrifugal/vacuum |

**Fuses**

| | |
|---|---|
| Quantity | Two |
| Amperage | 35 |
| Protecting | |
| A1–A2 | Interior lamps, fog lamps, etc., as applicable |
| A3–A4 | Windscreen wiper, fuel tank level unit and stop lights |

**Heater plugs, Diesel models**

| | |
|---|---|
| Type | Coil element 1–7 volts, 38–42 amps<br>KLG G.F. 210/T or Champion AG 45 |

**Stop lamp switch**

| | |
|---|---|
| Early models | Hydraulic |
| Latest models | Mechanical |

**Mixture control thermostat switch, Petrol models**

| | |
|---|---|
| Contact made at | 51 to 54°C (124 to 129°F) |
| Contact broken at | 47 to 53°C (117 to 127°F) |

**Alternator**

| | |
|---|---|
| Type | Lucas 11AC |
| Nominal voltage | 12 volts |
| Nominal direct current output | 43 amperes |
| Resistance of field coil at 68°F (20°C) | 3.8 ohms |
| Maximum rotor speed | 12,500 rpm |
| Stator phases | 3 |
| Stator connection | Star |
| Number of rotor poles | 8 |
| Number of field coils | 1 |
| Slip-ring brushes length: | |
| New | $\frac{5}{8}$ in. (15,9 mm) |
| Replace at | $\frac{5}{32}$ in. (4 mm) |
| Brush spring tension: | |
| Load at $\frac{25}{32}$ in. (19,9 mm) | 4 to 5 oz (113 to 142 grms) |
| Load at $\frac{13}{32}$ in. (10,3 mm) | 7.5 to 8.5 oz (212 to 241 grms) |
| Assembly torques, maximum: | |
| Brushbox fixing screws | 10 lb in. (0,115 mkg) |
| Diode heat sink fixings | 25 lb in. (0,288 mkg) |
| Through bolts | 45 to 50 lb in. (0,518 to 0,576 mkg) |

**Alternator field isolating relay**

| | |
|---|---|
| Nominal voltage | 12 volts |
| Cut-in voltage | 6.0 to 7.5 volts |
| Drop-off voltage | 4.0 volts minimum |
| Resistance of operating winding | 76 ohms |

**Alternator warning light control**

| | |
|---|---|
| Resistance of actuator wire and internal ballast resistor (terminals AL and E) | 14 to 16 ohms |
| Warning light bulb | 2.2 watts 12 volts, MES cap |

# SECTION P—INSTRUMENTS AND CONTROLS

# INDEX—INSTRUMENTS AND CONTROLS

**Note:** A comprehensive, detailed index is included at the end of this manual


| Description | Operation Number |
|---|---|
| **Layout of instruments and controls** | At beginning of Section |
| Accelerator controls | 3 |
| Cut-off control, Diesel models | 5 |
| Instruments and switches | 1–1A |
| Mixture control, Petrol models | 4 |
| Speedometer drive cable | 2 |
| **For details of the following items, refer to their respective sections:** | |
| Clutch pedal | Section B |
| Gearbox controls | Section C |
| Steering wheel | Section G |
| Brake pedal | Section H |
| Windscreen wiper | Section N |
| Direction indicator switch | Section N |
| Horn push | Sections G & N |
| Windscreen ventilator | Section Q |
| **Fault Diagnosis** | At end of Section |

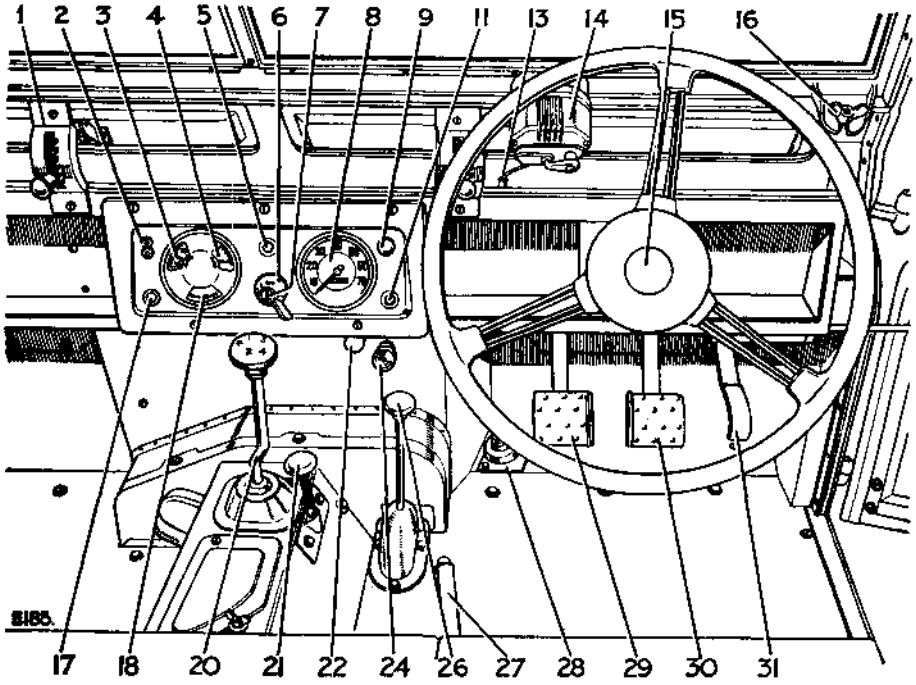


**Fig. P1-1. Layout of instruments and controls, early Series II and IIA Petrol models**

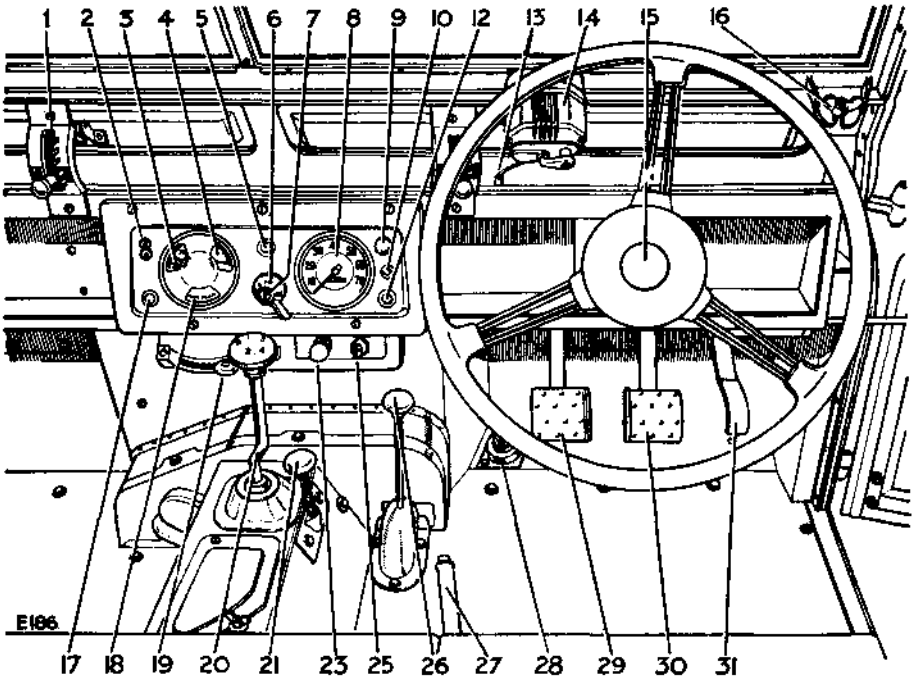


**Fig. P1-2. Layout of instruments and controls, early Series II and IIA Diesel models**

**Key to instruments and controls**

1 Windscreen ventilator
2 Lead lamp socket
3 Ammeter
4 Fuel level gauge
5 Oil pressure warning light
6 Lamp switch
7 Electrical services or ignition switch
8 Speedometer
9 Instrument panel light switch
10 Fuel tank warning light (Diesel)
11 Cold start control warning light (Petrol)
12 Heater plug warning light (Diesel)
13 Wiper lead plug
14 Windscreen wiper
15 Horn button
16 Wingnut securing windscreen
17 Charging warning light
18 Headlamp warning light
19 Engine hand speed control (Diesel)
20 Main gear change lever
21 Front wheel drive control
22 Cold start control (Petrol)
23 Engine stop control (Diesel)
24 Starter switch (Petrol)
25 Switch for starter and heater plugs (Diesel)
26 Transfer box lever
27 Hand brake
28 Headlamp dipper switch
29 Clutch pedal
30 Brake pedal
31 Accelerator pedal

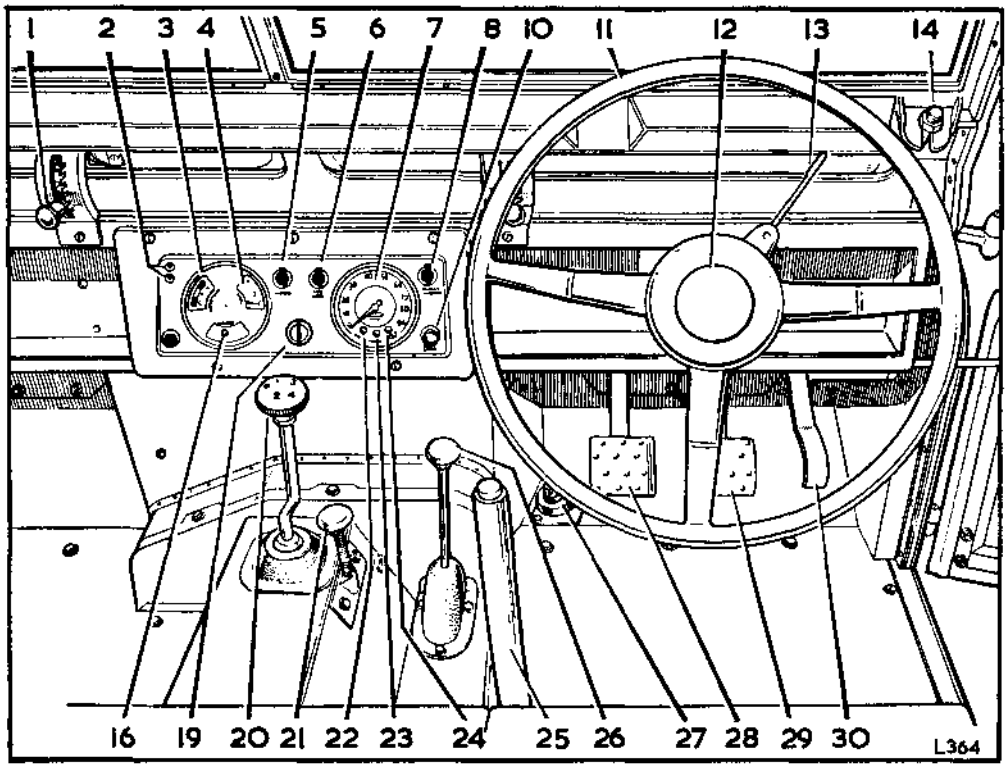


**Fig. P1-3. Layout of instruments and controls, latest Series IIA Petrol models**

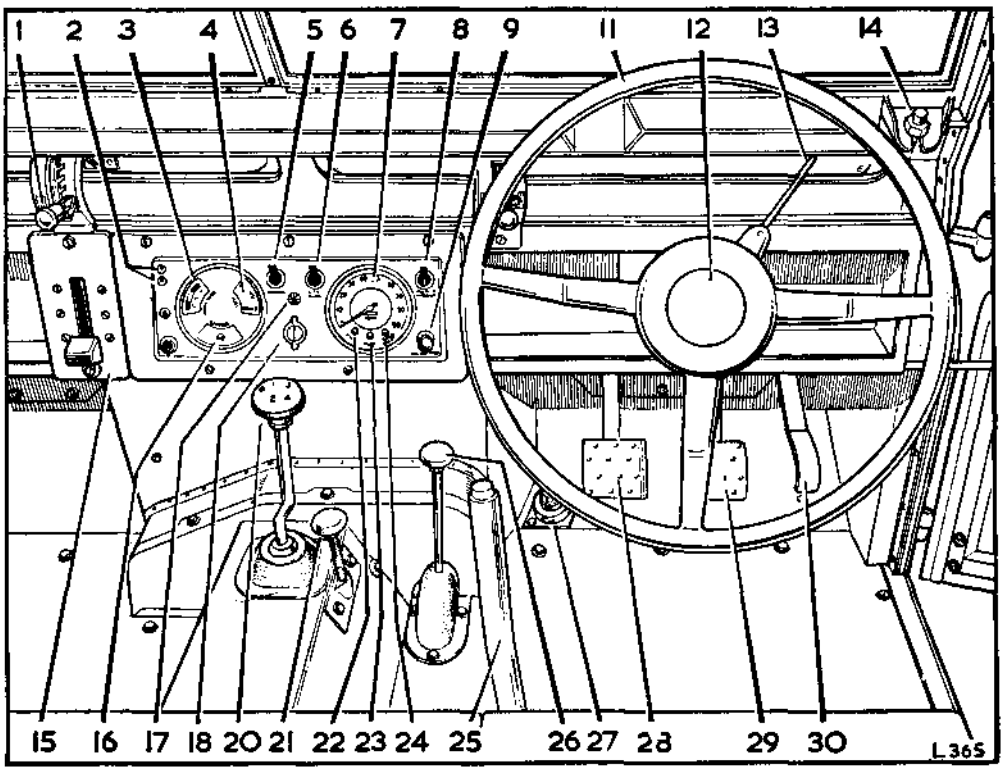


**Fig. P1-4. Layout of instruments and controls, latest Series IIA Diesel models**

**Key to instruments and controls**

1 Windscreen ventilator
2 Inspection lamp sockets
3 Water temperature indicator
4 Fuel level indicator
5 Windscreen wiper switch
6 Main light switch
7 Speedometer
8 Panel and interior light switch
9 Engine stop control, Diesel models
10 Cold start control, Petrol models
11 Steering wheel
12 Horn button
13 Direction indicator switch
14 Nut securing windscreen
15 Engine hand speed control, Diesel models
16 Charging warning light
17 Fuel tank level warning light, Diesel models
18 Heater plug and starter switch, Diesel models
19 Ignition and starter switch, Petrol models
20 Main gear change lever (black knob)
21 Four-wheel drive control (yellow knob)
22 Oil pressure warning light
23 Main beam warning light
24 Cold start warning light
25 Hand brake
26 Transfer gear lever (red knob)
27 Headlamp dipper switch
28 Clutch pedal
29 Brake pedal
30 Accelerator pedal

## Instruments and switches, POSITIVE EARTH SYSTEM, Series II and IIA models up to vehicle suffix 'C' inclusive, remove and refit—Operation P1-1

Workshop hand tools:

Spanner size: 2 BA

Screwdrivers (medium and small)

### To remove

1. Disconnect the battery.

   **Diesel**—disconnect the positive lead of RH battery.

2. Remove the panel from the dash.
3. Disconnect the speedometer drive cable.
4. Remove the panel light bulb and holder from the speedometer. If necessary, unscrew the bulb from its holder.
5. Remove the speedometer retaining bracket (this action will also release an earth wire) and withdraw the speedometer.
6. Disconnect the wiring from the panel light switch.
7. Unscrew the knob and securing nut from the switch and remove the panel light switch from the panel.
8. Disconnect the wires from the mixture or heater plug warning light.
9. Compress the retaining spring, remove the circlip and withdraw the mixture or heater plug warning light. If necessary, unscrew the bezel from the warning light bakelite holder and withdraw the bulb.
10. Disconnect the wires from the dynamo warning light.
11. Compress the retaining spring, remove the circlip and withdraw the dynamo warning light. If necessary, unscrew the bezel from the warning light bakelite holder and withdraw the bulb.
12. **Diesel**—disconnect the wires from the fuel level warning light, unscrew the lens from the front of instrument panel and withdraw the unit. The bulb may be removed if necessary by easing the smaller diameter of the lamp body from the larger section.

    **Diesel**—fuel level warning lamp bulb replacement can only be effected by removing the instrument panel.

13. Disconnect the wires from the ignition or auxiliary services and lamp switch.
14. Release the retaining clip and withdraw the ignition or auxiliary services and lamp switch complete.
15. Withdraw the headlamp main beam warning light bulb and holder from the multiple gauge unit. If necessary, unscrew the bulb from its holder.
16. Disconnect the wiring to the ammeter and fuel gauge and withdraw the multiple gauge illumination bulb and holder. If necessary, unscrew the bulb from its holder.
17. Remove the multiple gauge from the panel (this action will also release two earthing wires). The sections of the gauge can be removed separately.
18. Disconnect the wires from the two inspection lamp sockets and withdraw the sockets.
19. Disconnect the wires from the oil pressure warning light.
20. Compress the retaining spring, remove the circlip and withdraw the oil pressure warning light. If necessary, unscrew the bulb from its holder.

### To refit

Reverse the removal procedure, connecting the wiring in accordance with the appropriate wiring diagram, Section N. Replacement bulbs are listed in Section N.

**Note:** Care should be taken when re-connecting the lamp switch wiring on North American vehicles, as it is so arranged that the sidelamps are extinguished when the headlamps are switched on.

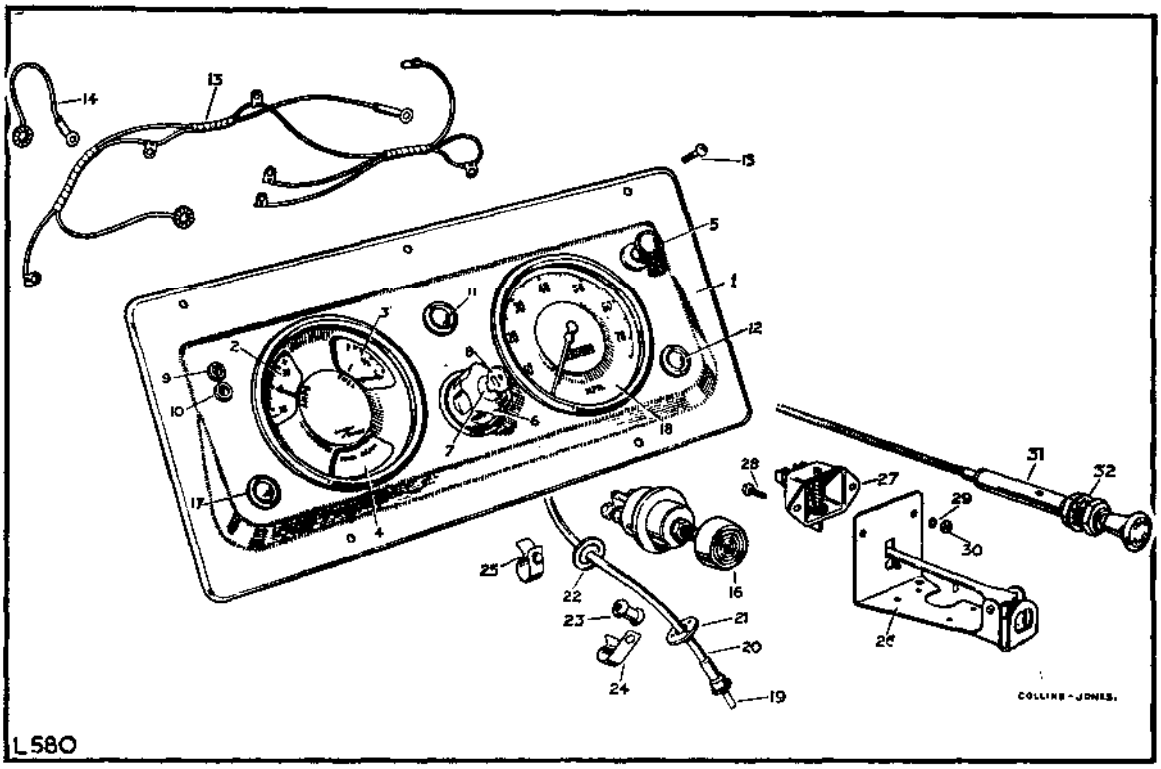


**Fig. P1-5. Instruments, POSITIVE EARTH SYSTEM, Series II and IIA models. Up to vehicle suffix 'C' inclusive**

| | | | | |
|---|---|---|---|---|
| 1 | Instrument panel | 16 | Starter switch, Petrol models | |
| 2 | Ammeter | 17 | Warning light, oil* | |
| 3 | Fuel gauge | 18 | Speedometer | |
| 4 | Warning light for headlamp beam | 19 | Cable, inner | |
| 5 | Switch for panel lights | 20 | Cable, outer | |
| 6 | Switch for lamps | 21 | Retaining plate for cable | |
| 7 | Barrel lock for ignition or electrical services | 22 | Rubber grommet, in dash | For speedometer cable |
| 8 | Key for lock | 23 | Rubber grommet, on cable | For speedometer cable |
| 9 | Socket for inspection lamp, black | 24 | Clip | For speedometer cable |
| 10 | Socket for inspection lamp, red | 25 | Clip | For speedometer cable |
| 11 | Warning light, dynamo* | 26 | Bracket for mixture control | Petrol models |
| 12 | Warning light, mixture or heater plugs | 27 | Switch for mixture warning light | Petrol models |
| 13 | Panel harness | 28–30 | Fixings for switch | Petrol models |
| 14 | Lead, ammeter to inspection socket | 31 | Mixture control complete | Petrol models |
| 15 | Fixings for instrument panel | 32 | Shakeproof washer for control | Petrol models |

*From late Series II vehicles onwards the position of oil warning light and charging warning light has been interchanged.

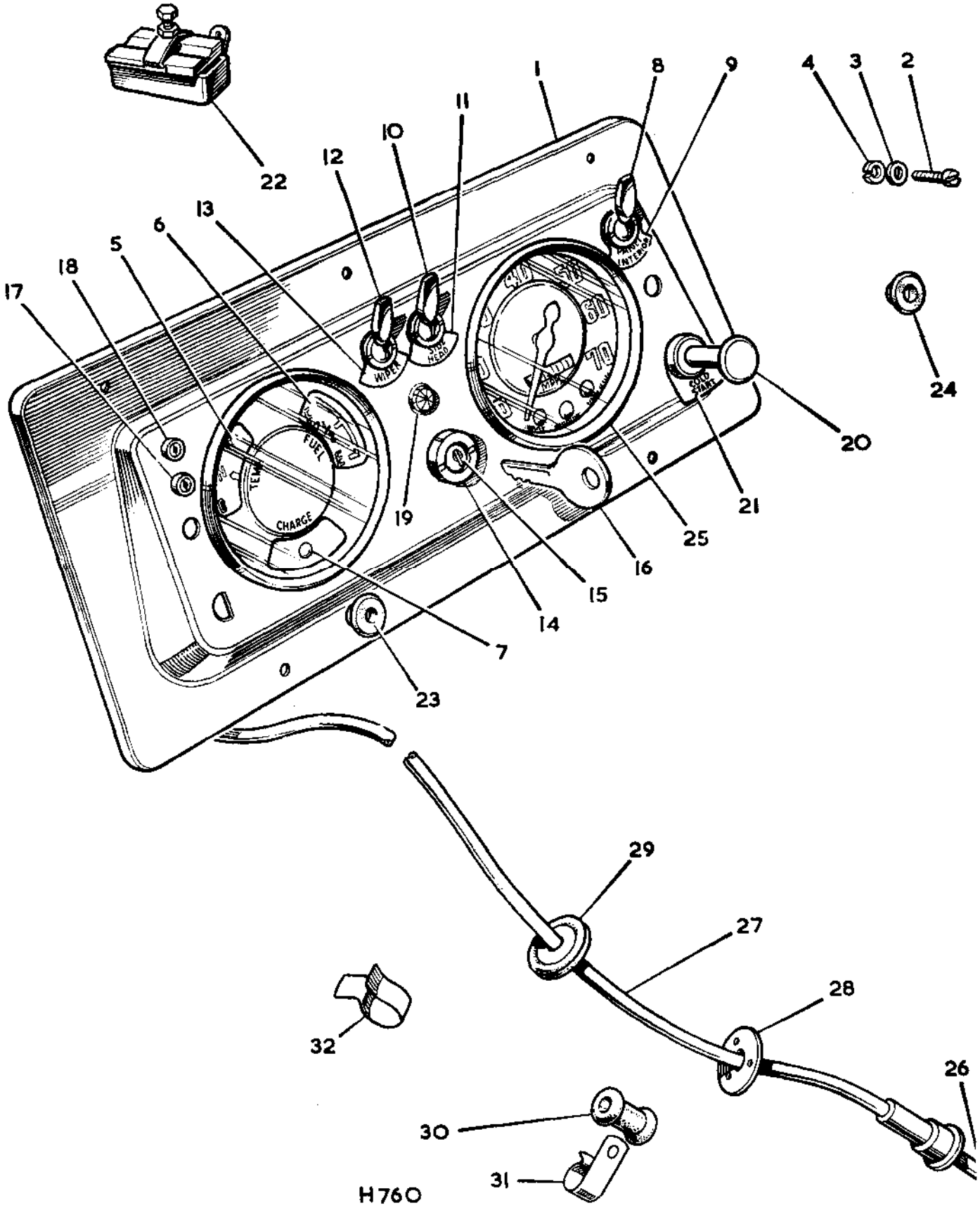


Fig. P1-6. Instruments, NEGATIVE EARTH SYSTEM, Series IIA models. From vehicle suffix 'D' onwards

**Key to illustration of instruments, negative earth, Series II models from vehicle suffix 'D' onwards**

1 Instrument panel
2 Set screw (2 BA x $\frac{3}{8}$ in. long) } Fixing instrument panel
3 Plain washer } Fixing instrument panel
4 Spring washer } Fixing instrument panel
5 Water temperature gauge
6 Fuel gauge
7 Warning light, charging, red
8 Switch for panel and interior lights
9 Nameplate for switch 'PANEL/INTERIOR'
10 Switch for lamps
11 Nameplate for switch, 'SIDE/HEAD'
12 Switch for wiper motor
13 Nameplate for switch, 'WIPER'
14 Switch for ignition and starter
15 Barrel lock for ignition switch
16 Key for lock
17 Socket for inspection lamp, black
18 Socket for inspection lamp, red
19 Warning light, fuel
20 Cold start control complete
21 Name plate for control, 'COLD START'
22 Switch for cold start warning light
23 Plug, large } For redundant holes in panel
24 Plug, small } For redundant holes in panel
25 Speedometer and warning lights, mile
26 Cable, inner
27 Cable, outer
28 Retaining plate for cable
29 Rubber grommet, in dash } For speedometer cable
30 Rubber grommet, on cable } For speedometer cable
31 Clip } For speedometer cable
32 Clip } For speedometer cable

## Instruments and switches, NEGATIVE EARTH SYSTEM, Series II and IIA models from vehicle suffix 'D' onwards, remove and refit—Operation P1-1A

Workshop hand tools:
Screwdrivers (medium and small)

### To remove

1. Disconnect the battery earth lead.
2. Remove the panel from the dash.
3. Disconnect the speedometer drive cable.
4. Remove the speedometer, oil pressure, main beam and cold start light bulb holders from the speedometer.
5. Remove the speedometer retaining bracket (this action will also release an earth wire) and withdraw the speedometer.
6. Disconnect the wiring from the panel light switch.
7. Unscrew the special securing nut from the switch and remove the panel light switch from the panel.
8. Disconnect the wires from the mixture or heater plug warning light (where fitted).
9. Compress the retaining spring, remove the circlip and withdraw the mixture or heater plug warning light. If necessary, unscrew the bezel from the warning light bakelite holder and withdraw the bulb.
10. Disconnect the leads from the dynamo warning light, water temperature gauge and fuel gauge.
11. Release the three retaining clips and remove the multiple gauge from the panel (this action will also release two earthing wires). The sections of the gauge can be removed separately.
12. **Diesel**—disconnect the leads from the fuel level warning light and withdraw the light and socket.
13. Disconnect the wires from the ignition or auxiliary services and lamp switch.
14. Release the retaining clip and withdraw the ignition or auxiliary services and lamp switch complete.
15. Disconnect the leads from windscreen wiper switch, unscrew the retaining nut and withdraw the switch.
16. Disconnect the leads from the side/headlamp switch, unscrew the retaining nut and withdraw the switch.
17. Disconnect the wires from the two inspection lamp sockets and withdraw the sockets.
18. Disconnect the leads from the instrument voltage stabiliser, and remove stabiliser from panel.

### To refit

Reverse the removal procedure, connecting the wiring in accordance with the appropriate wiring diagram, Section N. Replacement bulbs are listed in Section N.

**Note:** Care should be taken when re-connecting the lamp switch wiring on North American vehicles, as it is so arranged that the side-lamps are extinguished when the head-lamps are switched on.

## Speedometer drive cable, remove and refit—Operation P1-2

*(For removal, refitting and overhaul instructions of the speedometer drive mechanism, Section C refers)*

Workshop hand tools:
Spanner size: 2 BA socket
Screwdriver (medium)

### To remove

1. Disconnect the battery earth lead.
2. Withdraw the instrument panel clear of the dash.
3. Disconnect the speedometer drive from the speedometer head.
4. Free the cable by withdrawing the end from the dash and pushing the three rubber grommets from the securing clips on the flywheel housing, chassis side member and transfer casing.
5. Disconnect the speedometer cable at the gearbox end. (If necessary, remove the centre seat panel).
6. Withdraw the inner cable from the outer casing.

### To refit

1. Thoroughly clean the inner cable and smear suitable grease over its entire length.
2. Insert the cable in the outer casing.
3. Replace the speedometer drive by reversing the removal procedure, care being taken to avoid acute curves. The inner shaft end must be located in the square or slot of the speedometer pinion before the drive is secured to the housing.
4. If the clips holding the securing grommet have been moved, the drive should be correctly positioned before these clips are tightened.

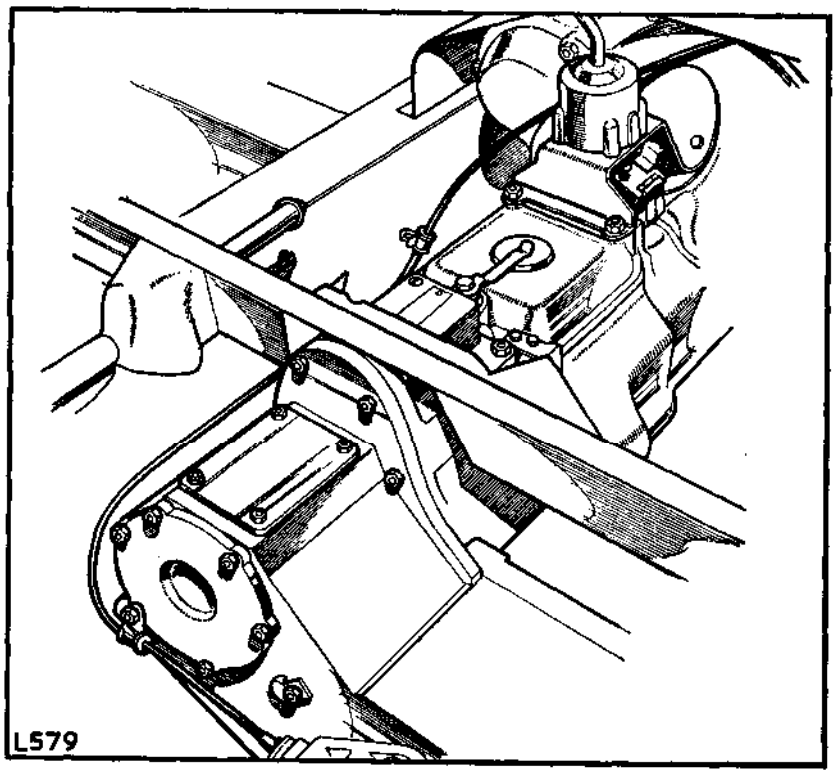


**Fig. P1-7. Correct position of speedometer drive cable**

## Accelerator controls, remove and refit—Operation P1-3

Workshop hand tools:
Spanner sizes: 2 BA, $\frac{7}{16}$ in. AF, $\frac{1}{2}$ in. AF open end
Pliers

### General

The accelerator controls vary between different models, the following instructions are generally applicable but reference should be made to the exploded views and descriptions of accelerator controls for detail variations.

**To remove** (see Figs. P1-9, P1-10, P1-11 and P1-12)

1. Remove the throttle return springs.
2. Detach the control rods from the shaft levers.
3. Loosen the clamping bolt, securing lever on accelarator pedal shaft, then withdraw the lever.
4. Remove the accelerator shaft and pedal stop housing.
5. Detach the pedal shaft support bracket from the toe-box and remove the shaft and pedal complete. On LHStg models, the accelerator pedal, pedal shaft and distance piece may be withdrawn without removing the support bracket.
6. Remove the cross-shaft, bracket(s) and distance washers.
7. If necessary, remove the two levers from the cross-shaft.

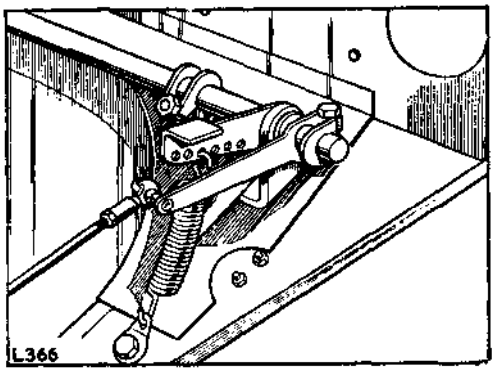


**Fig. P1-8. Accelerator restrictor**

### 88—2¼ litre Petrol only

8. Remove the accelerator restrictor, if fitted.

   On late 88 2¼ litre petrol models an accelerator restrictor is fitted which allows the pedal to be pressed down for three-quarters of its travel with normal pressure, thereafter requiring greater pressure to obtain full throttle.

   This device gives a considerable improvement in fuel consumption, and may be fitted to early 88 2¼ litre petrol models if necessary.

### To refit

1. Reverse the removal procedure. If disturbed, adjust the lengths of the control rods as necessary.

### Hand throttle control—Diesel models

### To remove

1. Disconnect the control rod, quadrant to cross-shaft, at the quadrant ball joint, inside vehicle.
2. Remove the securing bolts, quadrant to scuttle.
3. Remove instrument panel and remove securing bolts, quadrant upper bracket to dash bottom centre panel.
4. Withdraw complete unit.

### To refit

1. Reverse removal procedure.
2. Check for correct functioning and set the hand speed lever as necessary by adjusting the operational lengths of the control rod, quadrant to cross-shaft.

## Mixture control, Petrol models, remove and refit—Operation P1-4

Workshop hand tools:
Spanner sizes: 2 BA, ¼ in. BSF open end
Screwdriver (small)

### To remove

A plunger switch is incorporated in the mixture control; it is wired in series with a bi-metal thermostat switch at the rear of the cylinder head and the amber warning light on the instrument panel.

1. Disconnect the battery earth lead.
2. Disconnect the wiring from the mixture control warning light switch.
3. Disconnect the operating wire from the lever at the carburetter.
4. Withdraw the inner wire and knob from the driver's side of the dash.
5. Loosen the screw holding the outer cable at the carburetter.
6. Remove the cold start control outer cable bracket and switch from the dash by removing the securing nut on the driver's side of the dash.
7. If necessary, remove the warning light switch from the bracket.
8. If necessary, remove the control outer cable from the bracket by unscrewing the cable through the securing locknut.

### To refit

Reverse the removal procedure, taking care that the carburetter cold start lever is fully closed when the control knob is pushed right in.

**Note:** For further details of the mixture control warning light system, see Section N.

## Cut-off control, Diesel models, remove and refit—Operation P1-5

Workshop hand tools:
Spanner sizes: 2 BA, ¼ in. BSF open end
Screwdriver (small)

### To remove

1. Disconnect the control cable from the injection pump cut-off lever and outer cable support.
2. Unscrew the securing nut from the engine side of scuttle and withdraw the cut-off control cable complete.

### To refit

1. Secure the control to the scuttle and the outer cable to the clamping clip on injection pump; locate the inner cable in the cut-off lever clamping screw, then, pressing the lever firmly downward, tighten the clamping screw.

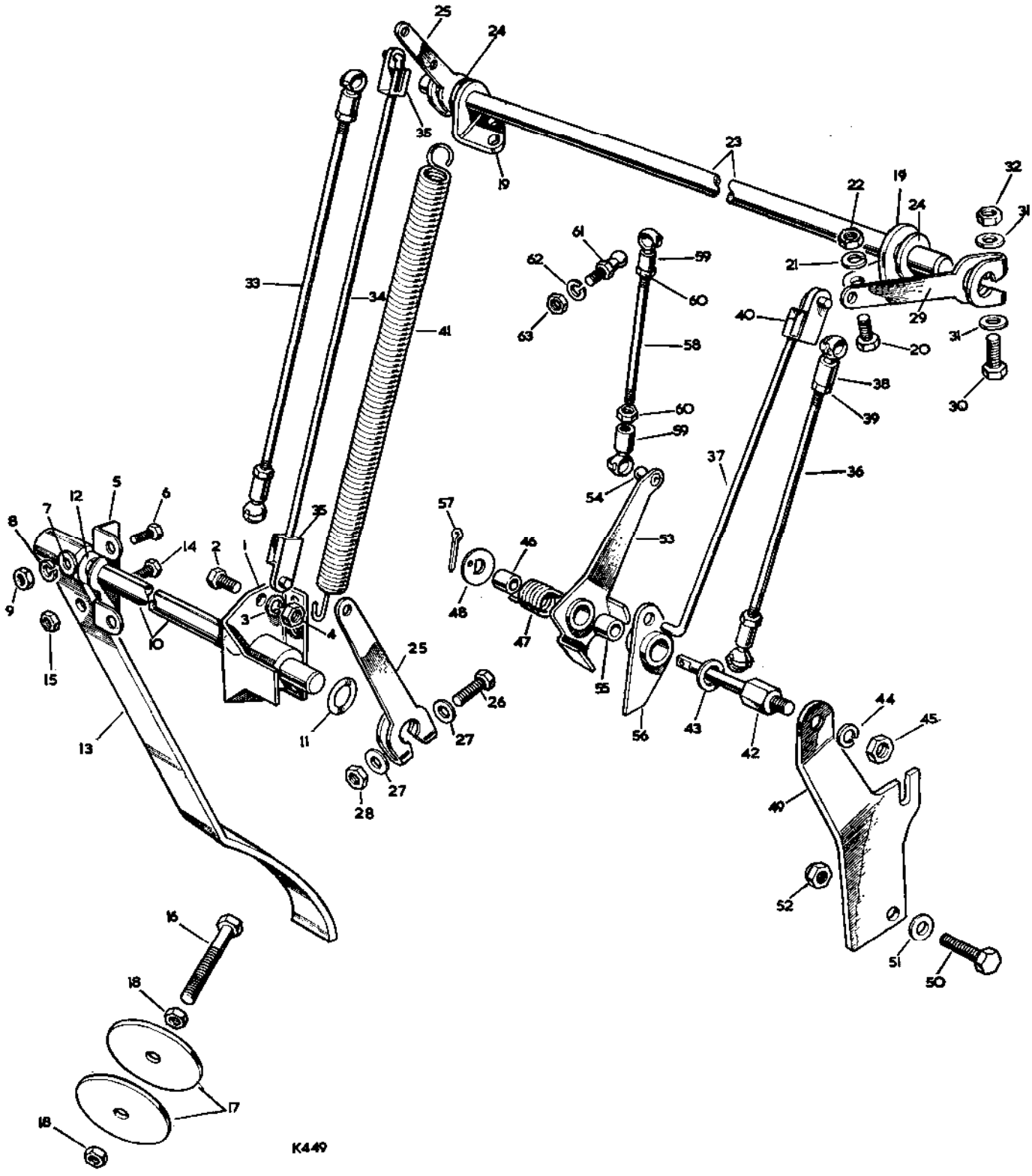


**Fig. P1-9 Accelerator controls, 2½ litre Petrol models**

**Key to illustration of accelerator controls, 2¼ litre Petrol models**

1 Housing for accelerator shaft and pedal stop
2 Bolt (¼ in. UNF x ½ in. long) } Fixing housing
3 Spring washer } and pedal stop
4 Nut (¼ in. UNF) } to dash
5 Bracket for accelerator pedal shaft
6 Bolt (¼ in. UNF x ⅝ in. long) }
7 Plain washer } Fixing bracket
8 Spring washer } to dash
9 Nut (¼ in. UNF) }
10 Shaft for accelerator pedal
11 Special washer } On accelerator
12 Plain washer } shaft
13 Accelerator pedal
14 Bolt (5/16 in. UNF x ⅞ in. long) } Fixing pedal
15 Nut (5/16 in. UNF) } to shaft
16 Bolt (5/16 in. UNF x 1⅛ in. long) } Pedal
17 Plain washer } stop in
18 Nut (5/16 in. UNF) } floor
19 Bracket for accelerator cross-shaft, 'L' shaped
20 Bolt (¼ in. UNF x ⅝ in. long) } Fixing
21 Spring washer } bracket
22 Nut (¼ in. UNF) } to dash
23 Cross-shaft for accelerator
24 Distance washer for lever
25 Lever for accelerator
26 Bolt (¼ in. UNF x 1¼ in. long) } Fixing
27 Plain washer } levers
28 Nut (¼ in. UNF) } to shaft
29 Lever for cross-shaft
30 Bolt (¼ in. UNF x 1¼ in. long) } Fixing
31 Plain washer } lever to
32 Nut (¼ in. UNF) } cross-shaft
33 Control rod, pedal shaft to cross-shaft
34 Control rod, pedal shaft to cross-shaft
35 Linkage clip for control rod
36 Control rod, cross-shaft to engine
37 Control rod, cross-shaft to engine
38 Ball joint socket for rods
39 Locknut for socket
40 Linkage clip for control rod, cross-shaft to engine
41 Return spring for pedal
42 Spindle for carburetter bell crank
43 Plain washer }
44 Spring washer } Fixing spindle
45 Nut (⅜ in. UNF) }
46 Spacer for spindle
47 Torsion spring for bell crank
48 Special washer for torsion spring
49 Bracket for accelerator controls
50 Bolt (⅜ in. UNF x 1 in. long) } Fixing bracket to
51 Plain washer } steering column
52 Self-locking nut (⅜ in. UNF) } support bracket
53 Carburetter bell crank lever assembly
54 Ball end for lever
55 Bush for bell crank
56 Carburetter relay lever
57 Split pin fixing levers to spindle
58 Control rod, bell crank to carburetter
59 Ball joint } For
60 Locknut (2 BA) } control rod
61 Ball end for carburetter lever
62 Spring washer } Fixing ball end to
63 Nut (¼ in. UNF) } carburetter lever

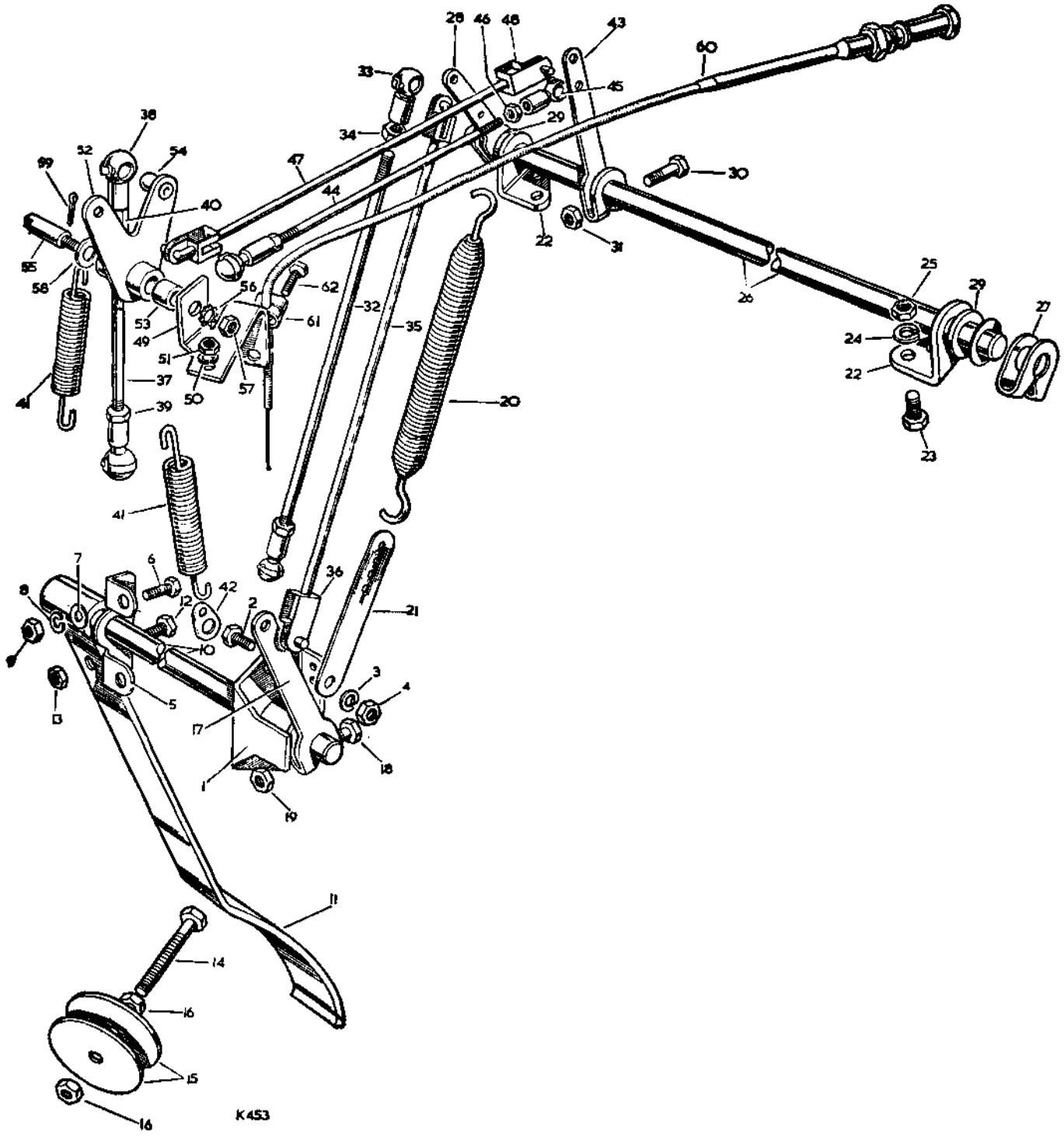


**Fig. P1-10. Accelerator controls, 2½ litre Diesel models**

**Key to illustration of accelerator controls, 2¼ litre Diesel models**

1 Housing for accelerator shaft and pedal stop
2 Bolt (¼ in. UNF x ½ in. long) } Fixing housing
3 Spring washer } and pedal stop
4 Nut (¼ in. UNF) } to dash
5 Bracket for accelerator pedal shaft
6 Bolt (¼ in. UNF x ⅝ in. long) }
7 Plain washer } Fixing bracket
8 Spring washer } to dash
9 Nut (¼ in. UNF) }
10 Shaft for accelerator pedal
11 Accelerator pedal
12 Bolt (5/16 in. UNF x ⅞ in. long) } Fixing pedal
13 Nut (5/16 in. UNF) } to shaft
14 Bolt (5/16 in. UNF x 2½ in. long) } Pedal
15 Plain washer } stop in
16 Nut (5/16 in. UNF) } floor
17 Lever for accelerator on pedal shaft
18 Bolt (¼ in. UNF x 1¼ in. long) } Fixing lever
19 Nut (¼ in. UNF) } to shaft
20 Return spring for pedal
21 Anchor for return spring
22 Bracket for accelerator cross-shaft
23 Bolt (¼ in. UNF x ⅝ in. long) } Fixing
24 Spring washer } brackets
25 Nut (¼ in. UNF) } to dash
26 Accelerator cross-shaft
27 Stop clip for cross-shaft
28 Accelerator lever on cross-shaft from pedal
29 Distance washer for cross-shaft
30 Bolt (¼ in. UNF x 1¼ in. long) } Fixing levers and stop clip
31 Nut (¼ in. UNF) } to cross-shaft
32 Control rod, pedal shaft to cross-shaft
33 Ball joint socket } For
34 Locknut (2 BA) } rod
35 Control rod, pedal shaft to cross shaft
36 Linkage clip for control rod
37 Control rod, bell crank to accelerator lever
38 Ball socket }
39 Nut (2 BA) } For bell crank control rod
40 Adjuster nut }
41 Return spring for accelerator and stop levers on distributor pump
42 Anchor for return spring
43 Accelerator lever on cross-shaft to engine
44 Control rod, cross-shaft to bell crank
45 Ball joint } For
46 Locknut (2 BA) } control rod
47 Control rod, cross-shaft to bell crank
48 Linkage clip for control rod
49 Bracket for bell crank on distributor pump
50 Spring washer } Fixing bracket to
51 Nut (10 UNF) } distributor pump
52 Bell crank complete on distributor pump
53 Bush for bell crank
54 Ball end for bell crank
55 Pin for bell crank
56 Shakeproof washer } Fixing pin to bell
57 Nut (¼ in. UNF) } crank bracket
58 Plain washer } Fixing bell crank
59 Split pin } lever to pin
60 'Engine stop' control
61 Clip } Fixing control outer cable
62 Screw (2 BA x ⅝ in. long) } to abutment bracket on distributor pump

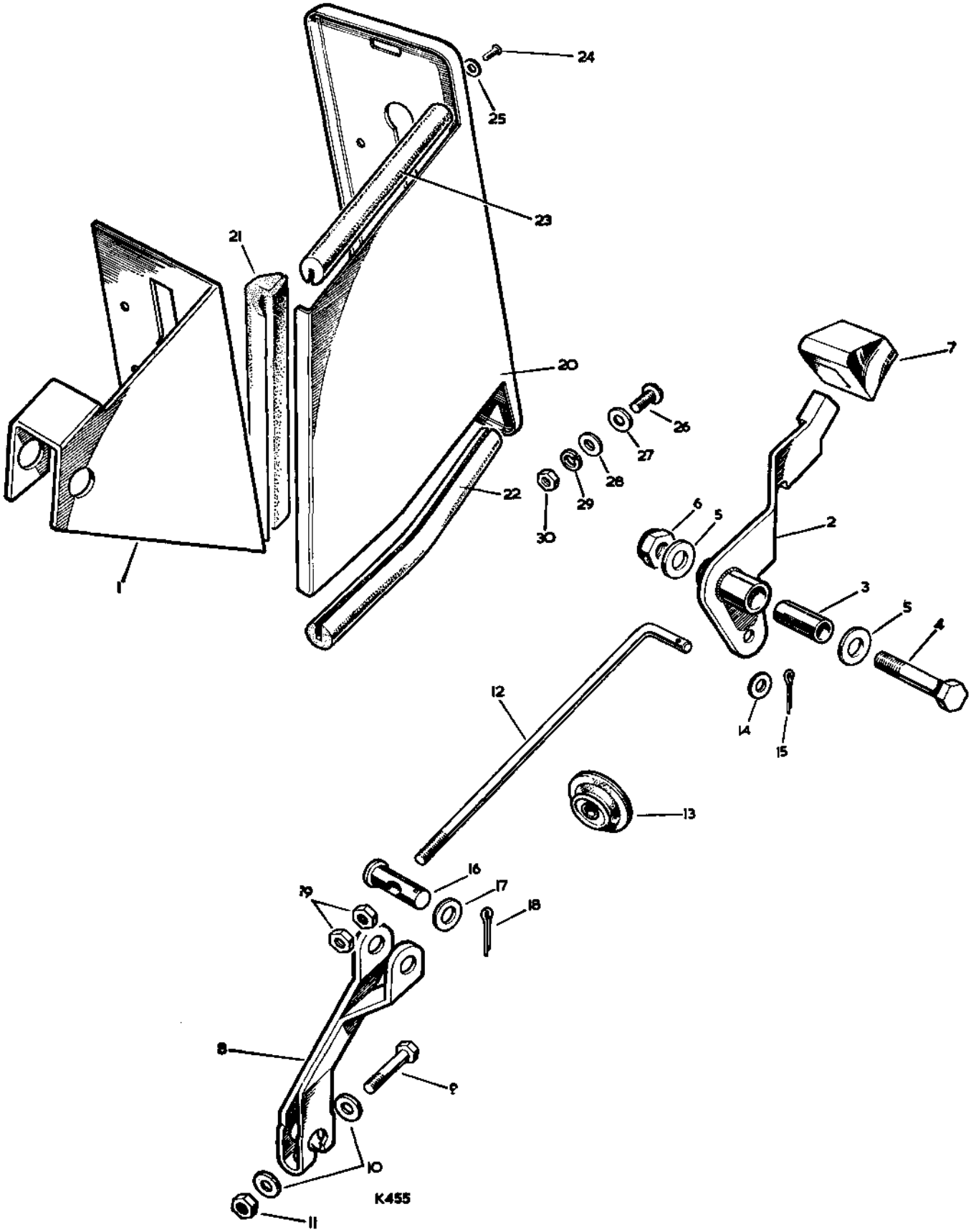


**Fig. P1-11. Hand accelerator, 2½ litre Diesel model.**

**Key to illustration of hand accelerator, 2½ litre Diesel models**

1 Housing and quadrant for control
2 Lever for control
3 Distance tube for housing
4 Bolt (¼ in. UNF x 1¼ in. long) } Fixing control lever and tube to housing
5 Plain washer
6 Self-locking nut (¼ in. UNF)
7 Knob for lever
8 Operating lever for cross-shaft
9 Bolt (¼ in. UNF x 1¼ in. long) } Fixing operating lever to accelerator cross-shaft
10 Plain washer
11 Nut (¼ in. UNF)
12 Control rod for engine speed control
13 Grommet in dash for control rod
14 Plain washer } Fixing control rod to control lever
15 Split pin
16 Joint pin } Fixing control rod to operating lever
17 Plain washer
18 Split pin
19 Nut (2 BA) fixing control rod to joint pin
20 Mounting panel, LH } For control housing
Mounting panel, RH
21 Rubber seal, rear } For mounting panel
22 Rubber finisher, bottom
23 Rubber finisher, top
24 Drive screw } Fixing mounting panel to control housing
25 Plain washer
26 Screw (2 BA x ½ in. long) } Fixing mounting panel to dash, lower
27 Plain washer
28 Packing washer
29 Spring washer
30 Nut (2 BA)

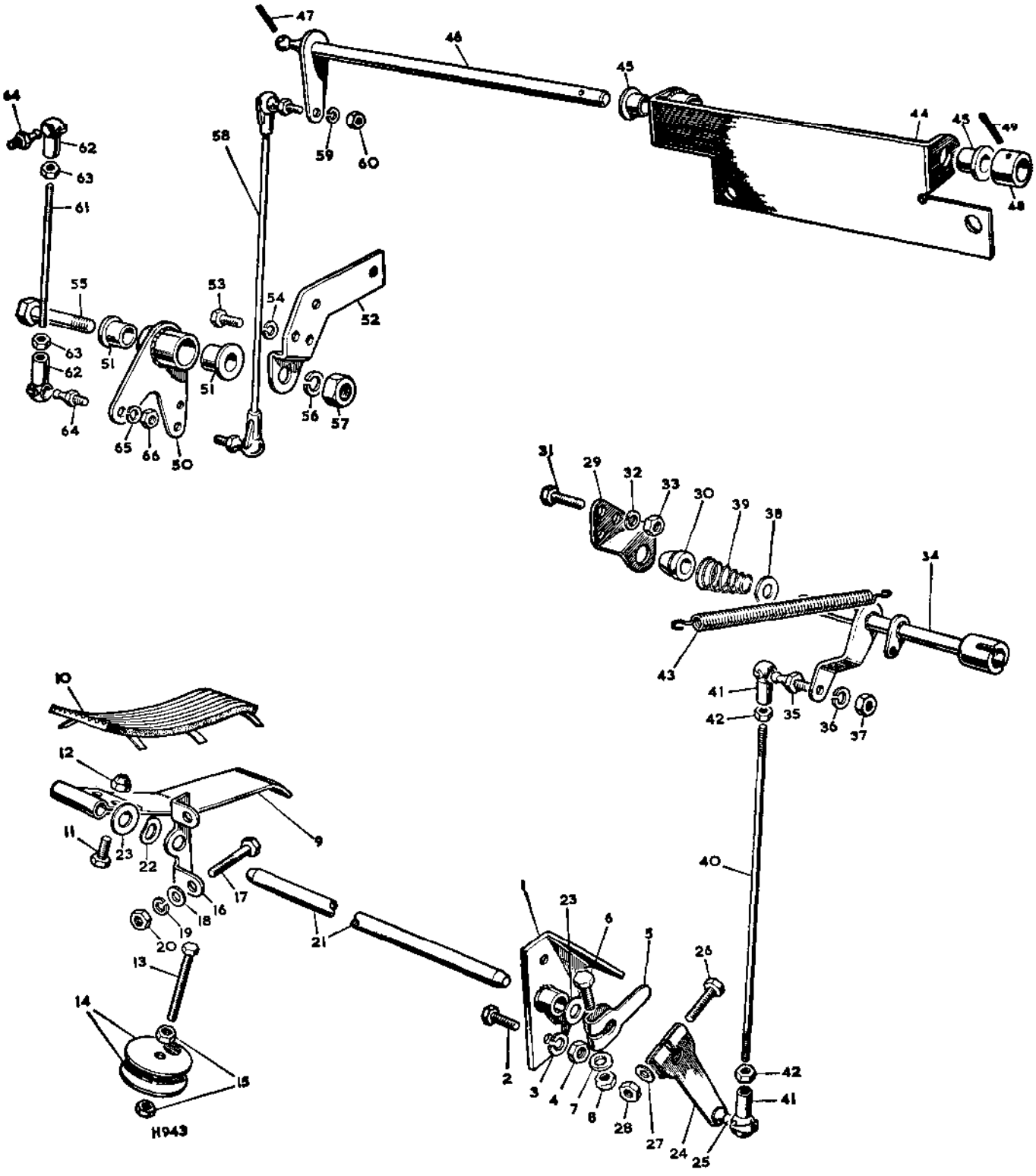


**Fig. P1-12. Accelerator levers and rods, 2.6 litre, 6 cylinder models**

**Key to illustration of accelerator levers and rods, 2.6 litre, 6 cylinder models**

1 Bracket for accelerator pedal and stop
2 Bolt ($\frac{1}{4}$ in. UNF x $\frac{1}{2}$ in. long) } Fixing bracket
3 Spring washer } and pedal stop
4 Nut ($\frac{1}{4}$ in. UNF) } to dash
5 Pedal stop lever
6 Bolt ($\frac{1}{4}$ in. UNF x $1\frac{1}{4}$ in. long) } Fixing lever
7 Plain washer } to
8 Nut ($\frac{1}{4}$ in. UNF) } pedal shaft
9 Accelerator pedal
10 Pad for accelerator pedal
11 Bolt ($\frac{5}{16}$ in. UNF x $\frac{3}{8}$ in. long) } Fixing pedal
12 Nut ($\frac{5}{16}$ in. UNF) } to shaft
13 Bolt ($\frac{5}{16}$ in. UNF x $1\frac{1}{8}$ in. long) } Pedal
14 Plain washer } stop in
15 Nut ($\frac{5}{16}$ in. UNF) } floor
16 Bracket for accelerator pedal shaft
17 Bolt ($\frac{1}{4}$ in. UNF x $\frac{3}{8}$ in. long) }
18 Plain washer } Fixing bracket
19 Spring washer } to dash
20 Nut ($\frac{1}{4}$ in. UNF) }
21 Shaft for accelerator pedal
22 Special washer } On accelerator
23 Plain washer } shaft
24 Lever assembly for accelerator
25 Ball end for lever
26 Bolt ($\frac{1}{4}$ in. UNF x $1\frac{1}{4}$ in. long) }
27 Plain washer } Fixing lever to
28 Nut ($\frac{1}{4}$ in. UNF) } shaft
29 Mounting bracket for extension shaft
30 Bearing in mounting bracket for shaft
31 Bolt ($\frac{1}{4}$ in. UNF x $\frac{5}{8}$ in. long) } Fixing
32 Spring washer } mounting bracket
33 Nut ($\frac{1}{4}$ in. UNF) } to dash
34 Extension shaft and lever
35 Ball end for extension shaft lever
36 Spring washer } Fixing ball end
37 Nut (2 BA) } to lever
38 Plain washer } For
39 Conical spring for extension shaft } extension shaft
40 Control rod, pedal shaft to extension shaft
41 Ball joint socket for control rod
42 Locknut (2 BA) fixing socket to control rod
43 Return spring, bell crank to extension shaft
44 Bracket assembly for accelerator cross-shaft
45 Bearing for cross-shaft
46 Accelerator cross-shaft and lever
47 Spiral pin for cross-shaft
48 Boss for cross-shaft
49 Spring dowel fixing boss to shaft
50 Bell crank lever and bearings assembly
51 Bearing for bell crank
52 Support bracket for bell crank
53 Set bolt ($\frac{1}{4}$ in. UNC x $\frac{5}{16}$ in. long) } Fixing support bracket to
54 Spring washer } cylinder head
55 Centre pin } Fixing bell crank to
56 Spring washer } support bracket
57 Nut ($\frac{5}{16}$ in. UNC) }
58 Control rod, cross shaft to bell crank
59 Spring washer } Fixing control rod
60 Nut (10 UNF) } to levers
61 Control rod, bell crank to carburetter
62 Ball joint } For
63 Locknut (2 BA) } control rod
64 Ball end } Fixing control rod
65 Spring washer } to bell crank lever
66 Nut (2 BA) } and carburetter

## Fault diagnosis—Instruments and controls

| Symptom | Possible cause | Investigation | Remedy |
|---|---|---|---|
| **Speedometer needle erratic** | Loose securing nut at the gear-box rear drive output flange | Remove rear propeller shaft and check nut for security | Securely tighten nut and lock with a new split pin |
| | Speedometer cable damaged or position of cable incorrect | Check position and condition of inner and outer cables | Reposition or fit new cable as required |
| | Faulty speedometer head | | Fit new speedometer head |
| | Worn speedometer drive worm and pinion | Remove speedometer drive housing and check worm and pinion | Fit new parts as required |

**Note:** For details of other instruments and warning lights, Section N refers.

# SECTION Q—BODY

# INDEX—BODY

**Note:** A comprehensive, detailed Index is included at the end of this manual


| Description | Operation Number |
|---|---|
| Body repairs (welding, rivetting and painting) | At beginning of Section |
| Bonnet panel | 1 |
| Cab | 11 |
| Dash panel | 8–9 |
| Front floor | 6–7 |
| Front wings | 3 |
| Hard top | 12 |
| Radiator grille | 2 |
| Rear body | 13 |
| Rear door | 15 |
| Safety harness | 16 |
| Seat base | 10 |
| Side doors | 5 |
| Station Wagon top | 14 |
| Windscreen | 4 |

# Body repairs, general information

With the exception of the radiator grille panel, dash panel, door frames and tail board frame, which are steel, the Land-Rover body is made from a special light magnesium-aluminium alloy known as 'Birmabright', with steel cappings and corner brackets; all steel parts are galvanised.

**'Birmabright'** was developed for aircraft use, and it is much stronger and tougher than pure aluminium.

It melts at a slightly lower temperature than pure aluminium and will not rust nor corrode under any normal circumstances.

It is work-hardening, and so becomes hard and brittle when hammered, but it is easily annealed.

Exposed to the atmosphere, a hard oxide skin forms on the surface of it.

## Panel beating 'Birmabright'

'Birmabright' panels and wings can be beaten out after accidental damage in the same way as sheet steel. However, under protracted hammering the material will harden, and then it must be annealed to prevent the possibility of cracking.

This is quite easily done by the application of heat, followed by slow air-cooling, but as the melting point is low, heat must be applied slowly and carefully. A rough but very useful temperature control is to apply oil to the *cleaned* surface to be annealed. Play the welding torch on the underside of the cleaned surface and watch for the oil to clear, which it will do quite quickly, leaving the surface clean and unmarked. Then allow to cool naturally in the air, when the area so treated will again be soft and workable. Do not quench with oil or water.

Another method is to clean the surface to be annealed and then rub it with a piece of soap. Apply heat *beneath* the area, as described above, and watch for the soap stain to clear. Then allow to cool, as for the oil method. When applying the heat for annealing, always hold the torch some little distance from the metal, and move it about, so as to avoid any risk of melting it locally.

## Gas welding 'Birmabright'

A small jet must be used, one or two sizes smaller than would be used for welding sheet steel of comparable thickness. For instance, use a No. 2 nozzle for welding 18 swg (.048 in) sheet, and a No. 3 for 16 swg (.064 in.) sheet. The flame should be smooth, quiet and neutral, though a slightly reducing flame may be used—that is, there may be a *slight* excess of acetylene. See Fig. Q1-1.

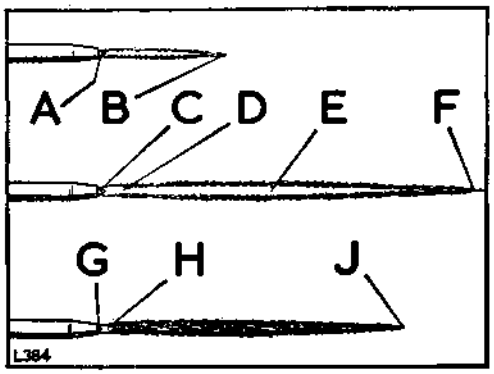


**Fig. Q1-1. Welding jet, Oxydising, Neutral Reducing**

A—Short pointed inner cone bluish white
B—Bluish envelope
C—Brilliant inner core well defined rounded end
D—Hottest point of flame
E—Blue to orange envelope
F—Nearly colourless
G—Brilliant inner core
H—Feathery white plume
J—Blue to orange envelope

Use only 5 per cent magnesium/aluminium welding rod (5 Mg/A). Sifalumin No. 27 (MG.5 Alloy) (use Sifbronze Special flux with this rod) or a thin strip cut off parent metal—that is to say, a strip cut from an old and otherwise useless 'Birmabright' panel or sheet. Do not use too wide or thick a strip, or trouble may be experienced in making it melt before the material which is being welded.

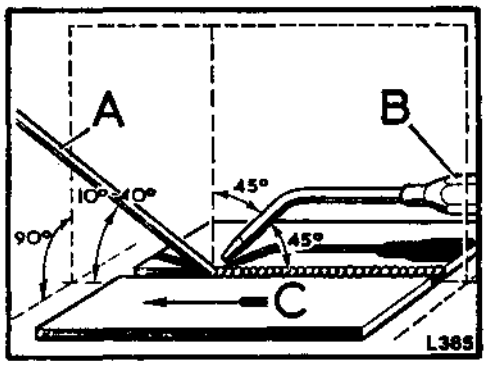


**Fig. Q1-2. Method of welding**

A—Filler rod
B—Torch
C—Direction of welding

Clean off all grease and paint, dry thoroughly and then clean the edges to be welded, and an area at least half an inch on either side of the weld, with a stiff wire scratch-brush or wire wool. Cleanliness is essential. Also clean the welding rod or strip with wire wool.

A special acid flux must be used, and we recommend Hari-Kari', which is obtainable from:

The Midland Welding Supply Co Ltd,
105 Lakey Lane,
Birmingham 28, England.

or

Sifbronze Special Flux, which is obtainable from:

Suffolk Iron Foundry (1920) Ltd,
Sifbronze Works,
Stowmarket, England.

A small quantity of 'Hari-Kari' may be made into a paste with water, following the directions on the tin, and the paste must be applied to both surfaces to be welded, and also to the rod. In the case of Sifbronze Special Flux use in powder form as directed. Remember that aluminium and its alloys do not show 'red-hot' before melting, and so there is nothing about the appearance of the metal to indicate that it has reached welding temperature. A little experience will enable the operator to gauge this point, but a useful guide is to sprinkle a little sawdust over the work; this will sparkle and char when the right temperature is approached; a piece of dry wood rubbed over the hot metal will sparkle at the point of contact.

As the flux used is highly acid, it is essential to wash it off thoroughly immediately after a weld is completed. The hottest possible water should be used, with wire wool or a scratch-brush. Very hot soapy water is good, because of the alkaline nature of the soap, which will tend to 'kill' the acid.

It is strongly recommended that a few welds are made on scrap metal before the actual repair is undertaken if the operator is not already experienced in welding aluminium and its alloys.

The heat of welding will have softened the metal in the area of the repair, and it may be hardened again by peening with a light hammer. Many light blows are preferable to fewer heavy ones. Use a 'dolly' or anvil behind the work to avoid denting and deformation, and to make the hammering more effective. Filing off surplus metal from the weld will also help to harden the work again.

### Welding tears and patching

If a tear extends to the edge of a panel, start the weld from the end away from the edge and also at this point drill a small hole to prevent the crack spreading, then work towards the edge.

When welding a long tear, or making a long welded joint, tack the edges to be welded at intervals of from 2 in. to 4 in. (50 to 100 mm) with spots. This is done by melting the metal at the starting end and fusing into it a small amount of the filler rod, repeating the process at the suggested intervals. After this, weld continuously along the joint from right to left, increasing the speed of the weld as the material heats up.

After the work has cooled, wash off all traces of flux as described above, and file off any excess of build-up metal.

When patching, cut the patch to the correct shape for the hole to be filled, but of such size as to leave a gap of $\frac{1}{32}$ in. between it and the panel all round. Clean the patch and the panel, and then weld as described above. Never apply an 'overlay' patch.

### Electric welding

At the Rover Factory the 'Argon-Arc' process is used, and this is very satisfactory, since all atmospheric oxygen is excluded from the weld by the Argon gas shield. For all body repair work normally undertaken by a Distributor's or Dealer's service department, the gas welding method is sufficient and quite satisfactory.

### Spot-welding

Spot-welding is largely used in the manufacture of Land-Rover bodies, but this is a process which can only be carried out satisfactorily by the use of the proper apparatus. Aluminium and its alloys are very good conductors of heat and electricity, and thus it is most important to maintain the right conditions for successful spot-welding. The correct current density must be maintained, and so must the 'dwell' of the electrodes. Special spot-welding machines have been developed, but they are expensive, and though the actual work can be carried out by comparatively unskilled labour, supervision and machine maintenance must be in the hands of properly qualified persons.

### Riveting

Where both sides of the metal are accessible and it is possible to use an anvil or 'dolly', solid aluminium rivets may be used, with a suitable punch or 'pop' to ensure clean rounded heads on the work. For riveting blind holes, 'pop-rivets' must be used. These are inserted and closed by special 'Lazy-Tong' 'pop-rivet' pliers.

**Painting**

Owing to the hard oxide skin which forms on the surface of the alloy when exposed to the atmosphere, it is necessary to etch a repaired panel before repainting. Degrease the area to be painted by wiping thoroughly with thinners, dry off, and then apply the acid etching medium. A suitable one is 'Deoxidine 125' which is made by ICI Paints Division. After application, wash off thoroughly with hot water, and again dry thoroughly. Slightly roughen the surface with emery paper of 100 grit. Apply a suitable primer, such as 'Glasso', as thinly as practicable (too thick a coat may crack or 'craze'), then use three coats of filler and finish with the appropriate colour. Unless the initial etcher is used, paint is liable to come away, as it cannot 'key' into the hard oxide of an untreated alloy surface.

## Bonnet panel, remove and refit—Operation Q1-1

Workshop hand tools:
Screwdriver (medium), Pliers

**To remove**

1. Remove the spare wheel from the bonnet panel, if fitted.
2. Remove fixings at prop rod and bonnet hinge.
3. Remove bonnet panel.

**To refit**

1. Refit the bonnet panel, using suitable coverings on the wings to avoid damage to paintwork.
2. Refit the spare wheel, if fitted, to bonnet panel.

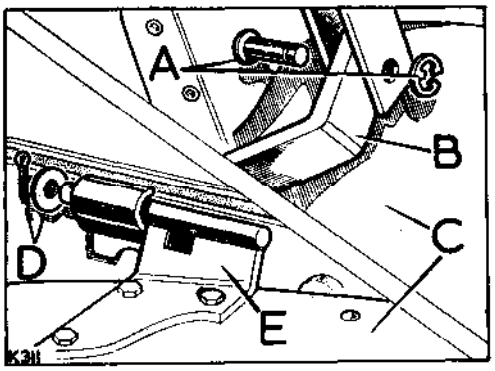


**Fig. Q1-3. Fixings at bonnet panel**

A—Prop rod fixings
B—Bonnet prop rod
C—Bonnet panel
D—Bonnet hinge fixings, RH side only
E—Bonnet hinge

## Radiator and grille panel assembly, remove and refit—Operation Q1-2

Workshop hand tools:
Spanner sizes: $\frac{7}{16}$ in. x $\frac{1}{2}$ in. AF open ended, 2 off, 2 BA open ended
Screwdriver (medium), Pliers

**2¼litre Petrol and Diesel models:**

Refer to Section A for additional detail information.

**To remove**

1. Remove bonnet. Operation Q1-1.
2. Disconnect battery leads.
3. Remove front apron panel.

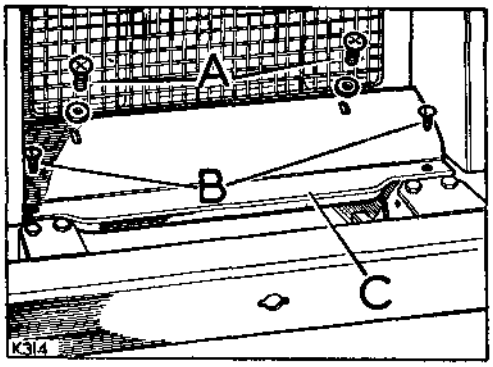


**Fig. Q1-4. Apron panel fixings**
A—Fixings at cross member brackets
B—Fixings at side members
C—Apron panel

4. Remove nameplate and radiator grille.

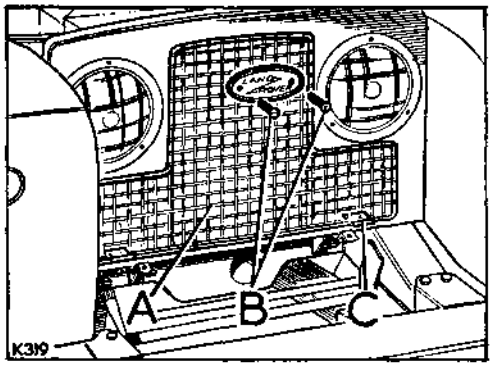


**Fig. Q1-5. Radiator grille fixings**
A—Radiator grille
B—Fixings for nameplate and grille
C—Support brackets

5. Remove radiator cap, drain off coolant.
6. Remove shroud from radiator fan cowl.
7. Slacken fixings and detach radiator coolant hoses.
8. Remove the fan blades fixings and lower the fan blades to rest on lower part of fan cowl. Remove the fan blades when access is obtained during grille panel removal.

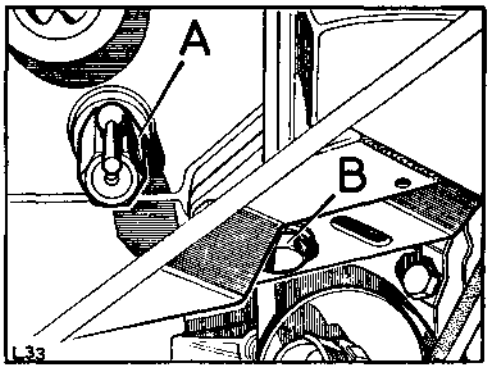


**Fig. Q1-6. Coolant drain taps location**
A—At engine block, RH side
B—At radiator

9. Disconnect the electrical leads for the front lamps at the snap connectors.
10. Remove the grille panel to front wings fixings, the securing nuts and washers are located in the respective wheelarches.
11. Remove the grille panel fixings at the brackets on the chassis cross member.
12. Carefully withdraw the assembly and the previously released fan blades from the engine compartment.

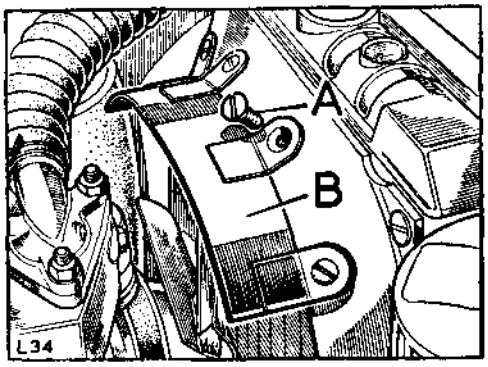


**Fig. Q1-7. Fan shroud fixings**
A—Fixings for fan shroud
B—Fan shroud

**To refit**

1. Refit the radiator grille and radiator complete on to the vehicle. Fit the fan blades to the fan pulley before engaging the grille panel fixings. See Figs. Q1-10 and Q1-9 for fixing details.

## Operation Q1-2—*continued*

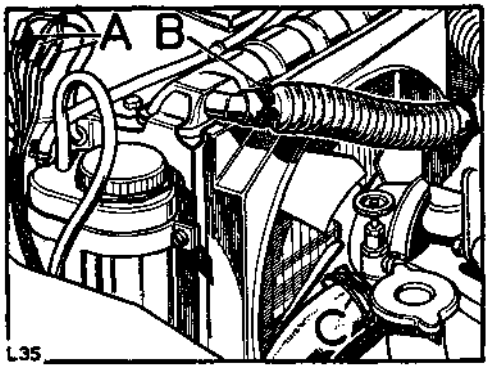


**Fig. Q1-8. Coolant hose and lead connectors**

A—Snap connectors (3 off each side of vehicle)
B—Fixings at top hose
C—Fixings at bottom hose

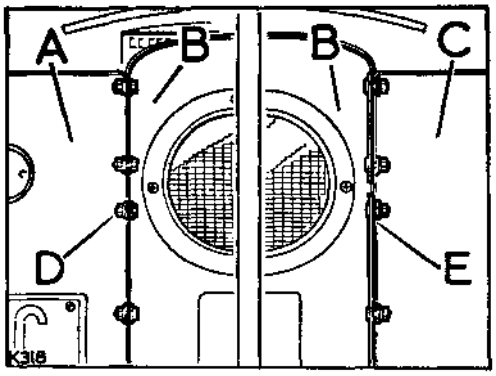


**Fig. Q1-9. Radiator grille panel fixings**

A—Front wing, RH side
B—Radiator grille panel
C—Front wing, LH side
D—Fixings at wheelarch, RH
E—Fixings at wheelarch, LH

2. Make the electrical connections at the snap connectors, referring to Fig. Q1-8 and the appropriate circuit diagram, if necessary, in Section N.
3. Connect the coolant hoses and replenish the engine coolant system, allowing a free flow through the drain taps before closing them. Fig. Q1-8 refers.
4. Refit the front apron panel. Fig. Q1-4 refers.
5. Connect battery lead.
6. Refit the bonnet panel. Operation Q1-1.

**Coolant System Capacity**
**Bonneted Control Models, 2½ litre Petrol and Diesel**

| Imperial Pints | U.S. Pints | Litres | Antifreeze | Frost Precaution |
|---|---|---|---|---|
| 18 | 21½ | 10,25 | 33⅓% | —32°C (—25°F) |

**Bonneted Control Model, 2.6 Litre Petrol**

| Imperial Pints | U.S. Pints | Litres | Antifreeze | Frost Precaution |
|---|---|---|---|---|
| 24 | 29 | 13.5 | 33⅓% | —32°C (—25°F) |

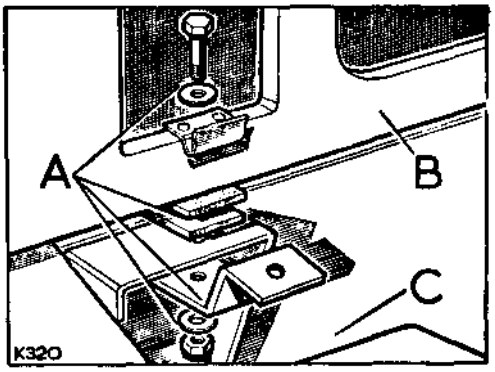


**Fig. Q1-10. Fixings at chassis cross member**

A—Panel fixings
B—Radiator grille panel
C—Chassis cross member

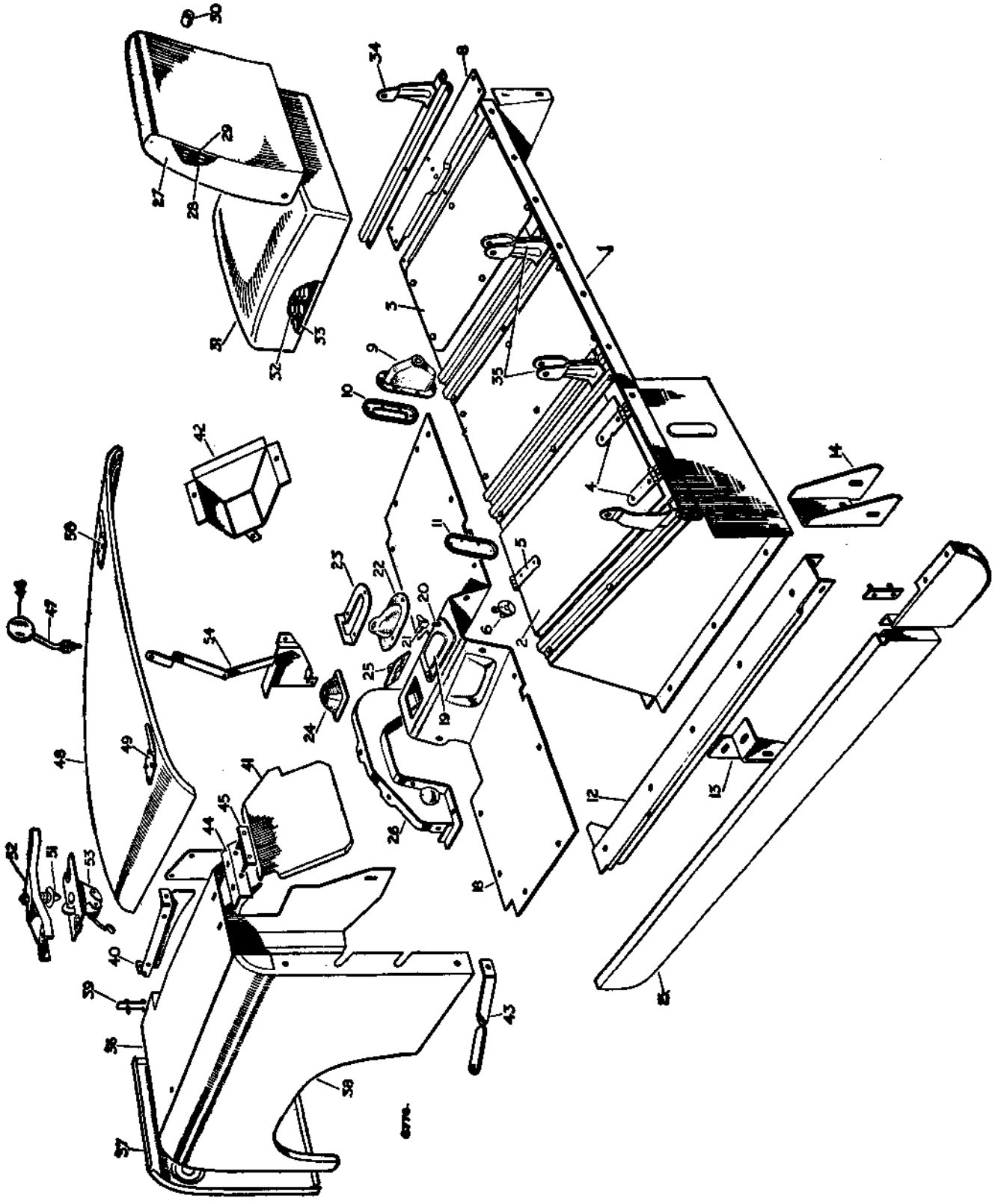

Fig. Q1-11. Layout of seat base, seats, front floor, wings and bonnet

**Key to illustration of seat base, seats, front floor, wings and bonnet**

1 Seat base and floor assembly
2 Tool locker lid
3 Fuel tank cover panel
4 Lid hinge
5 Locker lid hasp
6 Locker lid turnbuckle
7 Centre cover panel
8 Extension panel, at seat base ends
9 Handbrake rubber cover
10 Retainer for rubber cover
11 Handbrake slot cover plate
12 Sill channel LH front
13 Sill channel securing bracket
14 Sill channel mounting bracket, to rear body
15 Front sill panel
16 Rear sill panel
17 Fixing plate for sill panels
18 Front floor complete
19 Inspection cover, for front floor
20 Stud plate for inspection cover wing nut
21 Wing nut, fixing inspection cover
22 Transfer gear lever seal
23 Transfer lever seal retainer
24 Gear lever rubber seal
25 Operating rod cover plate
26 Gearbox cover complete
27 Seat squab
28 Squab spring case
29 Squab frame
30 Buffer, for seat back rest on bracket
31 Seat cushion
32 Cushion spring case
33 Cushion frame
34 Cushion support, outer
35 Seat support, centre
36 Front wing
37 Front panel and registration plate
38 Front wing outer panel
39 Fixing plate, wings to grille panel
40 Wing valance bottom panel
41 Mudshield, front wing
42 Steering unit cover box
43 Front wing stay
44 Bracket, for rear of wing
45 Fixing plate—brackets to dash
46 Mirror
47 Arm for mirror
48 Bonnet top panel
49–50 Bonnet hinges
51 Bonnet catch striker pin
52 Bonnet striker bracket
53 Bonnet control
54 Bonnet prop rod

## Front wings, to remove and refit—Operation Q1-3

Workshop hand tools:
Spanner sizes: 2 BA, $\frac{7}{16}$ in. AF, $\frac{1}{2}$ in. AF open end and socket

**To remove** (Fig. Q1-11)

1. Remove the bonnet. Operation Q1-1.
2. Disconnect the side lamp, and if applicable, flasher lamp and head lamp harness at the snap connectors in the engine compartment.
3. Remove the securing bolts and lift the mudshield out from under the wing. Driver's side:remove the steering box mudshield.
4. Using a box spanner, remove the bolts securing the wing to the scuttle pillar.
5. Remove the bolts securing the wing stay and the wing to the sill panel.
6. Remove the bolts securing the wing to the rear wing upper mounting bracket.
7. Remove the bolt securing the wing to the steering column support plate.
8. Remove the bolts securing the wing to the grille panel (on RH wings, this action also releases the bonnet prop bracket).

**To refit**

1. Reverse the removal procedure

## Windscreen, to remove and refit—Operation Q1-4

Workshop hand tools:
Spanner sizes: 2 BA, $\frac{7}{16}$ in. AF, $\frac{1}{2}$ in. AF, $\frac{3}{4}$ in. AF open end
Screwdriver (medium)

### Windscreen

**To remove** (Fig. Q1-12)

1. Remove the cab or hard top, Operation Q1-11 Q1-12 or Q1-14; if a soft hood is fitted, release the front straps from the support stays at the top of the windscreen and disconnect the top drain channels from the windscreens.
2. Early models—remove the windscreen wiper positive lead plug from the socket on the dash panel.
3. Slacken the nuts at the bottom corners of the windscreen.
4. Remove the windscreen pivot bolts and remove the windscreen complete.

**To refit**

1. Reverse the removal procedure, renewing the windscreen sealing strip if necessary.

### Windscreen glass

1. If necessary, remove the windscreen wiper blade; Early models—disconnect the wiper motor earth wire and remove the wiper motor from the windscreen.
2. Withdraw the drive screws securing the retainers round the glass and prise away the retainers; remove the glass or glasses as necessary.
3. Apply sealing strip $\frac{1}{2}$ in. (12 mm) wide, round the outside on both faces of the new glass and fit the glass by reversing the stripping procedure.

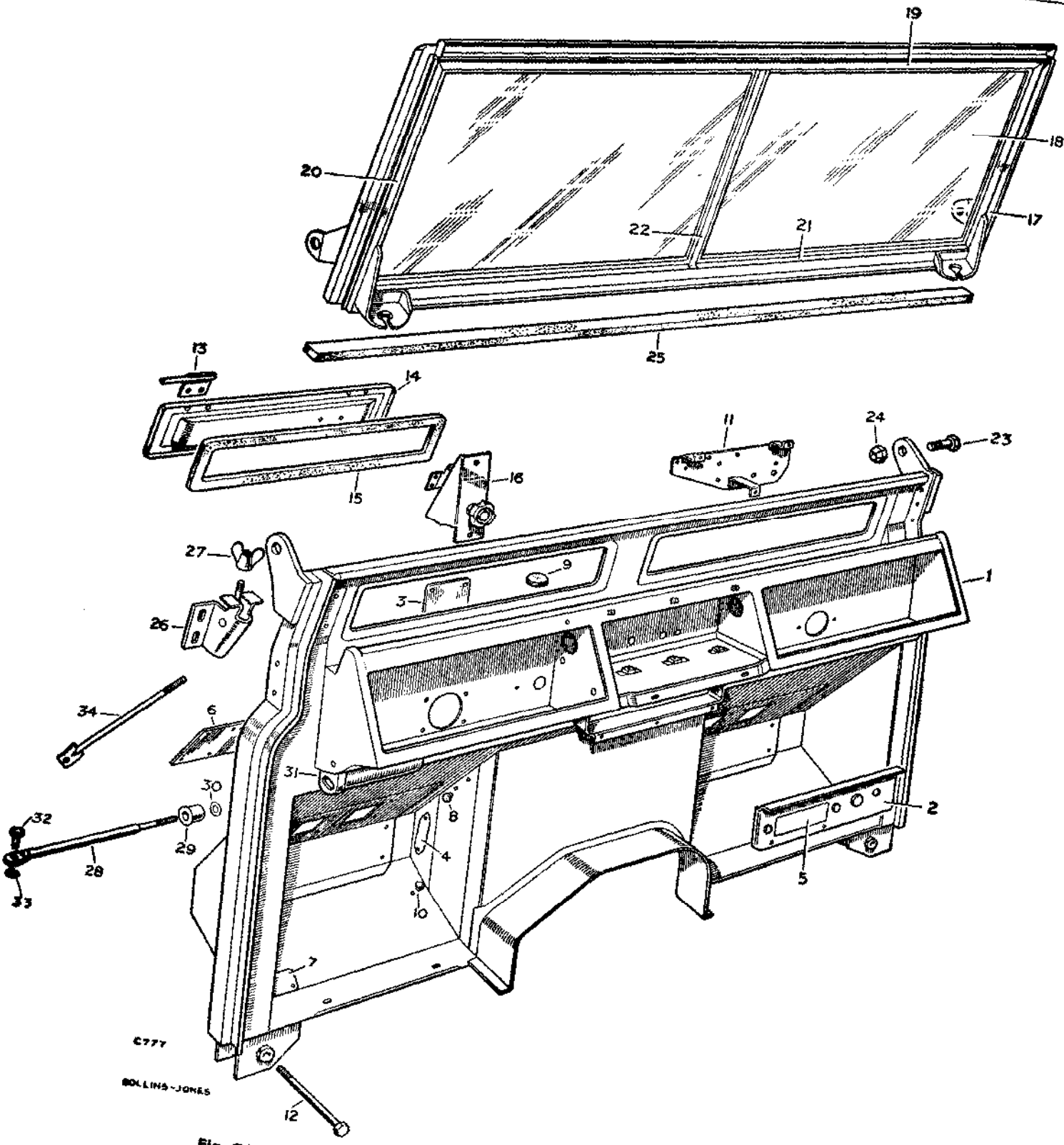


Fig. Q1-12. Layout of dash panel, windscreen and ventilators

**Key to illustration of dash panel, windscreen and ventilators**

1 Dash complete
2 Panel for controls
3 Cover panel for steering cut-out
4 Cover plate for accelerator pedal hole
5 Cover panel for governor cut-out in dash—Petrol models
6 Cover plate for pedal holes
7 Cover plate for dipswitch hole
8 Rubber plug, redundant accelerator holes
9 Rubber grommet for demister holes
10 Rubber plug, redundant accelerator stop holes
11 Mounting plate for pump
12 Tie bolt
13 Ventilator hinge
14 Ventilator lid for dash
15 Sealing rubber for ventilator lids
16 Ventilator control mechanism complete
17 Windscreen complete assembly
18 Glass for windscreen
19 Retainer for windscreen glass, top
20 Retainer for windscreen glass, side
21 Retainer for windscreen glass, bottom
22 Cover for centre strip
23–24 Fixings for windscreen to dash
25 Rubber sealing strip for windscreen
26 Fastener for windscreen, RH
27 Wing nut for fastener
28 Check strap rod
29 Check strap buffer
30 Fixings—buffer to rod
31 Check strap mounting bracket
32–33 Fixings—check strap rod to front door
34 Tie rod

## Side doors, to remove and refit—Operation Q1-5

Workshop hand tools:
Spanner sizes: 2 BA, $\frac{7}{16}$ in. AF, $\frac{1}{2}$ in. AF open end
Screwdriver (medium), Pliers

Special tools:
Tool for locking door handle, Part Number 248877 (early type private locks only)

**Door** (Figs. Q1-13 and Q1-14)

**To remove**

1. Disconnect the door check-strap.
2. Remove the bolts, washers and nuts securing the hinges to the door.
3. Remove the door.

**To refit**

1. Reverse the removal procedure, renewing sealing rubbers as necessary.

**Hinge**

**To remove**

1. The hinges may be stripped by prising back the lock washer tab and removing the special nut and bolt. Care must be taken to ensure that the cone and spring are not lost.

**To refit**

1. Fit a new lock washer and assemble by reversing the removal procedure.
   Adjust by increasing or lessening the load on the spring by tightening or slackening the special nut, and bend lock tab over to secure assembly.

**Door lock**

**To renew**

1. Remove the door lock from the door.
2. If required, remove the striking plate from its support bracket.
3. Renew the lock and plate as necessary and refit by reversing Items 1 and 2.
4. Adjust the position of the striking plate as necessary, so that the door draught excluders are slightly compressed.

**Sliding window**

**To renew**

1. Move the sliding window to allow access to the screws securing glass run channel—top and bottom—then remove the screws from inside channel.
2. Withdraw the top run channel and sliding window.
3. Renew the bottom run channel if necessary.
4. Fit new parts as necessary and assemble by reversing the removal procedure.

**Fixed window**

**To renew**

1. Remove the sliding window.
2. Remove the screws securing front retainer and ease the fixed glass clear of frame.
3. Apply new Prestik sealing strip to window frame, renewing parts as necessary and assemble by reversing the removal procedure.
   Two-piece door only—if necessary, the complete assembly can be removed by removing the nuts, plain washers and spring washers securing the assembly to the door.

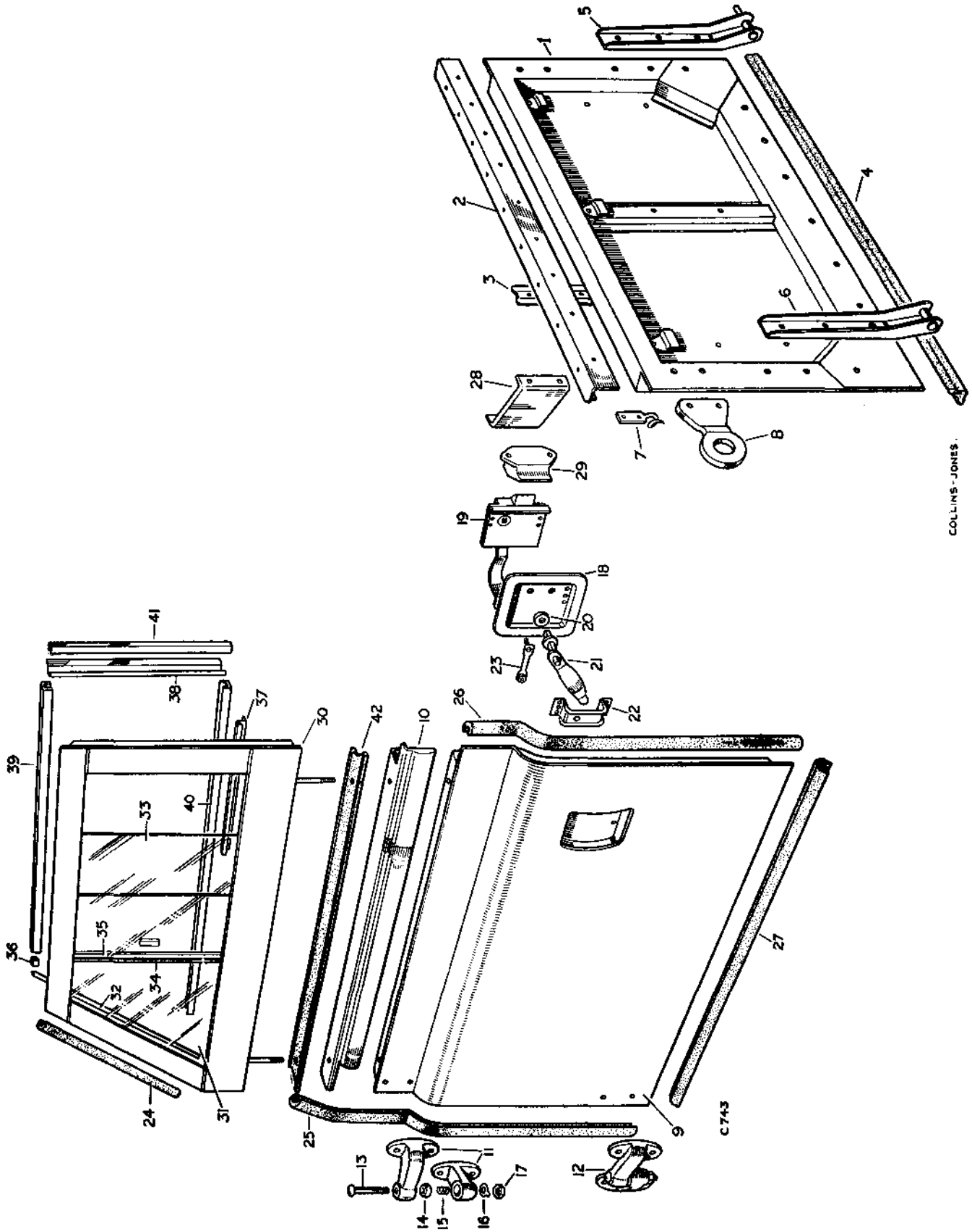


**Fig. Q1-13. Layout of tailboard, doors, and side screens**

**Key to illustration of tailboard, doors and side screens**

1 Tailboard assembly
2 Tailboard top capping
3 Tailboard tread plate
4 Tailboard sealing rubber, bottom
5 Tailboard hinge, RH
6 Tailboard hinge, LH
7 Tailboard chain hook
8 Tailboard locking plate
9 Front door assembly
10 Door top capping
11 Hinge complete, upper
12 Hinge complete, lower
13–17 Fixings for door hinge
18 Door lock mounting plate
19 Door lock
20 Washer, handle to cover
21 Handle
22 Door handle bracket
23 Captive plate, door lock mounting to door
24 Seal for door, front upper
25 Seal for door, front lower, dash
26 Seal for door, rear lower
27 Seal for door, bottom, sill
28 Support bracket at door striker
29 Door lock striking plate
30 Side screen assembly
31 Front fixed window
32 Window retainer
33 Rear sliding window
34 Sealing rubber for front edge of sliding window
35 Sealing rubber channel
36 Buffer for sliding window, at top
37–38 Filler strip for windows
39 Top channel
40 Bottom channel
41 Rear channel
42 Sidescreen sealing strip

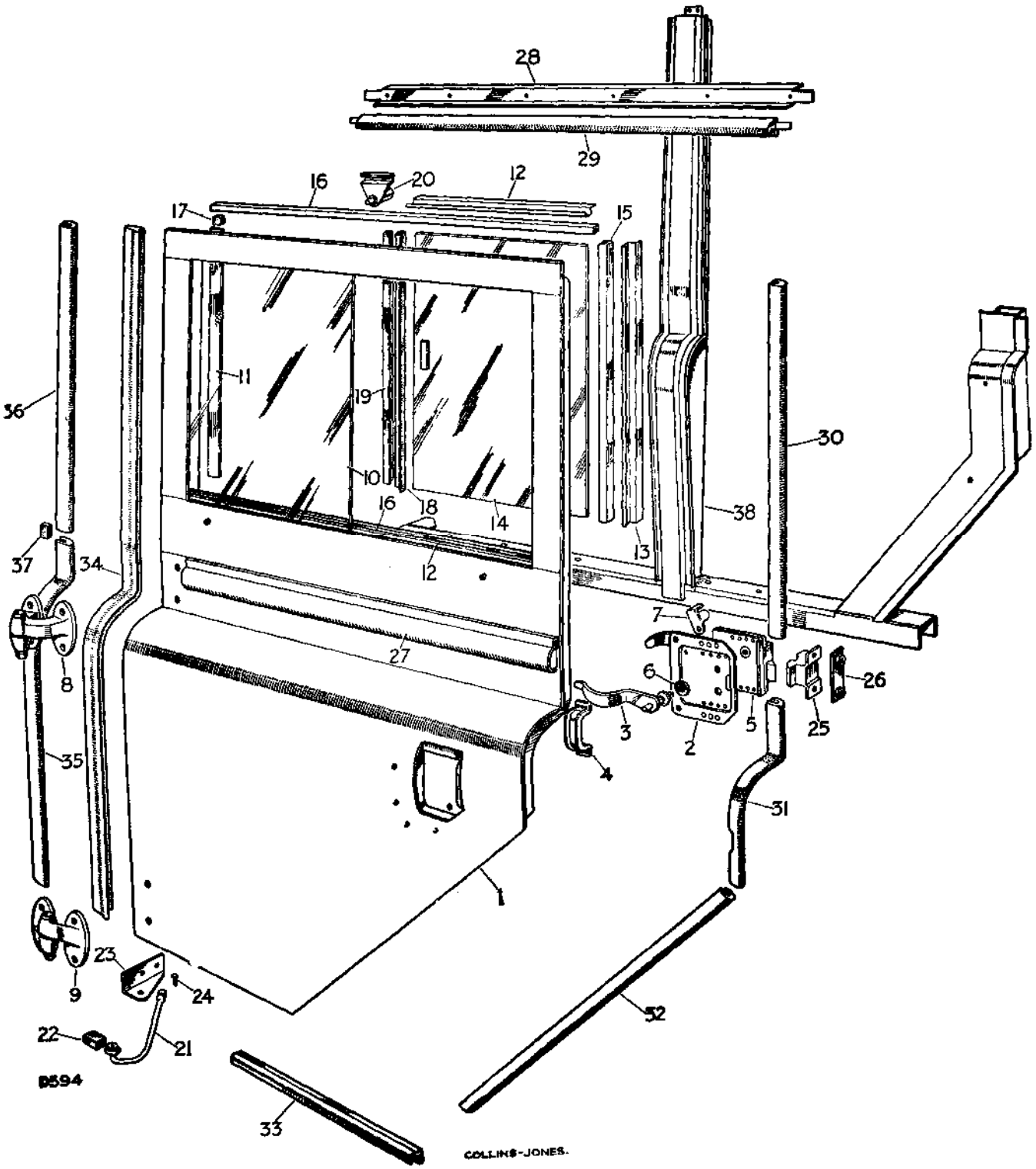


Fig. Q1-14. Layout of rear side doors, 109 Station Wagon

**Key to illustration of rear side doors, 109 Station Wagon**

1 Rear side door assembly, LH
2 Mounting plate for door lock
3 Door handle complete, LH
4 Bracket for door handle, outer mounting
5 Door lock complete, LH
6 Sealing washer, handle to cover
7 Locking catch, LH
8 Door hinge, upper LH
9 Door hinge, lower LH
10 Fixed window for sidescreen
11 Retainer for sidescreen, fixed window
12 Filler, top and bottom, for side screen
13 Filler, rear, for sidescreen
14 Sliding window with knob for sidescreen
15 Sliding light channel, rear
16 Sliding light channel, top and bottom
17 Buffer for sidescreen sliding window at top
18 Sealing rubber for sliding glass
19 Retainer for sliding glass sealing rubber
20 Sliding window catch
21 Rod for check strap, LH
22 Buffer for check strap, short
23 Door check bracket, LH, for rear side door
24 Clevis pin
25 Striking plate for rear side door locks
26 Nut plate
27 Waist moulding, rear side door, LH
28 Seal retainer for rear side door, LH top
29 Rubber seal for retainer
30 Door sealing rubber for upper vertical 'D' post
31 Door sealing rubber for lower vertical 'D' post, LH
32 Door sealing rubber for sloping 'D' post
33 Door sealing rubber at rear side sills, bottom
34 Door sealing rubber at 'C' post
35 Door sealing rubber at 'B' post, lower LH
36 Door sealing rubber at 'B' post, upper
37 Filler piece for 'B' post seal
38 Frame for front and rear side doors, LH

## Front floor, remove and refit, 2½ litre models—Operation Q1-6

*(For removal and refitting instructions for front floor, 2.6 litre models, Operation Q1-7 refers)*

Workshop hand tools:
Spanner sizes: $\frac{7}{16}$ in. AF, $\frac{7}{16}$ in. BSF open end, $\frac{7}{16}$ in. AF socket
Screwdriver (medium)

### To remove

1. Unscrew the knob and locknut from the transfer gear lever.
2. Remove the fixings and withdraw the dust cover from the transfer gear lever.
3. Unscrew the knob and locknut from the four-wheel drive lever, and withdraw the spring and ferrule.
4. Remove both halves of the front floor board.
5. Remove the gearbox tunnel cover.
6. Remove the gearbox tunnel front panel.

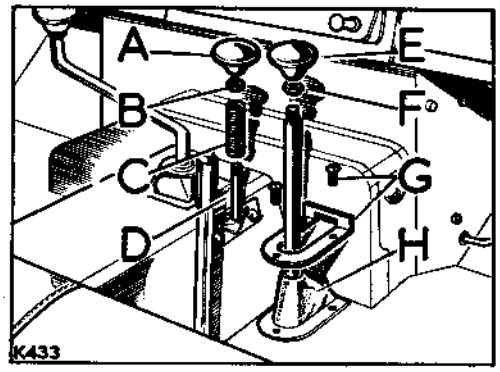


**Fig. Q1-15. Four-wheel drive and transfer levers**

A—Knob, four-wheel drive lever
B—Locknut for knob
C—Spring
D—Ferrule
E—Knob, transfer gear lever
F—Locknut for knob
G—Fixings for dust cover
H—Dust cover

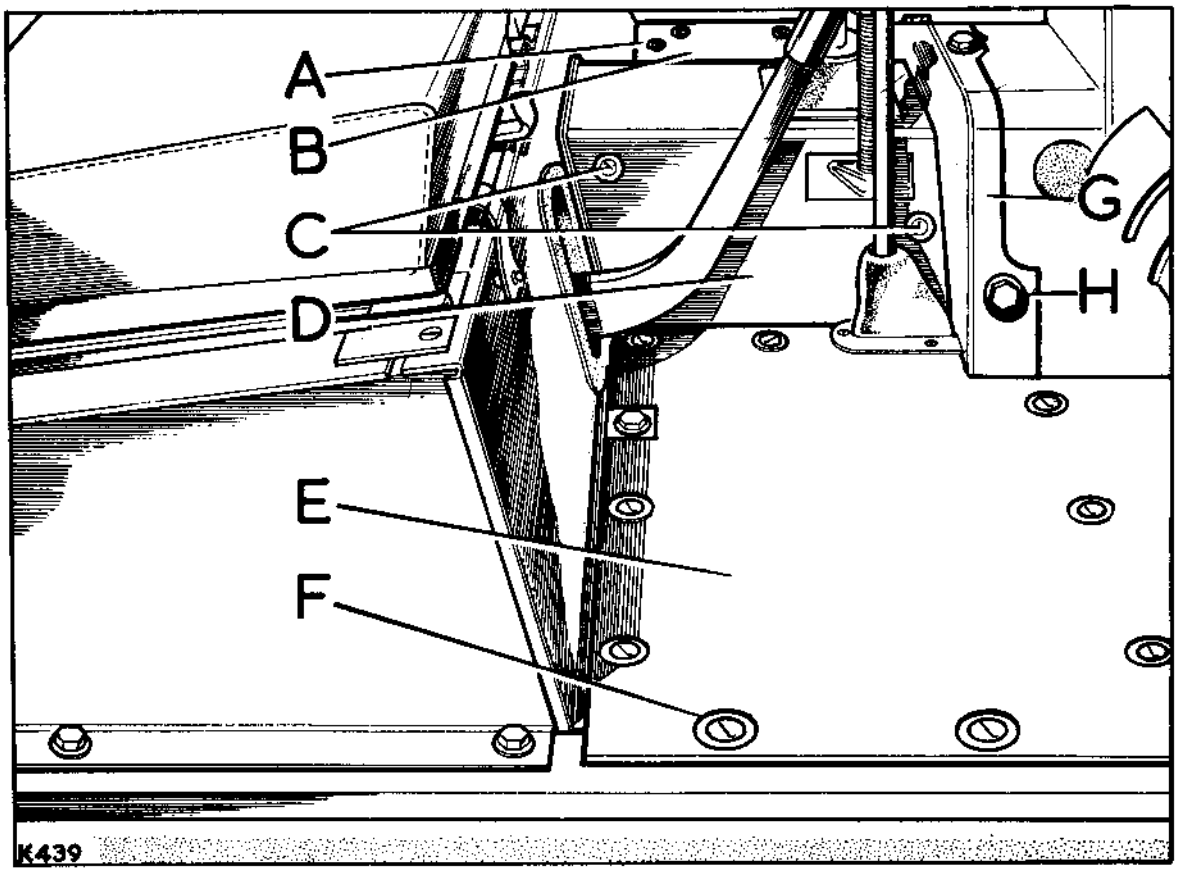


**Fig. Q1-16. Front floor**

A—Fixings (9 off), left-hand floor board
B—Floor board, left-hand
C—Fixings (4 off), tunnel cover
D—Gearbox tunnel cover
E—Floor board, right-hand
F—Fixings (12 off), right-hand floor board
G—Front panel for gearbox tunnel cover
H—Fixings (4 off), front panel

## Operation Q1-6—*continued*

**To refit**

1. Reverse the removal procedure, using waterproof sealant between the joint flanges of the front floor and the chassis. A suitable sealant is 'Sealastrip', manufactured by Expandite Ltd., Chase Road, London NW 10, England.

2. Adjust the four-wheel drive lever during assembly, as follows: Fit the ferrule, spring and locknut to the lever, depress the lever and adjust the locknut until the compressed spring length is $2\frac{5}{16}$ in. $-\frac{1}{16}$ in. (58 mm — 1 mm), then fit the knob and tighten the locknut.

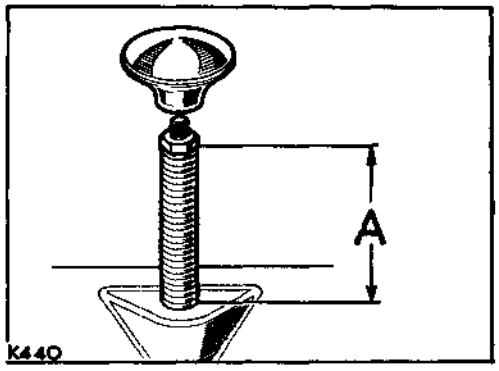


**Fig. Q1-17. Adjusting four-wheel drive control lever**

**A—$2\frac{5}{16}$ in. $-\frac{1}{16}$ in. (58 mm —1 mm)**

## Gearbox tunnel and front panel, 2.6 litre models, remove and refit—Operation Q1-7

*(For removal and refitting instructions for front floor, 2¼ litre models, Operation Q1-6 refers)*

Workshop hand tools:
Spanner sizes: $\frac{7}{16}$ in. AF, $\frac{7}{16}$ in. BSF open end, $\frac{7}{16}$ in. AF socket
Screwdriver (medium)

### To remove

1. Unscrew the knob and locknut from the transfer gear lever.
2. Remove the fixings and withdraw the dust cover from the transfer gear lever.
3. Unscrew the knob and locknut from the four-wheel drive lever, and withdraw the spring and ferrule.
4. Remove the gearbox tunnel cover.
5. Remove the gearbox tunnel front panel.

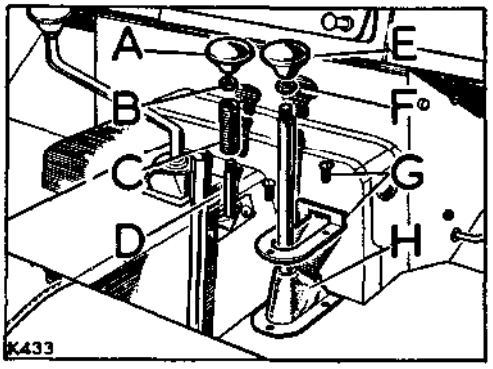


**Fig. Q1-18. Four-wheel drive and transfer levers**

A—Knob, four-wheel drive lever
B—Locknut for knob
C—Spring
D—Ferrule
E—Knob, transfer gear lever
F—Locknut for knob
G—Fixings for dust cover
H—Dust cover

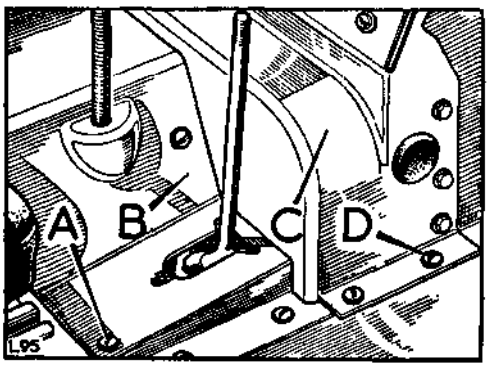


**Fig. Q1-19. Front floor**

A—Fixings, tunnel cover (9 off)
B—Gearbox tunnel cover
C—Front panel for gearbox tunnel cover
D—Fixings, front panel (15 off)

### To refit

1. Reverse the removal procedure, using waterproof sealant between the joint flanges of the front floor and the chassis. A suitable sealant is 'Sealastrip', manufactured by Expandite Ltd., Chase Road, London NW 10, England.
2. Adjust the four-wheel drive lever during assembly as follows: Fit the ferrule, spring and locknut to the lever, depress the lever and adjust the locknut until the compressed spring length is $2\frac{5}{16}$ in. — $\frac{1}{16}$ in. (58 mm — 1 mm), then fit the knob and tighten the locknut.

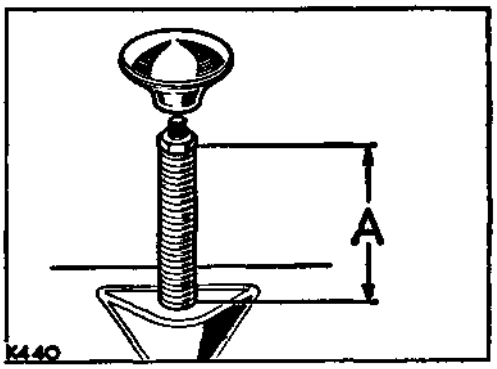


**Fig. Q1-20. Adjusting four-wheel drive control lever**

A—$2\frac{5}{16}$ in. —$\frac{1}{16}$ in. (58 mm —1 mm)

## Dash panel, to remove and refit—Operation Q1-8

Workshop hand tools:
Spanner sizes: 2 BA, $\frac{7}{16}$ in. AF, $\frac{1}{2}$ in. AF, $\frac{3}{4}$ in. AF open end
Screwdrivers (medium and small), Pliers

### General

The following instructions are generally applicable to all models, but individual models may vary slightly, particularly with regard to equipment attached to the dash panel.

### To remove (Fig. Q1-12)

1. Disconnect the battery earth lead.
2. Remove the bonnet. Operation Q1-1.
3. Remove the front wings. Operation Q1-3.
4. Remove the windscreen. Operation Q1-4.
5. Remove the front doors. Operation Q1-5.
6. Remove the front floor and gearbox tunnel. Operations Q1-6 or Q1-7.
7. Remove the fixings from the ball joint connecting the longitudinal arm to the steering box drop arm, then using special tool, Part No. 600590, extract the ball joint to release the longitudinal arm.
8. **Petrol models**—disconnect the starter motor lead from the terminal on the switch.
9. **Diesel models**—disconnect the starter/heater plug switch leads from the switch.
10. **Petrol models**—disconnect the high tension wire and the distributor wire from the coil.
11. Disconnect the oil warning light wire from the oil pressure switch.
12. **Petrol models**—disconnect the mixture warning light wire from the switch on the cylinder head.
13. Disconnect the fluid outlet pipes from the brake and clutch master cylinders.
14. Disconnect the clutch jump hose at the bracket on dash.
15. Disconnect the accelerator linkage by disconnecting the control rod, at the carburetter or injection pump.
16. **Diesel models, or if fitted, 2¼ litre Petrol**—disconnect the engine hand speed control rod at the cross-shaft by removing the retaining nut and locknut.
17. If fitted, disconnect the heater water pipe hoses, disconnect the leads and remove the heater unit complete.
18. Disconnect the dynamo leads.
19. Disconnect the speedometer drive from the transfer box; release the cable from the clips on the transfer box, the chassis and the flywheel housing.
20. Disconnect the headlamp and horn wires at the junction box on the dash.
21. Part the frame and dash section of the main harness at the snap connectors.
22. **Diesel LHStg**—disconnect the additional filter pipes at the filter.
23. Check that all fuel and brake pipes, electrical leads, controls, etc are disconnected from the dash panel.
24. Remove the bolts securing the steering box support bracket to the chassis; remove the two tie bolts, plain washer and nuts fixing the dash to the chassis; remove the nuts and bolts securing the extremities of the sill panels to the dash. Lift off the dash panel complete.

### To strip the dash panel

1. Remove the steering wheel, flasher switch or horn push bracket and steering box. See Section G for details.
2. Lift off the junction box and disconnect the wiring remove the junction box from the dash.
3. Remove the clutch and brake pedal assemblies, master cylinders, pipes, return springs, fluid reservoir. Sections B and H.
4. Remove the steering column support bracket from the dash.
5. Remove the instrument panel, disconnect all instruments and lift the panel clear. See Section P for details.
6. Disconnect the wiring from the control box and the fuse box; remove the mounting plate complete with control box and fuse box.
7. **Petrol models**—disconnect the wiring from the mixture control warning light switch and remove the bracket, switch and mixture control.
8. **Diesel models**—disconnect the wires and remove the heater plug resistance.
9. **2¼ litre Petrol**—if fitted, remove the hand throttle control; if fitted, remove the engine governor control quadrant assembly.

## Operation Q1-8—*continued*

10. **Diesel models**—remove the engine hand speed control. Section P.
11. **Petrol models**—disconnect the wiring from the coil and remove the coil from the dash.
    **Early models**—after disconnecting the cables from the starter switch, screw off the starter knob and locknut. Withdraw the switch from the dash.
12. **Diesel models**—disconnect the leads and remove the starter/heater plug switch by removing the large securing nut from facia side of panel.
13. Remove accelerator linkage, Section P; detach the clutch jump hose bracket from the dash.
14. **RHStg models**—detach the pedal shaft bracket from the dash panel complete with shafts and pedals.
15. **LHStg models**—withdraw the pedal shafts complete with pedals and distance pieces.
16. **Diesel LHStg**—remove the additional filter from the dash panel.
17. Remove the dip switch, complete with leads.
18. Remove the windscreen sealing strip. Remove the windscreen fastener catches from the dash panel.
19. Remove the transfer lever instruction plates; remove the rocker shaft access plate.
20. Remove the governor cut-out panel and the pedal hole covers.
21. Remove the ventilators and operating controls. Operation
22. Remove the harness clip.
23. Remove all remaining rubber grommets and plugs; remove the steering column blanking plate and refit it on the new dash panel.
24. Transfer all the dash fittings to the new panel by reversing the removal procedure, referring to appropriate sections and connecting the wiring in accordance with the appropriate wiring diagram. Section N.

**To refit**

1. Reverse the removal procedure.
2. Connect the wiring in accordance with the appropriate wiring diagram.
3. Adjust the accelerator, mixture or cut-off control and throttle linkage by reference to appropriate sections.
4. Set the road wheels straight ahead and the steering wheel in the midway position between full lock in each direction before securing the longitudinal arm to the steering box drop arm.
5. Bleed the clutch and brake systems. Sections B and H.

## Ventilator lid, to remove and refit—Operation Q1-9

Workshop hand tools:
Spanner size: 2 BA open end
Pliers, Screwdriver (medium)

### To remove—early type

1. Remove the securing screws and remove one of the ventilator hinges.
2. Remove the securing bolts and disconnect the ventilator panel from the operating control.
3. Withdraw the ventilator. The same procedure applies to either ventilator.
4. If necessary, remove remaining hinges.
5. If necessary, remove the ventilator control.

### Late type (Fig. Q1-12)

The hinges of the late type ventilator lids are welded to the dash and the ventilator lids respectively and are therefore not available separately.

6. Remove the pin from the ventilator hinges.
7. Remove the securing bolts and disconnect the ventilator panel from the operating control.
8. Withdraw the ventilator lid. The same procedure applies to the other ventilator.
9. If necessary, remove the ventilator control.

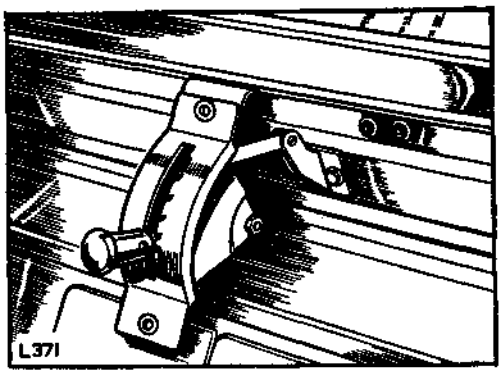


Fig. Q1-21. Ventilator control

### To refit—all types

1. Reverse the removal procedure, renewing sealing rubbers as necessary.

## Seat base, remove and refit—Operation Q1-10

Workshop hand tools:
Spanner sizes: $\frac{7}{16}$ in. AF, $\frac{9}{16}$ in. AF open end

### To remove

1. Remove the front floor. Operation Q1-6 or Q1-7.
2. Lift out the seat cushions.
3. Release the seat squab retaining straps from the support rail.

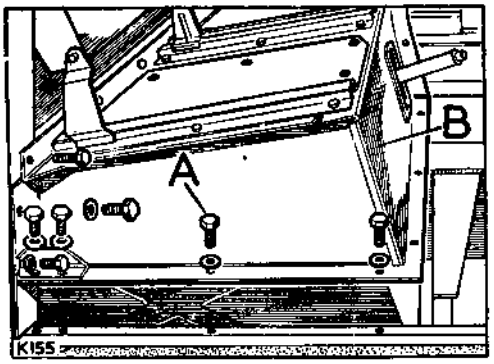


**Fig. Q1-22. Seat base**

A—Fixings (23 off) B—Seat base

4. From under the vehicle, remove the two nuts and spring washers securing the hand brake lever to the chassis.

**Note:** The foregoing operation facilitates seat base removal by allowing the hand brake lever to be manoeuvred, but is not necessary on early models fitted with a short horizontal hand brake lever.

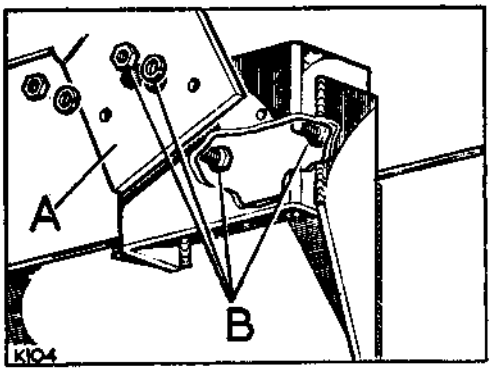


**Fig. Q1-23. Hand brake lever fixings**

A—Mounting bracket for hand brake lever
B—Fixings, hand brake lever to chassis

5. Remove the seat base fixings.
6. Lift out the seat base complete, manoeuvring the hand brake lever through the aperture in the base front.

### To refit

Reverse the removal procedure, using waterproof sealant between the joint flanges of the seat base and body. A suitable sealant is 'Sealastrip' manufactured by Expandite Ltd, Chase Road, London, NW 10.

Adjust the four-wheel drive control lever. Operation Q1-6.

## Cab, to remove and refit—Operation Q1-11

Workshop hand tools:
Spanner sizes: 2 BA, $\frac{7}{16}$ in. AF, $\frac{1}{2}$ in. AF open end and sockets
Screwdriver (medium)

Special tools:
Tool for fitting window filler strip, Part Number 262771

### Cab

**To remove**(Fig. Q-1-25)

1. Remove the nuts and bolts securing the cab at the windscreen and the nuts securing the cab at the hood sockets.
   88 models: remove the bolts, nuts and washers securing the cab to the cab mounting rail, at the rear body.
   109 models: remove the set bolts and washers securing the cab to the cab mounting brackets, at the rear body.
2. Lift off the cab complete, then remove the roof panel and sealing rubber from the rear panel.
3. Remove the draught excluders and retaining strips from the top of the front door apertures.
4. Remove the rear upper front door seals and the draught pads from the front edge of the side panels.
5. If necessary, remove the rear bottom sealing strip from the back rest panel capping.
6. If necessary, remove the sealing rubber from the front edge of the roof.
7. If necessary, remove all mounting brackets.

**To refit**

1. Reverse the removal procedure.
2. Renew the back and quarter lights as necessary.

### Cab back lights

### Sliding light

**To renew**

1. Withdraw the drive screws securing the bottom channel to the cab rear panel (the drive screws are inside the channel).
2. Remove the 'Phillips' screw, distance piece (two on RH light), special washers and tapped plate securing the catch to the back light.
3. Remove the bottom run channel and sliding back light.
4. If necessary, remove the top run channel.
5. If necessary, remove the catches from the back lights.
6. Renew the rubber sealing strips, fittings and sliding lights as necessary. Refit by reversing the removal procedure.

### Quarter light

**To renew**

1. Prise out the rubber filler strip from the glass weather strip; push the glass and weather strip from the panel aperture.
2. Square off one end of the rubber weather strip, and, starting at the bottom centre, fit the narrow groove of the strip to the panel aperture with the locking groove to the weather side.
3. Force the strip well into the aperture corners, and, allowing about one inch (25 mm) overlap, square off the other end of the moulding. Compress the moulding around its length until the ends can be joined. (This overlap is important, as otherwise a gap will appear between the moulding ends when the glass is fitted).
4. Fit the glass into the moulding, using a flat piece of metal to pull the lip over the glass.
5. Square off one end of the filler strip, and, starting opposite the joint in the moulding, insert the filler strip in the groove in the weather strip by means of the special tool, Part No. 262771. Allowing about $\frac{1}{4}$ in. (6 mm) overlap, square off the end of the filler strip, and force the overlap into the weather strip groove.

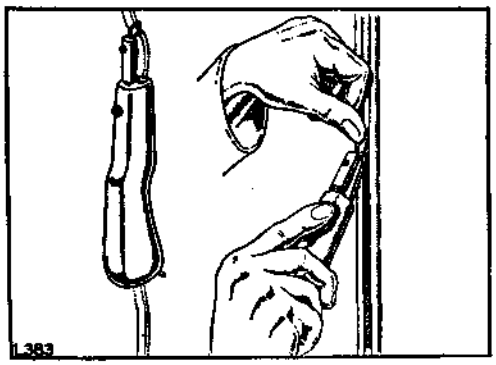


**Fig. Q1-24. Fitting filler strip in window weather strip**

### Cab tropical roof

**To remove**

1. Remove the screws, spring and plain washers, nuts, distance pieces and rubber washers securing each side of the panel to the roof.
2. Remove the screws, spring, plain and rubber washers and nuts securing the tropical panel stiffeners to the cab roof both at the front and at the back, then lift off the tropical roof panel.

**To refit**

1. Reverse the removal procedure.

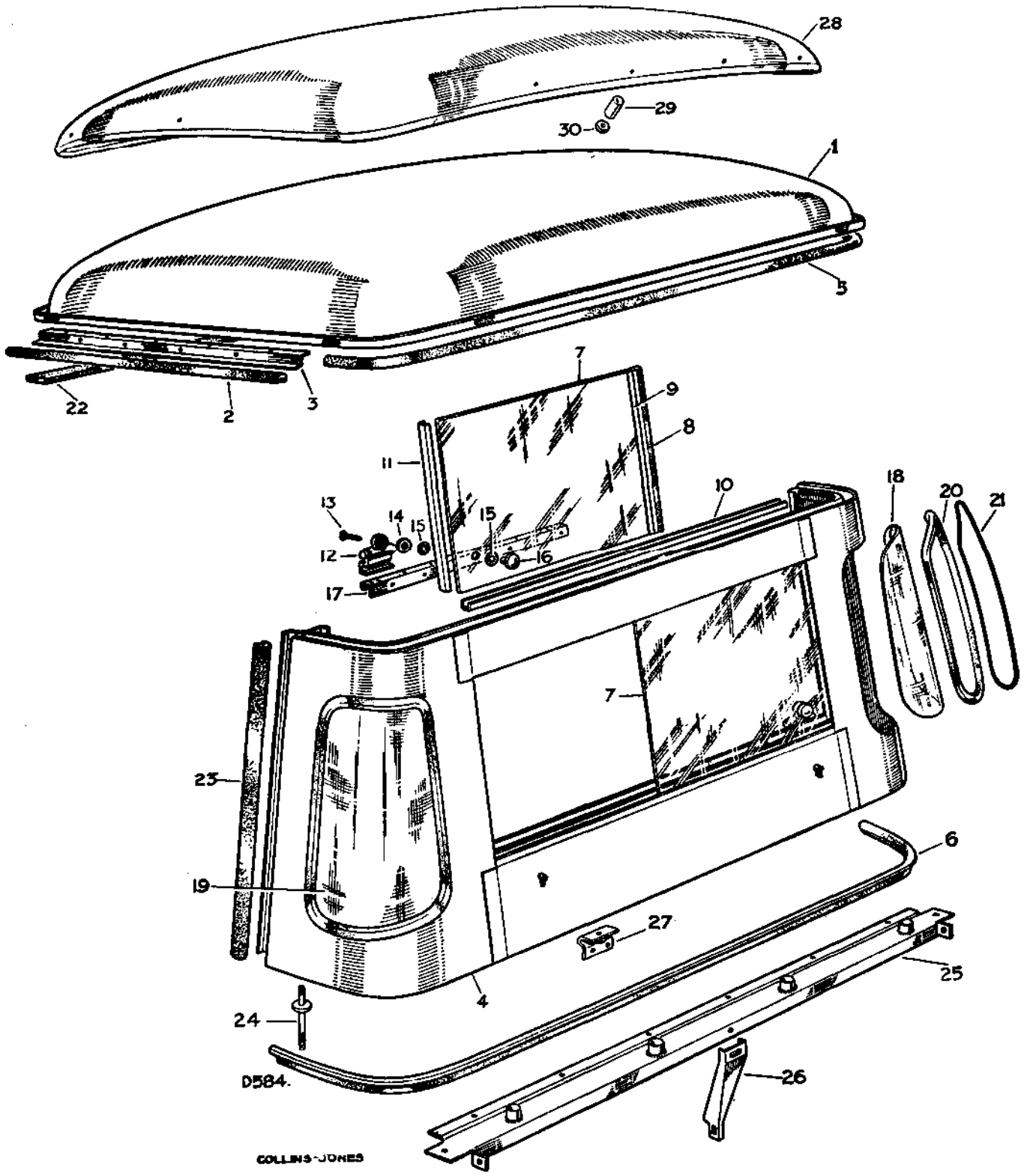


**Fig. Q1-25. Layout of cab and tropical roof**

**Key to illustration of cab and tropical roof**

1 Cab roof
2 Sealing rubber, door top
3 Retainer for seal
4 Cab rear panel assembly
5 Rubber seal, roof to back panel, top
6 Rubber seal back panel to rear body
7 Sliding back light
8 Sealing rubber for back light
9 Channel for rubber
10 Channel, top and bottom } For back light
11 Channel, sides } For back light
12 Back light catch
13–16 Fixings for catches
17 Runner for sliding back light catch
18 Cab quarter light, RH
19 Cab quarter light, LH
20 Weather strip } For quarter light
21 Sealing strip } For quarter light
22 Sealing rubber, windscreen to roof
23 Sealing rubber, door side
24 Mounting stud
25 Mounting rail for cab
26 Mounting rail support bracket
27 Cab mounting distance piece
28 Cab tropical roof panel
29 Distance piece } Fixing tropical roof panel to cab roof
30 Rubber } Fixing tropical roof panel to cab roof

## Hard top, remove and refit—Operation Q1-12

Workshop hand tools:
Spanner sizes: 2 BA, $\frac{7}{16}$ in. AF, $\frac{1}{2}$ in. AF open end
Screwdriver (medium)

Special tools:
Tool for fitting window filler strip, Part Number 262771

### Hard top

**To remove** (Fig. Q1-26)

1. Remove the nuts, bolts and washers securing the hard top to the windscreen.
2. Remove the set bolts securing the hard top to the front mounting bracket.
3. Remove the nuts, bolts and washers securing the hard top to the centre mounting brackets.
4. Remove the nuts and washers securing the hard top to the rear hood sockets.
5. Remove the nuts, bolts and washers securing the rear mounting brackets to the body. Lift off the hard top complete.

### Rear lid

**Early type**

6. Remove the rear lid by removing the nuts, bolts and washers securing the stays to the side panels, withdraw the split pins and remove the hinge pins. Lift off lid.
7. Remove stays and hinge leaves by removing the securing bolts and washers; if necessary remove glass, as described for the cab quarter light. Operation Q1-11. To remove the lid lock, remove the inner handle by depressing the spring-loaded boss and push out the locking pin.

**Late type**

8. Remove the rear lid by withdrawing the hinge pins. If necessary remove the split pins securing the stays and remove.
9. If necessary, remove the stay support mounting brackets from the side panels. To remove the lid lock, remove the inner handle by depressing the spring-loaded boss and push out the locking pin.
10. Remove the handle, boss, cap and spring. Withdraw the screws, spring and plain washers and nuts securing the lock to the lid panel; remove the bolts and plain washers securing the bolt guides to the lid panel; remove the outer handle and lift off the lock complete.
11. If necessary, remove the lock bolt sockets from the side panels by removing the securing nuts and bolts. If necessary, remove the rubber seal and retainer from the lower edge of the lid.

### Roof panel

8. Remove the roof panel by removing the nuts, bolts and washers securing it to the side panels If necessary, remove the rubber seal.

### Side panels

9. If necessary, remove the glasses. Operation Q1-11.
10. If necessary, remove the seals and retaining strips

### To refit

1. Reverse the removal procedure.
2. If removed, replace or renew the seals and retaining strips.
3. If removed, replace or renew the glasses. Operation Q1-11.
4. On assembly of the door handle, it will be necessary to adjust the position of the bolts by slackening the locking nuts, to obtain adequate entry into the sockets.

### Hard top window glass

**To renew**

As some difficulty may be experienced in carrying out this operation, it will be found advantageous, where possible, to remove the panel in which the glass is to be fitted, and lay it flat on a suitable bench or stand.

1. See Operation Q1-11.

## Operation Q1-12—*continued*

**Hard top tropical roof**

**To remove**

1. Remove the screws, spring and plain washers, nuts, distance pieces and rubber washers securing each side of the panel to the roof.
2. Remove the screws, spring, plain and rubber washers and nuts securing the tropical panel stiffeners to the hard top roof, both at the front and at the back.
3. Remove the drive screws or shear the pop rivets securing the panel to the hard top stiffeners, and lift off the tropical roof panel.

**To refit**

1. Reverse the removal procedure.

**Tailboard**

**To remove and refit**

1. Release the tailboard keys and drop the tailboard.
2. Unhook the tailboard chains; remove the plain washer, spring washer and split pin from the RH hinge pin and slide out the tailboard to the left.
3. If necessary, remove the tailboard hinges and the chain hooks.
4. Refit by reversing items 1 to 3.

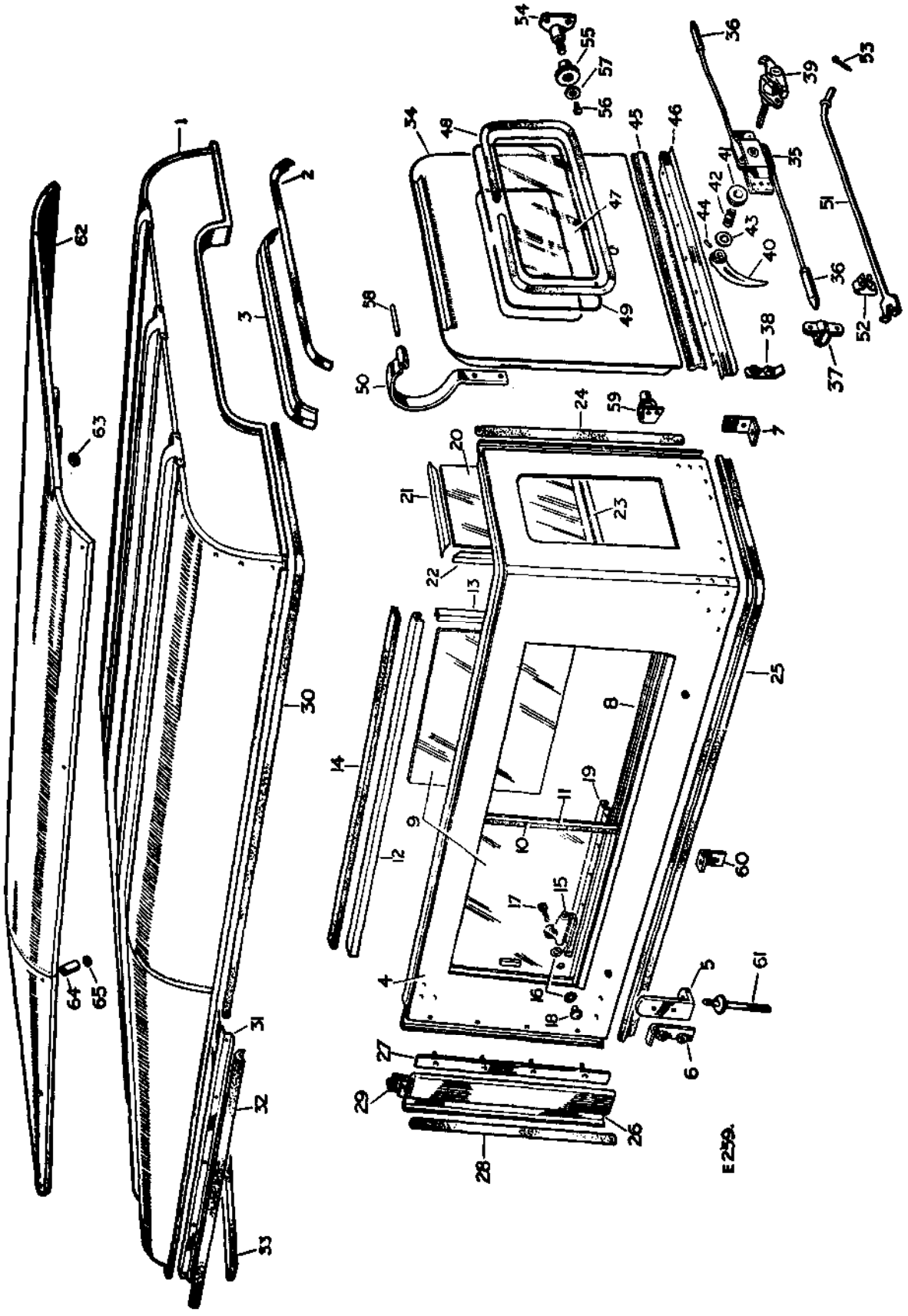


Fig. Q1-26. Layout of hard top with sliding windows

**Key to illustration of hard top with sliding windows**

1 Cab roof assembly
2 Rubber seal for roof, rear
3 Seal retainer for roof, rear
4 Side panel assembly, LH
5 Mounting bracket front
6 Nut plate—fixing mounting bracket to body
7 Support bracket at tailboard
8 Drain channel complete for side windows
9 Glass for side window, sliding
10 Sealing rubber for sliding light
11 Channel for sliding light rubber
12 Channel for sliding light, top
13 Channel for sliding light, sides
14 Packing strip for top channel
15 Catch for sliding glass, front
16 Washer for catch
17 Screw fixing front catch
18 Tapped plate for catch
19 Runner for sliding catch
20 Glass for rear end window
21 Retainer for rear end glass upper LH
22 Retainer for rear end glass inner and outer
23 Retainer for rear end glass lower LH
24 Rubber seal for rear lid, side
25 Rubber sealing strip, lower edge to body
26 Capping for front door rear seal, LH
27 Stud plate—fixing cappings to side panel
28 Seal for front door, upper, side
29 Rubber seal at door pillar top and bottom
30 Rubber seal, roof to side
31 Seal retainer for door top, LH
32 Sealing rubber for door top
33 Sealing rubber, windscreen to roof
34 Rear lid assembly
35 Lock complete for rear lid
36 Bolt end for lock
37 Guide for rear lid lock
38 Nut plate
39 Handle for rear lid, outer, locking
40 Handle for rear lid, inner
41 Boss
42 Coil spring
43 Cup for coil spring
44 Locking pin
} Fixing handle
45 Rubber seal for rear lid, bottom
46 Retainer for bottom seal
47 Glass for rear lid
48 Weather strip for back light
49 Seal strip for weather strip
50 Hinge leaf for rear lid
51 Stay for rear lid, RH
52 Spring clip for rear lid stay
53 Split pin fixing rear lid stay to support
54 Mounting bracket for stay support
55 Locking nut for mounting bracket
56 Screw
57 Plain washer
} Retaining locking nut
58 Pin for rear lid hinge
59 Socket for rear lid lock bolt, LH
60 Support bracket, centre, body side
61 Mounting stud—fixing hard top to body
62 Tropical roof panel
63 Rubber washer—fixing panel to roof at end of stiffener
64 Distance piece
65 Rubber washer
} Fixing roof to panel at sides

## Rear body, remove and refit—Operation Q1-13

Workshop hand tools:
Spanner sizes: 2 BA, 4 BA, $\frac{7}{16}$ in. AF, $\frac{1}{2}$ in. AF open end and sockets
Screwdriver (medium)

**To remove** (Figs. Q1-27 and Q1-28)

1. Remove the hood and hood sticks or the hard top.
2. Remove the spare wheel if fitted in the rear body.
3. **88 models:** remove the seat cushions.
4. **109 models:** tilt forward the squabs.
5. Disconnect the fuel filler and breather hoses.
6. Remove the bolts, washers and nuts securing the rear body to the seat base.
7. Remove the bolts securing the sill channel mounting bracket to the seat base and rear body.
8. Detach the nuts and bolts securing the rear sill panel to the body.
9. **88 models:** detach the wing stays from the chassis members.
10. Remove the nuts and bolts securing the body to the rear cross-member mounting brackets.
11. Remove the rear body complete.
12. If necessary, remove all serviceable parts for fitment to new body.

**To refit**

1. Reverse the removal procedure.

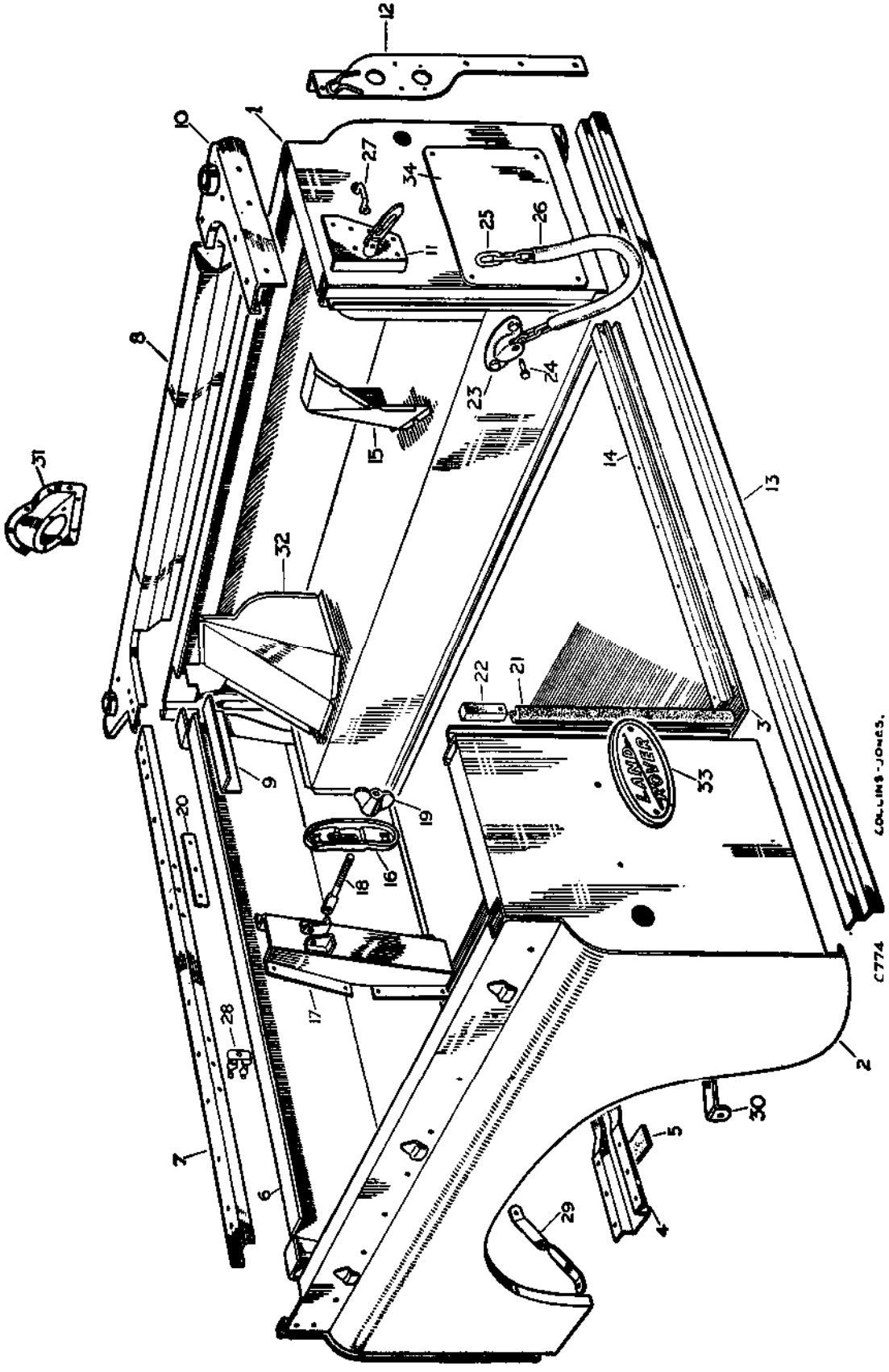


Fig. Q1-27. Layout of rear body unit, 88 models

**Key to illustration of rear body unit, 88 models**

1 Side and wheelarch complete RH
2 Side and wheelarch complete LH
3 Rear floor complete
4 Rear floor cross-member and pads
5 Rear floor cross-member mounting pad
6 Rear body front panel
7 Body front panel capping
8 Body top side capping
9 Corner strengthening angle
10 Hood socket complete, rear corner
11 Corner bracket and tailboard cotter
12 Rear protection angle
13 Rear mounting angle
14 Protecting strip at rear of floor
15 Cover panel for rear lamps
16 Spare wheel clamp
17 Clamp reinforcement bracket
18 Spare wheel clamp tie bar
19 Wing nut, fixing spare wheel clamp
20 Spare wheel rubbing strip
21 Tailboard sealing rubber
22 Tailboard rubber buffer
23 Tailboard chain bracket
24 Pin, fixing tailboard chain to bracket
25 Tailboard chain
26 Sleeve for chain
27 Hood strap staple
28 Starting handle and jack handle clip
29 Rear wing stay, front
30 Rear wing stay, rear
31 Fuel filler cowl
32 Fuel filler cover plate
33 'Land-Rover' name plate
34 Registration plate

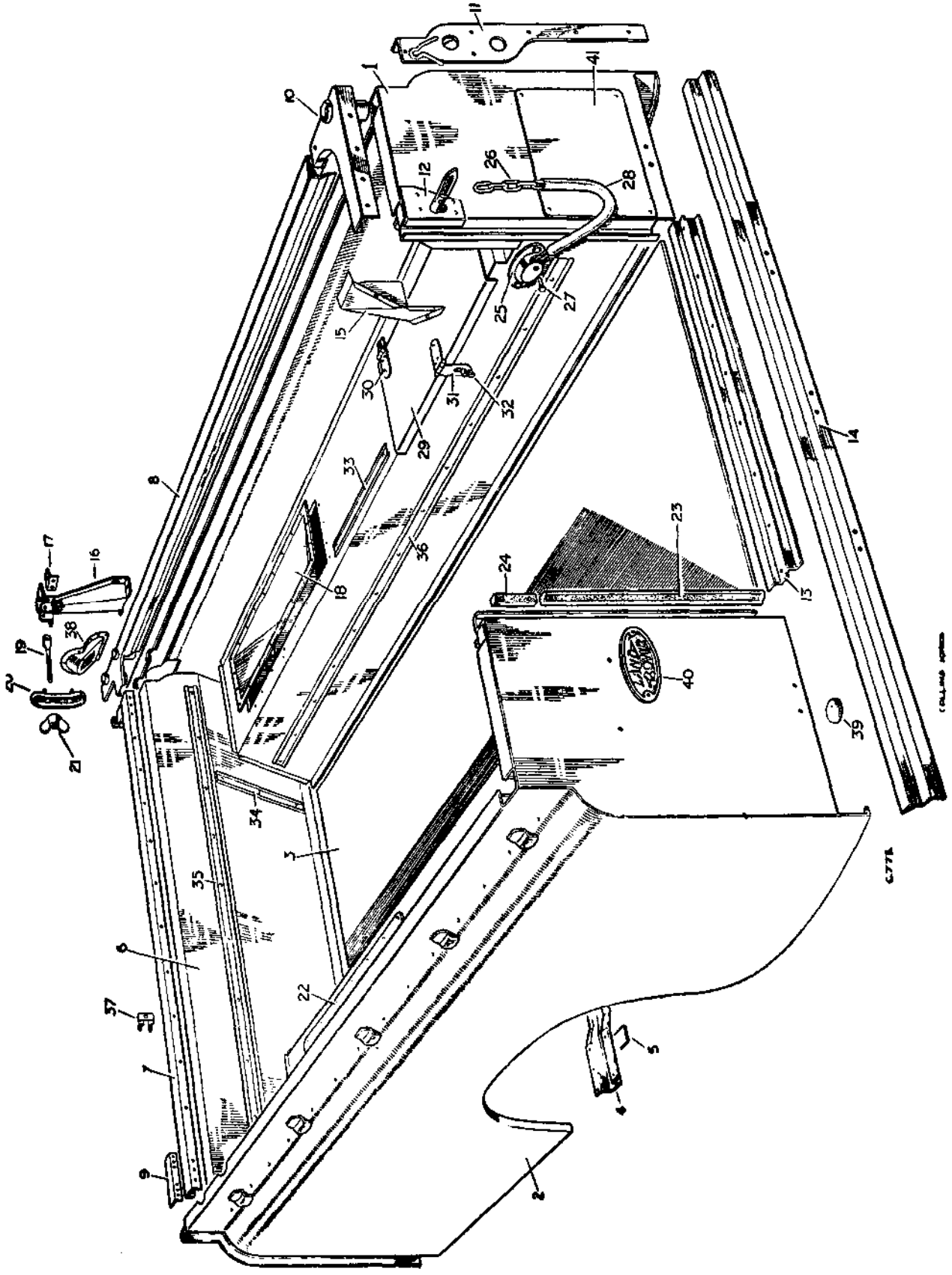

Fig. Q1-28. Layout of rear body unit, 109 models

**Key to illustration of rear body unit, 109 models**

1 Side and wheelarch complete RH
2 Side and wheelarch complete LH
3 Rear floor complete
4 Rear floor cross-member and pads
5 Rear floor cross-member mounting pad
6 Rear body front panel
7 Rear body front panel capping
8 Body top side capping
9 Corner strengthening angle
10 Hood socket complete, rear corner
11 Rear protection angle
12 Corner bracket and tailboard cotter
13 Protecting strip at rear of floor
14 Rear mounting angle
15 Rear lamp cover panel
16 Spare wheel mounting strengthening member
17 Nut plate
18 Spare wheel housing
19 Spare wheel clamp tie bar
20 Spare wheel clamp
21 Wing nut, fixing spare wheel clamp
22 Cover plate
23 Tailboard sealing rubber
24 Tailboard rubber buffer
25 Tailboard chain bracket
26 Tailboard chain
27 Clevis pin, fixing chain to bracket
28 Sleeve for chain
29 Wheelarch box locker lid
30 Locker lid hinge
31 Locker lid hasp
32 Locker lid turnbuckle
33 Tread plate, wheelarch box top
34 Tread plate, vertical, front panel
35 Tread plate, horizontal, front panel
36 Tread plate for rear floor and wheelarch box sides
37 Starting handle and jack handle clip
38 Fuel filler cover plate
39 Rubber grommet, wheelarch, locker access hole
40 'Land-Rover' nameplate
41 Registration plate

## Station wagon top, to remove and refit—Operation Q1-14

Workshop hand tools:
Spanner sizes: 2 BA, $\frac{7}{16}$ in. AF, $\frac{1}{2}$ in. AF open end
Screwdriver (medium)

Special tools:
Tool for fitting window filler strip, Part Number 262771

**To remove** (Figs Q1-29, Q1-30 and Q1-31)

1. Remove the rear door.
2. Remove the upper trim.
3. Remove the nuts, bolts and washers securing the hard top to the windscreen.
4. 109 models with four side doors—Remove the bolts securing the hard top to the door pillar.
5. Remove the set bolts securing the hard top to the front mounting bracket.
6. Remove the nuts, bolts and washers securing the hard top to the centre mounting brackets.
7. Remove the nuts and washers securing the hard top to the rear hood sockets.
8. Remove the nuts, bolts and washers securing the rear mounting brackets to the body. Lift off the hard top complete.

**Roof panel**

9. Remove the roof panel by removing the nuts, bolts and washers securing it to the side panels. If necessary, remove the rubber seal.

**Side panels**

10. If necessary, remove the glasses as described for the cab. Operation Q1-11.
11. If necessary, remove the seals and retaining strips.

**To refit**

1. Reverse the removal procedure.
2. If removed, replace or renew the seals and retaining strips.
3. If removed, replace or renew the glasses. Operation Q1-11.
4. On assembly of the door handle, it will be necessary to adjust the position of the bolts by slackening the locking nuts, to obtain adequate entry into the sockets.

**Hard top tropical roof**

**To remove**

1. Remove the screws, spring and plain washers, nuts, distance pieces and rubber washers securing each side of the panel to the roof.
2. Remove the screws, spring, plain and rubber washers and nuts securing the tropical panel stiffeners to the hard top roof, both at the front and at the back.
3. Remove the drive screws or shear the pop rivets securing the panel to the hard top stiffeners, and lift off the tropical roof panel.

**To refit**

1. Reverse the removal procedure.

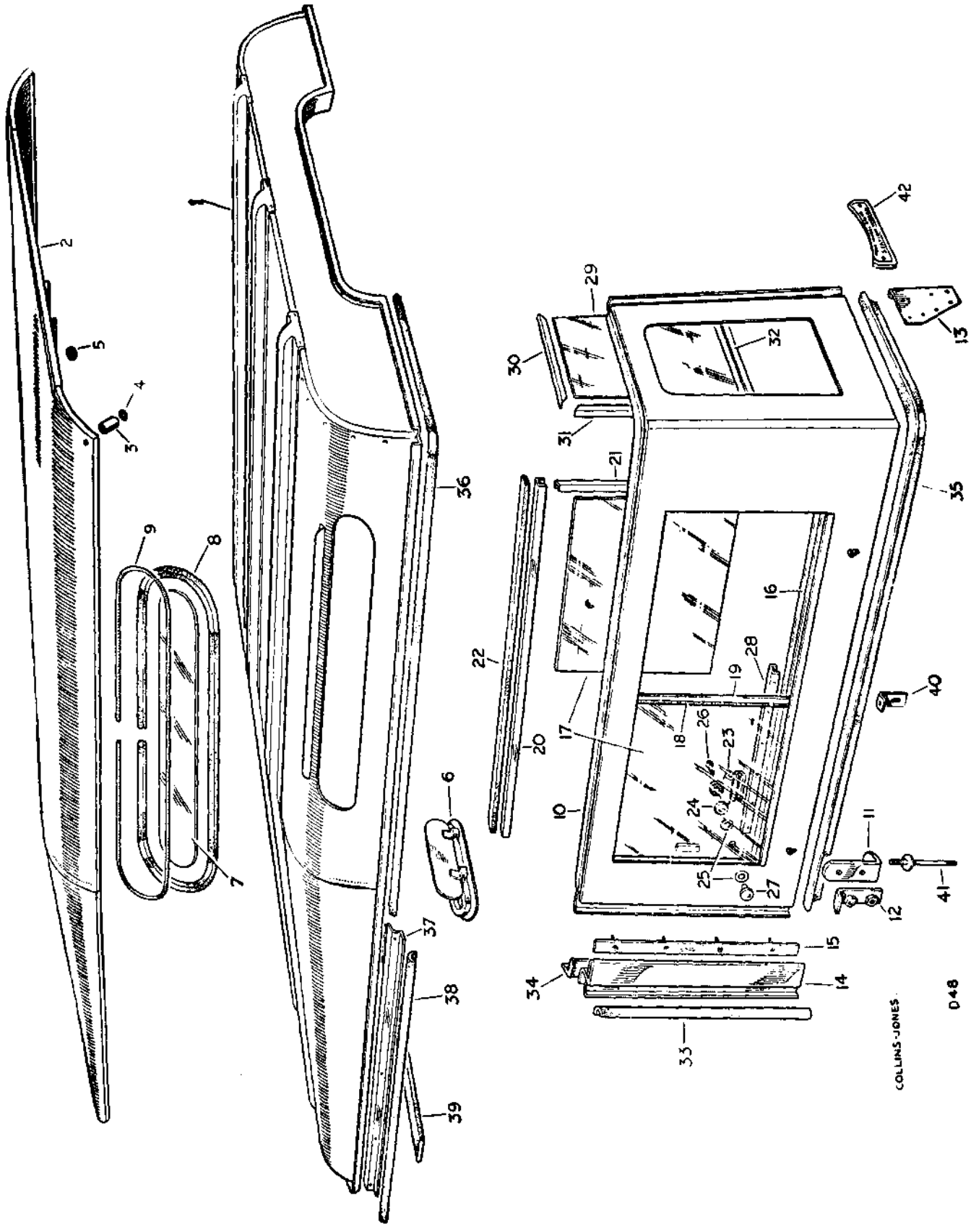


Fig. Q1-29. Layout of roof and body side panels, 88 Staton Wagon

**Key to illustration of roof and body side panels, 88 Station Wagon**

1 Roof and tropical roof panel assembly
2 Tropical roof panel
3 Distance piece
4 Rubber washer
5 Rubber washer
6 Roof ventilator, front
7 Side light for roof
8 Weather strip for side light
9 Filler strip for weather strip
10 Side panel assembly, LH
11 Mounting bracket front
12 Nut plate
14 Capping for front door rear seal LH
15 Stud plate
16 Drain channel complete for side windows
17 Glass for side window, sliding
18 Sealing rubber for sliding light
19 Channel for sliding light rubber
20 Channel for sliding light—top
21 Channel for sliding light—sides
22 Packing strip for top channel
23 Catch for sliding glass, front, overall length 1½ in.
24 Distance piece for catch
25 Washer for catch
26 Screw (2 BA x ⅞ in. long)
27 Tapped plate for catch
28 Runner for sliding catch
29 Glass for rear end window
30 Retainer for rear end glass upper LH
31 Retainer for rear end glass inner and outer
32 Retainer for rear end glass lower LH
33 Seal for front door, upper side
34 Seal at top and bottom for front door, upper side
35 Sealing rubber, lower edge to body
36 Sealing rubber, RH
37 Retainer for front door seal top LH
38 Seal for front door top
39 Rubber seal for canopy
40 Support bracket, centre, body side
41 Mounting stud
42 'Station Wagon' name plate, front and rear

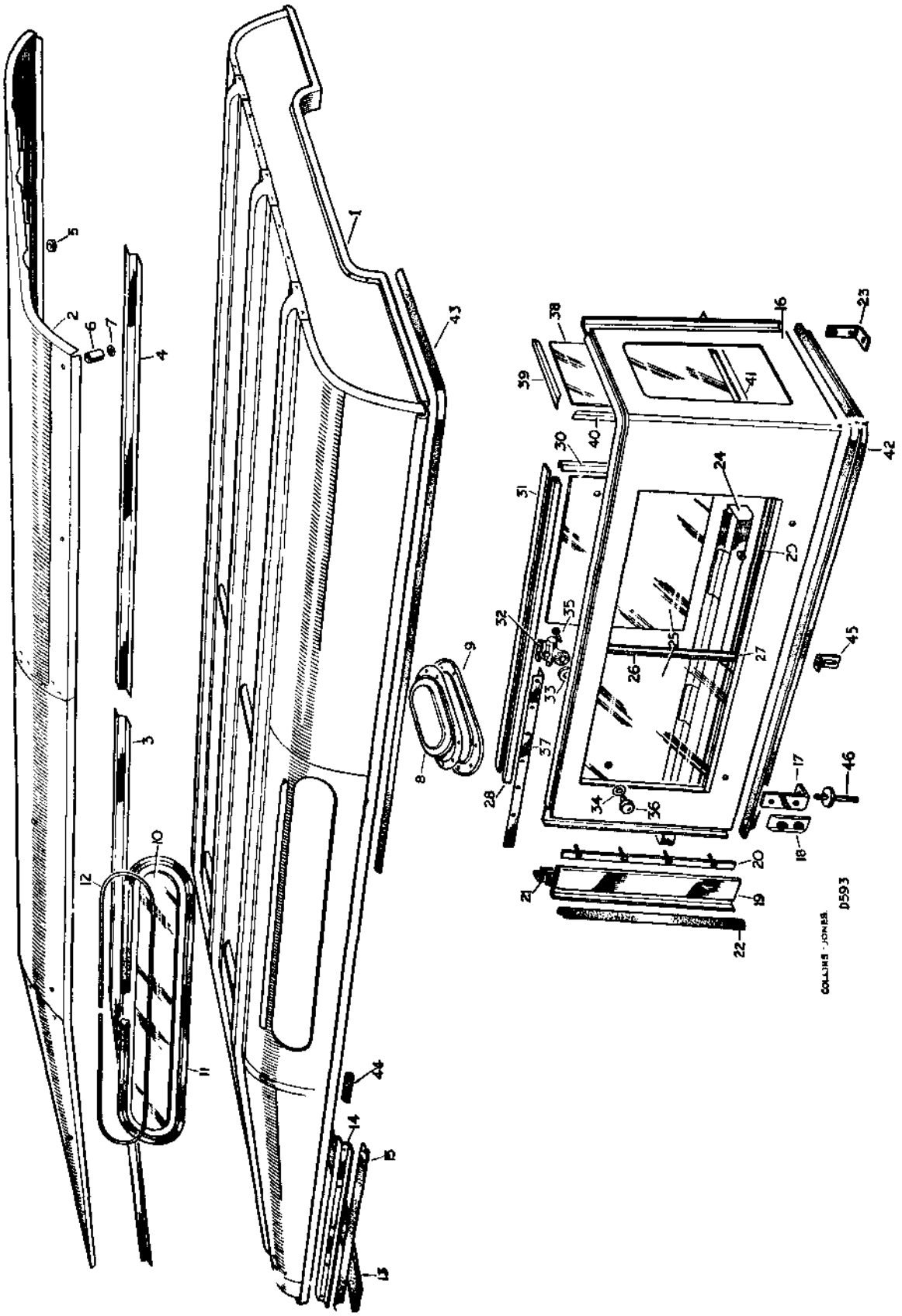


Fig. Q1-30. Layout of roof and body side panels, 109 Station Wagon

**Key to illustration of roof and body side panels, 109 Station Wagon**

1 Roof complete
2 Tropical roof panel assembly
3 Stiffener, front } For
4 Stiffener, rear } roof panel
5 Rubber washer
6 Distance piece
7 Rubber washer
8 Roof ventilator
9 Retainer for roof trim at ventilator
10 Roof side light glass
11 Weather strip for glass
12 Filler strip for weather strip
13 Sealing rubber for roof to windscreen
14 Seal retainer for door top, LH front
15 Seal for retainer
16 Side panel assembly, LH
17 Mounting bracket front
18 Nut plate
19 Capping for 'D' post, LH
20 Stud plate
21 Sealing rubber at top and bottom, upper side, 'D' post pillar
22 Door sealing rubber at 'D' post, upper side
23 Support bracket at tailboard
24 Drain channel complete for side window
25 Glass for side window, sliding
26 Sealing rubber for sliding light
27 Retainer for sliding light rubber
28 Channel for sliding light, top
29 Channel for sliding light, bottom outer
30 Channel for sliding light, side
31 Packing strip for top channel
32 Catch for sliding glass, front overall length 1½ in.
33 Distance piece for catch
34 Washer for catch
35 Screw (2 BA x ⅞ in. long)
36 Tapped plate for catch
37 Runner for sliding catch
38 Glass for rear end window
39 Retainer for rear end glass, upper LH
40 Retainer for rear end glass, inner and outer
41 Retainer for rear end glass, lower LH
42 Sealing rubber, upper to lower body side
43 Sealing rubber, RH
44 Rubber seal, 'BC' post to roof
45 Support bracket, centre body side
46 Mounting stud (⅝ UNF)

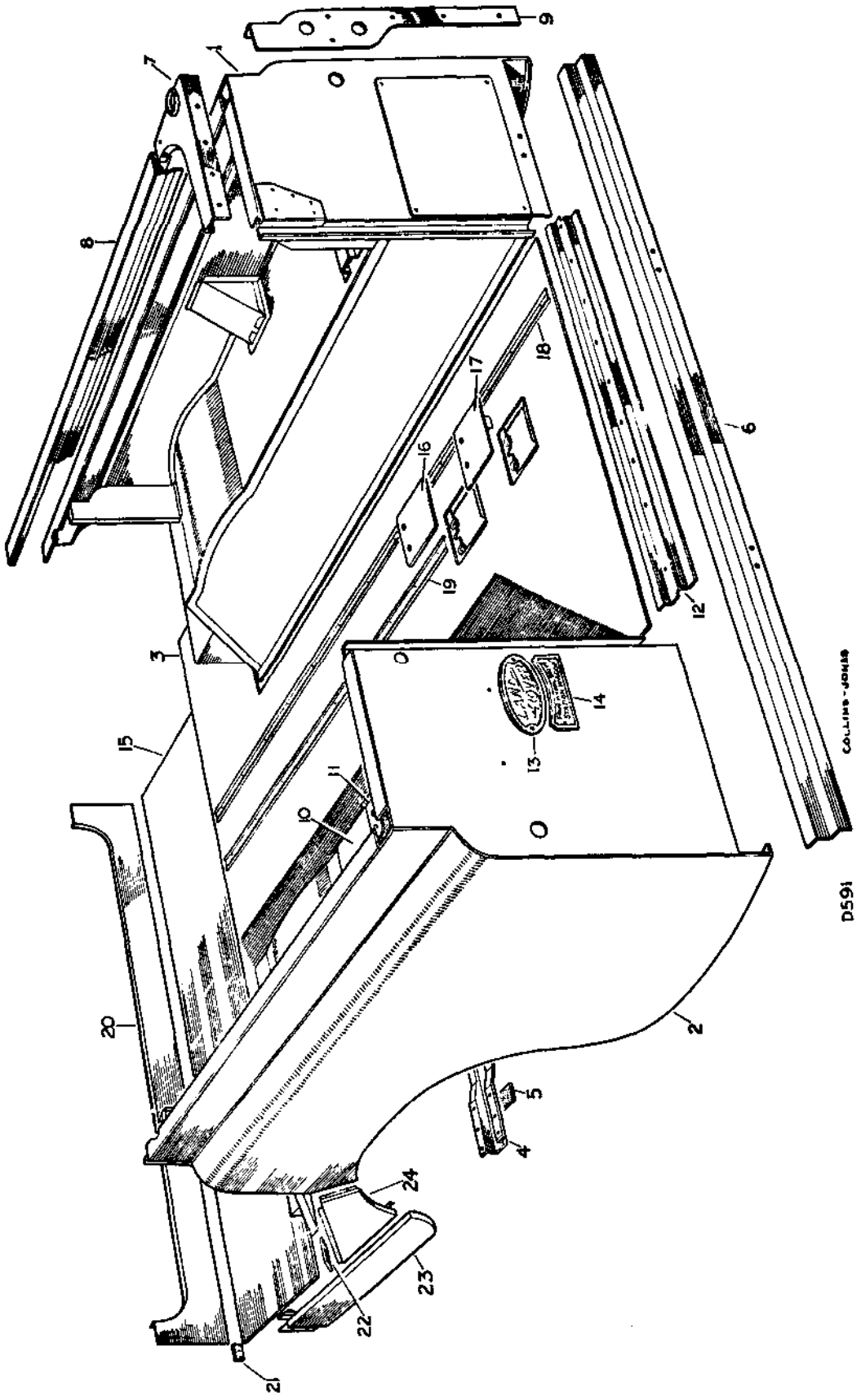


Fig. Q1-31. Layout of rear body, 109 Station Wagon

**Key to illustration of rear body for 109 Station Wagon**

1 Body side and wheelarch complete, RH
2 Body side and wheelarch complete, LH
3 Rear floor
4 Cross member and pads for rear floor
5 Mounting pad for rear floor cross member
6 Rear mounting angle
7 Rear corner capping, RH
8 Capping for body top side, RH
9 Rear corner protection angle, RH
10 Lid for rear tool locker
11 Hinge complete
12 Retainer for floor mat, rear end
13 'Land-Rover' nameplate
14 'Station Wagon' nameplate
15 Intermediate floor for rear body
16 Cover plate for fuel tank, front
17 Cover plate for fuel tank, rear
18 Tread plate
20 Toe panel complete
21 Sealing rubber, 'BC' post to toe panel
22 Sealing rubber, 'D' post to wheelarch front flange
23 Sill panel, rear, LH
24 Body side lower front extension, LH

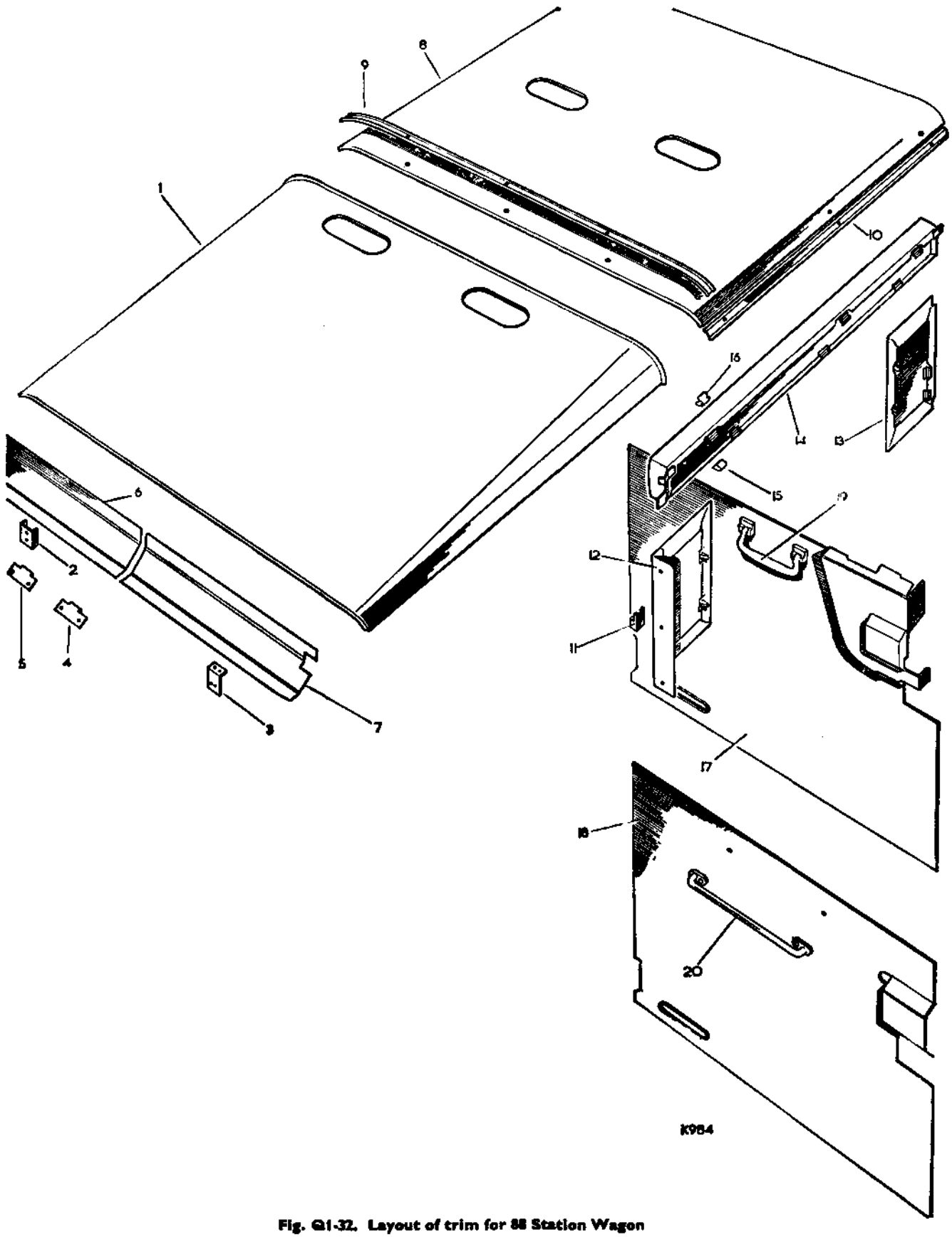


**Fig. Q1-32. Layout of trim for 88 Station Wagon**

**Key to illustration of trim for 88 Station Wagon**

1 Roof trim, front portion
2 Bracket, cant rail to roof frame
3 Bracket for roof trim, front portion
4 Centre bracket, canopy panel
5 Outer bracket, canopy panel
6 Canopy trim panel, RH
7 Canopy trim panel LH
8 Head cloth, rear portion
9 Fixing strip, head cloth, front and rear
10 Side rail, head cloth, rear portion
11 Fixing bracket, RH, sidelight casing, front
12 Sidelight casing, trimmed LH, front
13 Sidelight casing, trimmed, LH rear
14 Roll trim for cant rail, LH
15 Retaining Clip } Fixing
16 Edge clip } roll trim
17 Rear door trim casing, GREY
18 Rear door trim casing, GREY
19 Door pull handle
20 Door grab handle

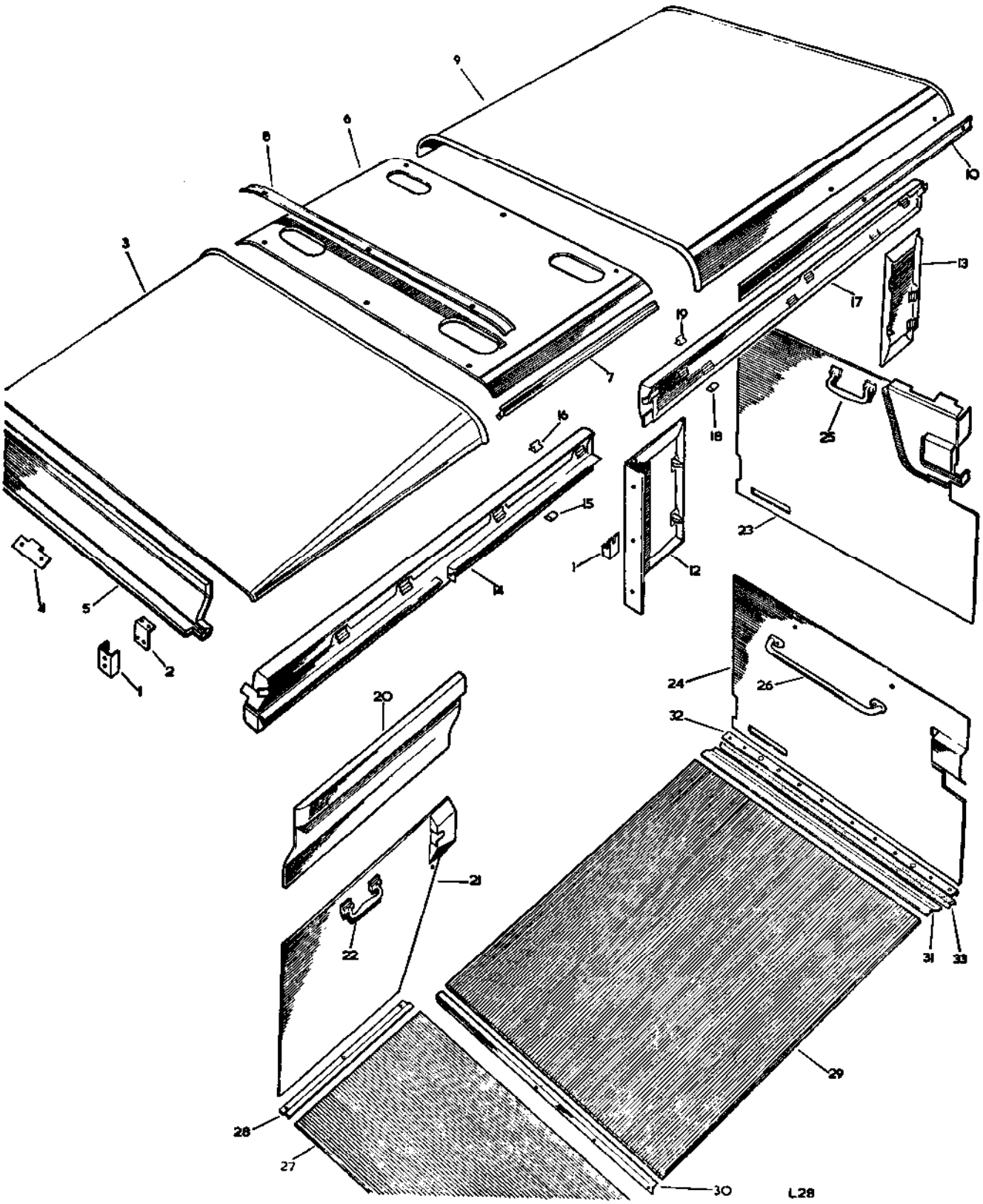


**Fig. Q1-33. Layout of trim for 109 Station Wagon**

**Key to illustration of trim for 109 Station Wagon**

1 Bracket, cant rail to roof frame
2 Bracket for roof trim, front portion
3 Roof trim, front portion
4 Centre bracket for canopy trim panel
5 Canopy trim panel
6 Headcloth, intermediate
7 Side rail for intermediate headcloth
8 Fixing strip for intermediate headcloth
9 Headcloth, rear
10 Side strip for rear headcloth
11 Fixing bracket, RH sidelight casing, front
12 Sidelight casing, front, LH
13 Sidelight casing, rear, LH
14 Roll trim, cant rail, LH front
15 Retaining clip } Fixing roll trim
16 Edge clip }
17 Roll trim, cant rail, LH rear
18 Retaining clip } Fixing roll trim
19 Edge clip }
20 Door trim upper, centre, RH
21 Door trim lower, centre, RH
22 Door pull handle for rear side door
23 Rear door trim casing
24 Rear door trim casing
25 Door pull handle for rear door
26 Door grab handle
27 Intermediate floor rubber mat
28 Retainer for floor mat, intermediate
29 Rear floor rubber mat
30 Retainer for rear floor mat, front end
31 Retainer for seal and rear floor mat, rear end
32 Protection strip for rear door, bottom
33 Sealing rubber for rear door, bottom

## Rear door, remove and refit—Operation Q1-15

Workshop hand tools:
Spanner sizes: 2 BA, $\frac{7}{16}$ in. AF, $\frac{1}{2}$ in. AF, $\frac{5}{8}$ in. AF open end
Screwdriver (medium), Pliers

Special tools:
Tool for locking door handle, Part Number 248877 (early type private locks only)

### To remove (Fig. Q1-34)

1. If fitted, remove the spare wheel from the rear door.
2. Disconnect the door check strap.
3. Remove the bolts, washers and nuts securing the hinges to the door.
4. Remove the door.

### To refit

1. Reverse the removal procedure, renewing sealing rubbers as necessary.

### Hinge

### To remove

1. The hinges may be stripped by prising back the lock washer tab and removing the special nut and bolt. Care must be taken to ensure that the cone and spring are not lost.

### To refit

1. Fit a new lock washer and assemble by reversing the removal procedure.
   Adjust by increasing or lessening the load on the spring by tightening or slackening the special nut, and bend lock tab over to secure assembly.

### Door lock

### To renew

1. Remove the door trim.
2. Remove the door lock from the door.
3. If required, remove the striking plate from its support bracket.
4. Renew the lock and plate as necessary and refit by reversing items 1 and 2.
5. Adjust the position of the striking plate as necessary, so that the door draught excluders are slightly compressed.

### Rear door glass

If required, remove and refit the window glass as described for the cab. Operation Q1-11.

### Spare wheel carrier

### To remove

1. Remove the spare wheel from the carrier.
2. Remove the door trim.
3. Remove the nuts securing the 'U' bolt, and the screws, nuts and washers securing the wheel stud plate and clamp plate to the door.

### To refit

Reverse the removal procedure.

### Step for door

### To remove

1. Disconnect the return spring from the step.
2. Remove the washer and split pin from one end of the hinge pin, withdraw the hinge pin and step.
3. If required, remove the rivets and screws retaining the mat for the step.

### To refit

Reverse the removal procedure.

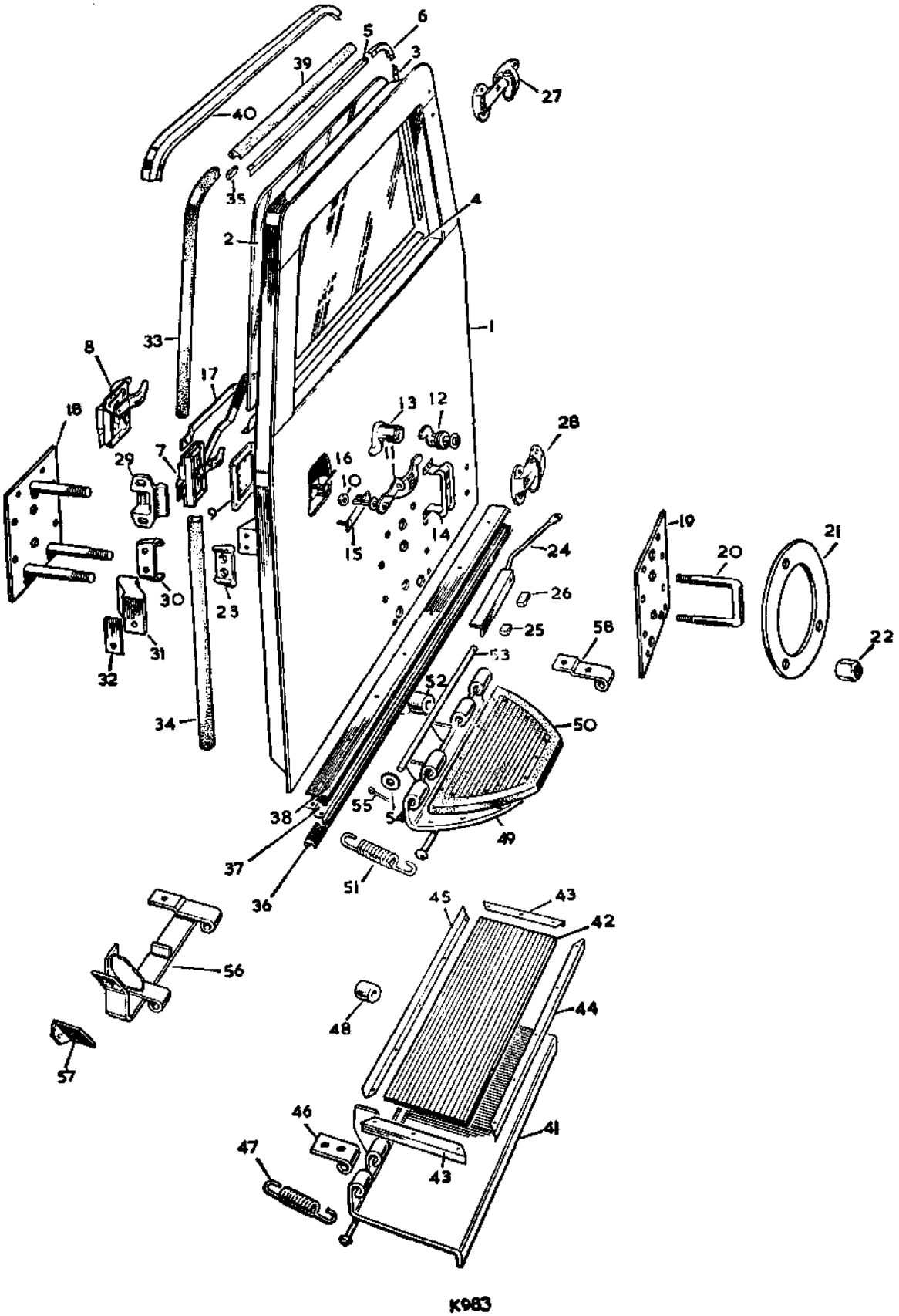


Fig. Q1-34. Layout of rear door, 88 and 109 models

**Key to illustration of rear door, 88 and 109 models**

1 Rear door
2 Glass for rear door
3 Retainer for glass, vertical
4 Retainer for glass, bottom
5 Retainer for glass, top
6 Retainer for glass, corners
7 Door lock, mounting and handle assembly
8 Door lock, mounting and handle assembly
9 Mounting plate for door lock
10 Washer, handle to cover
11 Door handle with lock
12 Barrel lock
13 Barrel lock
14 Bracket for door handle
15 Stud plate, door lock, bottom
16 Locking pillar for catch
17 Waist rail lock handle protection strip
18 Wheel stud plate
19 Clamp plate for spare wheel stud Plate
20 'U' bolt for spare wheel support
21 Retaining plate for spare wheel
22 Hub nut fixing wheel and retaining plate to 'U' bolt
23 Male dovetail
24 Rod for check strap
25 Buffer for check strap, short
26 Buffer for check strap, long
27 Hinge for rear door, upper
28 Hinge for rear door, lower
29 Striking plate
30 Female dovetail
31 Spacer
32 Shim
33 Seal for door sides
34 Seal for door side, LH bottom
35 End filler for seals
36 Seal for rear door, bottom
37 Retainer fixing seal to rear door, bottom
38 Protection strip for rear door, bottom
39 Seal for rear door, top
40 Retainer for rear door seal, top
41 Rear step
42 Rubber mat for step
43 Retainer for rear step, side
44 Retainer for rear step mat, front
45 Retainer for rear step mat, rear
46 Hinge, centre for rear step
47 Spring for rear step
48 Buffer for rear step
49 Rear step
50 Rubber mat for rear step
51 Spring for rear step
52 Buffer for rear step
53 Hinge pin for rear step
54 Plain washer } Fixing
55 Split pin } hinge pin
56 Support bracket and hinge centre, LH
57 Anchor bracket for spring
58 Hinge, centre RH

## Safety harness, remove and refit—Operation Q1-16

Workshop hand tools:
Spanner size: $\frac{7}{16}$ in. AF, $\frac{11}{16}$ in. AF open end and socket
Screwdriver (medium)

### To remove

Ensure hands are clean before handling seat straps.

1. Remove the bolt and washer securing the harness at the sill bracket.
2. Remove the nuts and bolts from the harness shackles at the bulkhead.
3. 109 Station wagon—Remove the nuts and bolt from the harness shackle at the 'BC' post.
4. Withdraw the safety harness from the vehicle.
5. Remove the sill bracket and shackle bolts as required.

### To refit

1. Fit the adjusting buckle to the sill bracket.

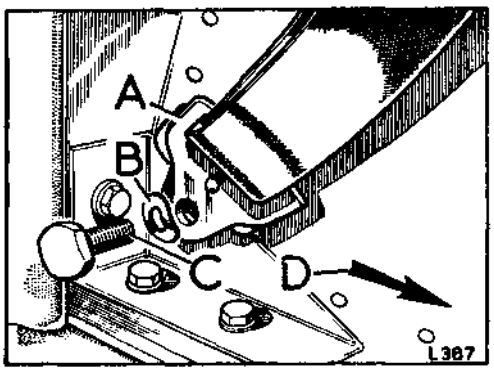


**Fig. Q1-35. Showing diagonal strap buckle fitting to sill bracket, right-hand illustrated**

A—Adjusting buckle
B—Wave washer
C—Screw fixing buckle
D—To front of vehicle

Release the two outer front seat squabs and pull forward giving access to safety harness fixing points.

Remove the shackle bolt 'G' from the shackle end 'B' of diagonal shoulder strap 'C' secured with bolt 'A' and locking nut 'D' as illustrated.

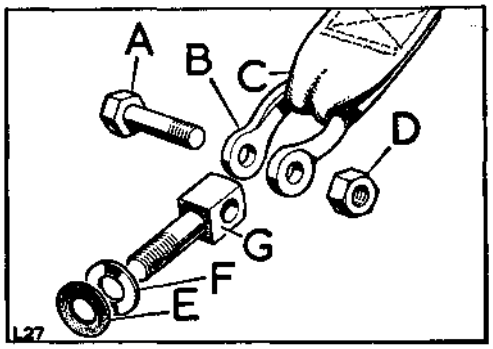


**Fig. Q1-36. Shackle end fixings, diagonal and tongue strap ends**

A—Bolt
B—Shackle
C—Strap
D—Nut
E—Rubber washer
F—Plain washer
G—Shackle bolt

4. Screw the shackle bolt into the tapped hole in lower bulkhead panel position using rubber washer and plain washer. Tighten the shackle bolt so that it is located as illustrated. The rubber washer allows the shackle bolt to be correctly aligned. Do not over-tighten.
5. Fit the tongue strap shackle to shackle bolt and secure with bolt and nut.

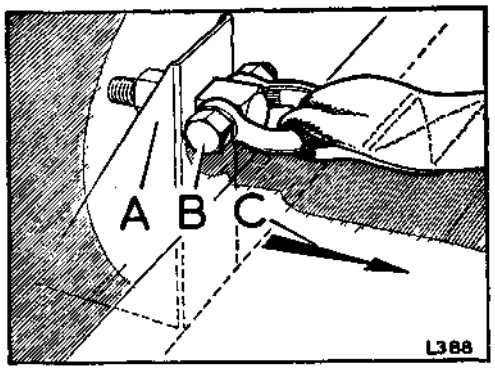


**Fig. Q1-37. Tongue strap fixing, lower bulkhead panel, right-hand side illustrated**

A—Gusset bracket
B—Shackle fixing bolt
C—To front of vehicle

## Operation Q1-16—*continued*

**Early models—Diagonal strap fixing. Except 109 Station Wagon**

6. Screw the shackle bolt into the tapped hole in shoulder bracket, rear of seat panel capping using rubber washer and plain washer. Tighten the shackle bolt so that it is located as illustrated in full line. The rubber washer allows the shackle bolt to be correctly aligned. Do not over-tighten.

**Late models—Diagonal strap fixing. Except 109 Station Wagon**

7. Screw the shackle bolt into the tapped hole in top capping of seat panel, using rubber washer and plain washer. Tighten the shackle bolt, so that it is located as shown in dotted line. The rubber washer allows the shackle bolt to be correctly aligned. Do not over-tighten.

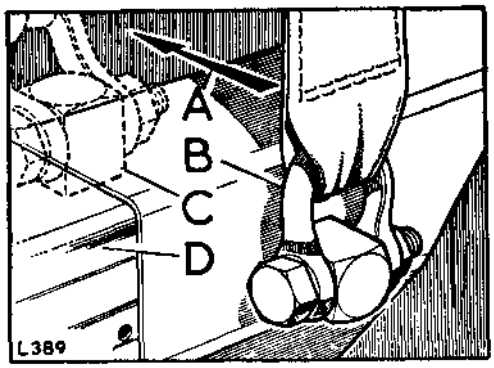


**Fig. Q1-38. Diagonal strap fixing, upper bulkhead panel. Except 109 Station Wagon, right-hand side illustrated**

A—To front of vehicle
B—Shackle position (early models, in full line)
C—Shackle position (late models, in dotted line)
D—Seat panel capping

**109 Station Wagon—Diagonal strap fixing**

8. Screw the shackle bolt into the tapped hole in mounting bracket 'B' top of 'BC' post, using rubber washer and plain washer. Tighten the shackle bolt, so that it is located as illustrated. The rubber washer allows the shackle bolt to be correctly aligned. Do not over-tighten.

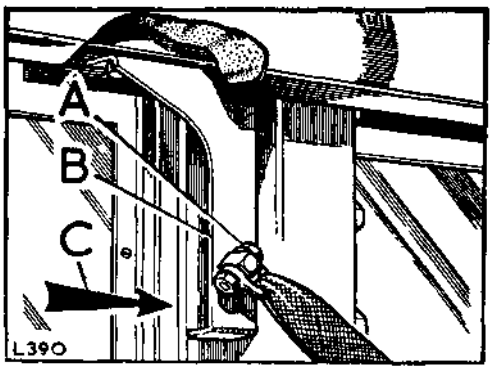


**Fig. Q1-39. Diagonal strap fixing 'BC' post, 109 Station Wagon left-hand side illustrated**

A—Shackle fixing bolt
B—Mounting bracket
C—To front of vehicle

9. With the occupant seated in the front seat, the diagonal shoulder strap should pass over the outboard shoulder, as illustrated.

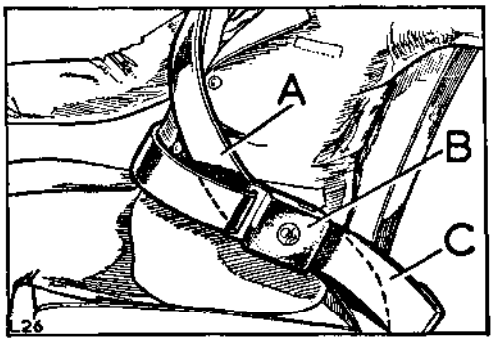


**Fig. Q1-40. Showing safety harness in correct position, right-hand position illustrated**

A—Diagonal shoulder strap
B—Buckle on shoulder strap
C—Short tongue strap

10. Adjust the position of tongue strap buckle to the position shown, that is, with the buckle as far round the body as possible without actually fouling the seat, by pulling strap 'B' to shorten the tongue strap, as shown.

## Operation Q1-16—*continued*

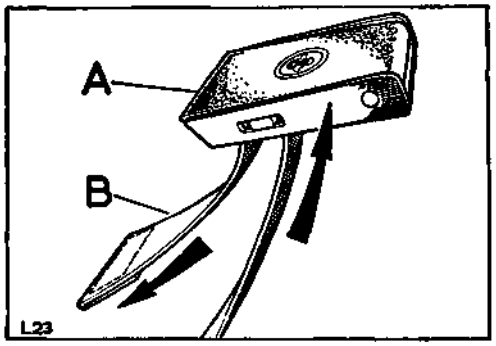


**Fig. Q1-41. Showing adjustment of tongue strap**

A—Quick-release buckle. Hold buckle at right-angles to strap and pull in direction of arrow to lengthen
B—Tongue strap. Pull strap in direction of arrow to tighten

11. Before carrying out the initial adjustment of the diagonal strap at the sill bracket, seat position must be correct for occupant. Try the lap belt round the body for buckle position and make visual assessment of adjustment required, in accordance with instructions as item 10.

12. Then adjust the diagonal strap at the adjustment buckle fitted to sill bracket, by relieving the retaining bar 'A' and pulling strap in the direction of arrow 'B' to lengthen, and in the direction of arrow 'C' to shorten. See Fig. Q1-42.

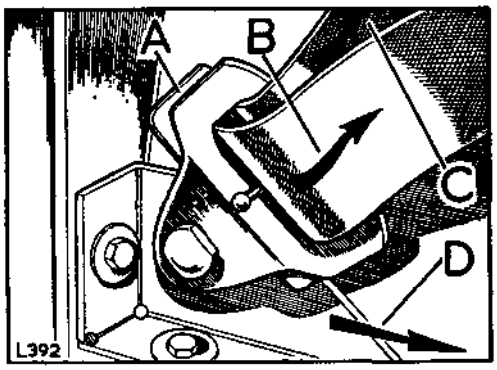


**Fig. Q1-42. Showing adjustment of shoulder strap buckle at sill bracket, right-hand illustrated**

A—Retaining bar
B—Pull to lengthen strap
C—Pull to shorten strap
D—To front of vehicle

# SECTION R—WHEELS AND TYRES

## INDEX—WHEELS AND TYRES


| Description of Contents | Operation Number |
|---|---|
| General information | — |
| Tyres, well base rim wheels, remove and refit | R-1 |
| Tyres, divided wheels, remove and refit | R-2 |
| Tyre data | — |


### General information

1. **Factors affecting tyre life**

   (a) Incorrect tyre pressures.

   (b) High average speeds.

   (c) Harsh acceleration.

   (d) Frequent hard braking.

   (e) Warm, dry climatic conditions.

   (f) Poor road surfaces.

   (g) Impact fractures caused by striking a kerb or loose brick, etc.

   (h) Incorrect front wheel alignment. Alignment should be checked periodically and the procedure is described in Section G.

   **Note:** The condition of tyres in use in the United Kingdom must satisfy legal safety requirements and the information given in this Section must be used subject to those requirements where applicable.

2. **Changing wheel positions**

   The road wheels should be changed round at the mileage intervals specified in the Owner's Maintenance Manual as illustrated to equalise tyre wear. At the same time inspect the tyre tread.

   Check also for cuts, bulges and exposed ply or cord structure.

   When cross-country tyres are used, the 'V' tread should be directed to the front at the top.

   **Warning:** Do not touch the outer ring of nuts on divided type wheels, unless the wheel is removed and the tyre fully deflated, or severe personal injury may result.

   **Important:** As the Land-Rover is fitted with a transmission brake, it is necessary before removing a road wheel to apply the hand brake and engage four-wheel drive.

   This will ensure that the hand brake is operative on all four wheels.

   Remember to engage two-wheel drive when the road wheel has been replaced.

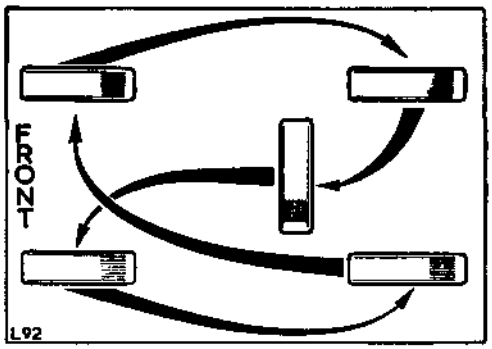


**Fig. R1-1. Changing the wheel positions**

3. **Tyre and inner tube repairs**

   Minor tyre injuries, such as from nails, require no attention other than removal of the object, but more severe tread or wall cuts require vulcanised repairs.

   Avoid the use of gaiters or liners except as a temporary expedient. As 'Butyl' synthetic tubes are used, all repairs must be vulcanised.

## 4. Tyre pressures and types

### Tyre pressures

Maximum tyre life and performance will only be obtained if the tyres are maintained at the correct pressures.

| Model | | Normal | | | | Emergency soft | | | |
|---|---|---|---|---|---|---|---|---|---|
| | | Load under 550 lb (250 kg) | | Load over 550 lb (250 kg) | | Load under 550 lb (250 kg) | | Load over 550 lb (250 kg) | |
| **88 Bonneted Control models** | | Front | Rear | Front | Rear | Front | Rear | Front | Rear |
| 6.00, 6.50 and 7.00 x 16.00 | lb/sq in. | 25 | 25 | 25 | 30 | 15 | 15 | 15 | 20 |
| | kg/cm² | 1,8 | 1,8 | 1,8 | 2,1 | 1,1 | 1,1 | 1,1 | 1,4 |
| 7.50 x 16.00 | lb/sq in. | 25 | 25 | 25 | 30 | 12 | 12 | 12 | 20 |
| | kg/cm² | 1,8 | 1,8 | 1,8 | 2,1 | 0,8 | 0,8 | 0,8 | 1,4 |
| **109 Bonneted Control and 1 Ton models** | | | | | | | | | |
| 7.50 x 16.00 | lb/sq in. | 25 | 25 | 25 | 36 | 15 | 15 | 15 | 26 |
| | kg/cm² | 1,8 | 1,8 | 1,8 | 2,5 | 1,1 | 1,1 | 1,1 | 1,8 |
| 9.00 x 16.00 | lb/sq in. | 20 | 20 | 20 | 30 | 10 | 10 | 10 | 20 |
| | kg/cm² | 1,4 | 1,4 | 1,4 | 2,1 | 0,7 | 0,7 | 0,7 | 1,4 |

### Tyre types

To avoid introducing transmission problems when four-wheel drive is engaged, use the same make and type of tyre on all wheels and change wheel positions as specified to equalise tyre wear.

## Tyres, well base rim wheels, remove and refit—Operation R1-1

Workshop tools:
Wheelbrace, Valve core key, Suitable tyre levers, Tyre pressure gauge

### To remove

**Tyres, well base rims** (Standard on all models)

1. Remove the valve cap and core (extractor provided in tool kit) and deflate the tyre.
2. Press each bead in turn off its seating. Insert a lever at the valve position and, while pulling on this lever, press the bead into the well, diametrically opposite the valve.
3. Insert a second lever close to the first and prise the bead over the wheel rim. Continue round the bead in small steps until it is completely off the rim.
4. Remove the inner tube and pull the second bead over the rim.

### To refit

1. Place the cover over the wheel and press the lower bead over the rim edge into the well.
2. Inflate the inner tube until it is just rounded out, dust with French chalk, and insert it in the cover, with the white spots near the cover bead coinciding with the black spots on the tube.
3. Press the upper bead into the well diametrically opposite the valve and lever the bead over the rim edge.
4. Push the valve inwards to ensure that the tube is not trapped under the bead, pull it back and inflate the tyre.
5. Visually check the concentricity of the fitting lines on the cover and the rim of the wheel flange. Deflate the tube completely and re-inflate to the correct pressure, to relieve any strains in the tube.

## Tyres, divided wheels (early vehicles), remove and refit—Operation R1-2

Workshop tools:
Wheelbrace, Valve core key, Suitable tyre levers, Tyre pressure gauge

### To remove

**Warning:** Do not attempt to remove the outer ring of nuts on divided type wheels unless the wheel is removed and the tyre fully deflated, or severe personal injury may result.

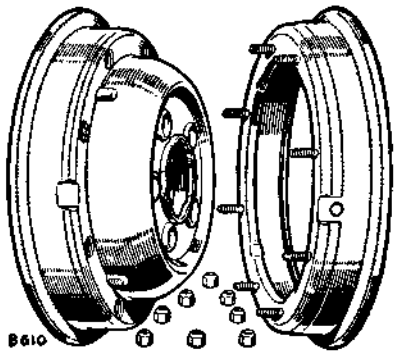


**Fig. R1-2. Divided wheel**

1. Remove the valve cap and core to deflate the tyre.
2. Press each bead in turn away from the flange, using levers and working round the tyre in small steps. Two or three circuits of the tyre may be necessary to free the beads completely.
3. Slacken and remove the clamping nuts. Remove the upper half of the wheel. Push the valve through the lower half of the wheel and remove the cover and tube.

### To refit

1. Thoroughly examine the cover for nails, flints, etc., and ensure that no loose objects have been left inside. Clean the wheel rim flanges and seatings.
2. Inflate the inner tube until it is just rounded out, dust with French chalk and insert it in the cover with the white spots near the cover bead coinciding with the black spots on the tube.
3. Fit the protection flap, starting at the valve position. Make sure that the edges of the flap are not turned over inside the cover and that it lies centrally between the beads. See that the flap fits closely against the tube round the valve.
4. Lay the studded half of the wheel on the floor or bench with the studs pointing upwards. Fit the cover over the wheel and thread the valve through the hole, making sure that it points downwards.
5. Fit the other half of the wheel and tighten the clamping nuts lightly. Finally tighten the nuts using diagonal selection to ensure even tightening. Check that the valve is free and inflate the tyre to the recommended pressure.

## Fault diagnosis—Wheels and tyres

| Symptom | Possible cause | Investigation | Remedy |
|---|---|---|---|
| **Excessive wear on front tyres** | Incorrect tyre pressures | Check tyre pressures | Adjust as necessary |
| | Failure to rotate tyres | | Change position of tyres including spare |
| | Incorrect toe-in of front wheels | Check wheel alignment, Operation G1-2 | Adjust as necessary |
| | Harsh or unequal brakes | Check brake adjustment, Section H | Adjust as necessary |
| | Worn swivel pins | Jack up front of vehicle and check swivel pins | Overhaul swivel pin housings |
| | Incorrectly adjusted brakes | Check brake shoe adjustment, Section H | Adjust as necessary |
| | Eccentric wheels and tyres | Check tyre concentricity line. Check wheel pressings for damage or distortion | Rectify or renew |
| | Distorted brake drum | Remove brake drum and check concentricity | Recondition or fit new replacement |
| | Incorrect camber | Check for settled road springs, damage to front suspension and axle unit | Fit new parts as required |
| | Fast cornering and/or sustained high speed driving | | In the hands of the operator |
| **Excessive wear on rear tyres** | Incorrect tyre pressures | Check tyre pressures | Adjust as necessary |
| | Rear wheel run-out or wobble | Check for loose wheel nuts, damaged wheel or incorrectly fitted tyres | Rectify as necessary |
| | Rear wheels out of alignment | Check that the rear spring centre dowel is not sheared. Check for a broken rear spring main leaf. Check for a damaged chassis | Rectify as necessary, see Sections E and J |
| | Harsh and unnecessary use of the brakes or high speed driving | | In the hands of the operator |
| **Rattle or noise from wheels** | Loose wheel bearings | Check hub bearing adjustment. Sections E and F | Adjust as necessary |
| | Worn or damaged hub bearings | Remove hub and examine bearings | Fit new bearings |
| | Brake shoes or anchor plate loose | Remove brake drum and check shoes and anchor plate for security | Tighten fixings |
| **Squeaks from wheels** | Wheel stud nuts loose | Examine studs for damage | Tighten wheel nuts |
| | Lack of lubrication to wheel bearings | | Lubricate as described in Sections E and F |
| | Wheel bearings adjusted too tightly | Check hub bearing adjustments Sections E and F | Adjust as necessary |
| | Worn or damaged hub bearings | Remove hubs and examine bearings | Fit new bearings |

## Fault diagnosis—Wheels and tyres—*continued*

| Symptom | Possible cause | Investigation | Remedy |
|---|---|---|---|
| **Squeaks from wheels**—cont. | Interference of brake drum with brake shoes | Check the brake drum for distortion and scoring. Check the brake shoes for damage or warping | Rectify or fit new parts as required |
| **Other noises from wheels** | Incorrect tyre pressures | Check tyre pressures | Adjust as necessary |
| | Foreign body embedded in tyre | Examine all tyres | Extract the embedded matter and repair or renew the tyre as necessary |
| | Variation in tread surface due to patch or damage | Examine all tyres | Fit new tyres as necessary |
| | Type or condition of tyre tread giving sound similar to gear noise | Ensure that tyres are of the recommended type and fitted correctly. Check tyre wear condition | Fit new tyres of the recommended type as necessary |
| | Wear in swivel pin housings | | See Section E |
| | Wear in axle half shafts | | See Sections E and F |
| | Wear in differential | | |
| **Overheating of wheel bearings** | Lack of lubrication to wheel bearings | | Lubricate as described in Sections E and F |
| | Use of a poor quality or incorrect grade of lubricant | See Section X for recommended lubricants | Replenish with correct lubricants |
| | Wheel bearings adjusted too tightly | Check hub bearing adjustment, Sections E and F | Adjust as necessary |
| | Worn or damaged wheel bearings | Remove hubs and examine bearings | Fit new bearings as required |
| | Heat transfer from brake drums due to dragging brakes | Check brake shoe adjustment, Section H | Adjust as necessary |
| | Excessive use of brakes | | In the hands of the operator |
| | Foreign matter in bearings | Remove hubs and examine bearings | Fit new parts as required |

# SECTION X—LUBRICANTS AND SERVICING MATERIALS

## Recommended lubricants and fluids

These recommendations apply to temperate climates where operational temperatures are above 14°F (–10°C).

Lubricants marked with an asterisk (*) are multigrade oils suitable for all temperature ranges.

Information on oil recommendations for use under extreme winter or tropical conditions can be obtained from your local Rover Distributor or Dealer or the Rover Co. Ltd. Technical Service Department.

| COMPONENTS | SAE | BP | CASTROL | DUCKHAM'S | ESSO | MOBIL | REGENT TEXACO-CALTEX | SHELL |
|---|---|---|---|---|---|---|---|---|
| **Petrol models**<br>**Engine, air cleaner and governor** .. | 20W | *BP Super Visco-Static 10W-40 | *Castrol GTX | Duckham's Q20-50 Motor Oil | Uniflo or Esso Motor Oil 20W/30 | Mobiloil Super or Mobiloil Arctic | Havoline 20/20W | *Shell Super Oil 100 |
| **Diesel models**<br>**Engine and air cleaner** .. .. | 20W | BP Energol Diesel D20W | Castrol CR1 20 | Fleetol HDX 20 | Essolube HDX 20W/20 | Delvac or Mobiloil Arctic | RPM Delo Special 20-20W | Rotella S or T 20/20W |
| **Gearbox and transfer box**<br>**†Differentials and swivel pin housings**<br>**Steering box** .. .. .. .. ..<br>**Steering relay unit**<br>**Rear power take-off, pulley unit and capstan winch, hydraulic winch gearbox** | 90EP | BP Energol SAE 90EP | Castrol Hypoy | Duckham's Hypoid 90 | Esso Gear Oil GP 90/140 | Mobilube GX 90 | Multigear Lubricant 90 | Spirax 90 EP |
| **Hydraulic winch supply tank** | — | *BP Super Visco-Static 10W-40 | Castrol GTX | Duckham's Q20-50 Motor Oil | Esso Motor Oil 20W/30 | Mobiloil Special or Delvex Special | Havoline 20/20W | *Shell Super Oil or Shell Tellus Oil 27 |
| **††Lubrication nipples** | — | BP Energrease L2 | Castrolease LM | Duckham's LB10 Grease | Esso Multi-purpose Grease H | Mobilgrease MP or Mobil-grease Special | Marfak All purpose | Retinax A or Darina AX |
| **Brake and Clutch fluid** | Castrol Girling Brake and Clutch Fluid 'Crimson' Specification SAE 70 R3 | | | | | | | |
| **Anti-freeze solution** .. .. .. | Any anti-freeze solution conforming to British standard No. BS 3152. | | | | | | | |

†Rear differential, limited-slip type: Castrol 90EP-LS, Fina Pontonic Plus, Shell Limited-Slip Differential Oil S6721A or Mobilube 46—available in the UK market. Pure Oil TS590, Texaco 3450 or Mobil 46—available in the North America Dollar area

††Use any of these greases where instructions in this manual refer to "general purpose grease"

## Recommended jointing compound

'Hylomar' sealing compound SQ 32 M

## Capacities

| Component | Imperial unit | US unit | Litres |
|---|---|---|---|
| Engine sump oil, 4-cylinder .. .. .. .. .. .. | 11 pints | 13 pints | 6,0 |
| Engine sump oil, 6-cylinder .. .. .. .. .. .. | 12 pints | 14 pints | 6,25 |
| Extra when refilling after fitting new filter, 4-cylinder .. .. | 1½ pints | 1.8 pints | 0,85 |
| Extra when refilling after fitting new filter, 6-cylinder .. .. | 1 pint | 1.2 pints | 0,5 |
| Air cleaner oil, 4-cylinder .. .. .. .. .. .. | 1½ pints | 1.8 pints | 0,85 |
| Air cleaner oil, 6-cylinder .. .. .. .. .. .. | 1 pint | 1.2 pints | 0,5 |
| Main gearbox oil .. .. .. .. .. .. .. | 2½ pints | 3 pints | 1,5 |
| Transfer box oil .. .. .. .. .. .. .. | 4½ pints | 5½ pints | 2,5 |
| Rear differential (Standard and limited slip type) | 3 pints | 3½ pints | 1,75 |
| Front differential (Standard and limited slip type) | 3 pints | 3½ pints | 1,75 |
| Rear differential (ENV type) | 2⅝ pints | 3.1 pints | 1,4 |
| Front differential (ENV type) | 2⅛ pints | 2½ pints | 1,2 |
| Swivel pin housing oil (each) .. .. .. .. .. .. | 1 pint | 1,2 pints | 0,5 |
| Fuel tank, except 'Long' Station Wagon .. .. .. .. | 10 gallons | 12 gallons | 45 |
| Fuel tank, 'Long' Station Wagon .. .. .. .. | 16 gallons | 19 gallons | 73 |
| Cooling system, 4-cylinder, Petrol models .. .. .. .. | 18 pints | 21½ pints | 10,25 |
| Cooling system, 4-cylinder, Diesel models .. .. .. .. | 17½ pints | 21 pints | 10,0 |
| Cooling system, 6-cylinder 'Long' models .. .. .. .. | 20 pints | 24 pints | 11,2 |
| Hydraulic front winch, supply tank .. .. .. .. .. | 4½ gallons | 7½ gallons | 20,0 |
| Hydraulic front winch, gearbox .. .. .. .. .. | 2 pints | 2,4 pints | 1,0 |

# SECTION Z — TOOLS

### General

The following standard and special workshop tools cover all requirements for carrying out the servicing and overhaul procedures detailed in this manual. Standard tools are readily available from tool stockists, special tools are available through the normal Rover spares service.

## STANDARD WORKSHOP TOOLS

### Socket sets

0 to 6 BA covering all BA sizes
$\frac{3}{16}$ in. to $\frac{5}{8}$ in. Whit covering all BSF and Whitworth sizes
$\frac{7}{16}$ in. to 2 in. AF covering all UNF and UNC sizes

### Open-ended spanners, chrome vanadium

0 to 6 BA covering all BA sizes
$\frac{1}{8}$ in. to $\frac{5}{8}$ in. Whit covering all BSF and Whitworth sizes
$\frac{7}{16}$ in. to $1\frac{1}{4}$ in. AF covering all UNF and UNC sizes

### Ring spanners, chrome vanadium

$\frac{1}{8}$ in. to $\frac{5}{8}$ in. Whit covering all BSF and Whitworth sizes
$\frac{7}{16}$ in. to $1\frac{1}{4}$ in. AF covering all UNF and UNC sizes

### Miscellaneous tools and equipment

Cylinder bore measuring equipment
1 Pliers, outer circlip
1 Pliers, inner circlip
1 Pliers, pointed nose
1 Pliers, standard
1 Pin punch
1 Screwdriver, large
1 Screwdriver, medium
1 Screwdriver, small
1 Phillips screwdriver, large
1 Phillips screwdriver, medium
1 Phillips screwdriver, small
1 Stud extractor, $\frac{1}{4}$ in.
1 Stud extractor, $\frac{5}{16}$ in.
1 Stud extractor, $\frac{3}{8}$ in.
1 Copper and plastic-faced mallet, large
1 Adjustable spanner, large
1 Adjustable spanner, small
1 Flat chisel
1 Self-grip wrench
1 Bar and horseshoe magnet
1 Torque wrench registering 150 lbs
1 Set feeler gauges, .0015 in. to .025 in.
1 Hammer, 1 lb
1 Hammer, $\frac{1}{2}$ lb
1 Spring balance, 24 lbs
1 Dial test indicator
1 Inspection lamp
1 Brake bleeding kit
1 Oilcan
1 Hand valve grinder, spring-loaded
1 Rule, 12 in.
1 Carbon slip stone, small
1 Hacksaw frame and blades
1 File, 10 in. flat, rough
1 File, 10 in., flat, smooth
1 File, 10 in., round, rough
1 File, 10 in., round, smooth
1 File, 6 in., pillar
1 File, 6 in., round
1 Set Ease-outs, Nos. 1 to 5
1 Roll of insulating tape
1 Hand drill
1 Voltmeter, moving coil type, calibrated 0–25 volts
1 Ammeter, moving coil type, calibrated 0–40 amps
1 Micrometer, 1 in.
1 Micrometer, 1 in. to 2 in.
1 Micrometer, 2 in. to 3 in.
1 Brass drift, $\frac{1}{2}$ in. diameter
1 Girling brake adjustment spanner
3 Girling hose clamps
1 Lucas setting tool No. 54381742 (Lucas number)

## SPECIAL TOOLS

The following list of special tools is arranged in sections conforming to their corresponding sections in the manual. Where a section is not mentioned, no special tools are necessary to carry out the work detailed in that section. The special tool Part numbers are arranged in numerical order within each section.

Symbols used in the text:

*—Essential, must be used when carrying out the particular operation illustrated.

†—Advantageous, these tools will help to give more efficient service when dealing with the operations illustrated.

‡—Required when volume of work justifies use.

## SECTION A—ENGINE

### Part Number 246650
**Press block, cylinder liner ***

Essential for fitting liners to **2.6 litre engines**

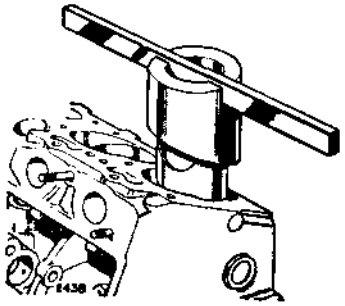

Fig. Z1-1. Cylinder liner press block

### Part Number 261288
**Jig block, cylinder boring ***

Enables the use of standard boring equipment on **2.6 litre engines**

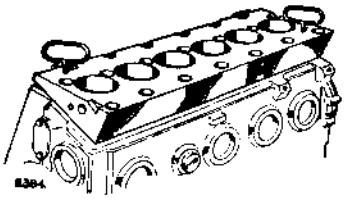

Fig. Z1-2. Reboring jig block

### Part Number 262749
**Extractor, rocker shafts ***

Essential when removing and refitting rockers with engine in position. **2.6 litre engines**

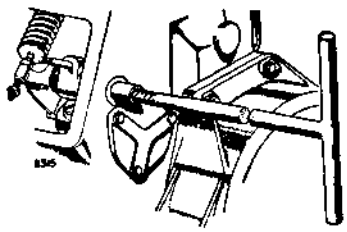

Fig. Z1-3. Extractor, rocker shafts

### Part Number 263050
**Protection plate for exhaust valve seat removal †**

The seat is removed by grinding and breaking, and use of the plate will prevent injury. **2.6 litre engines.**

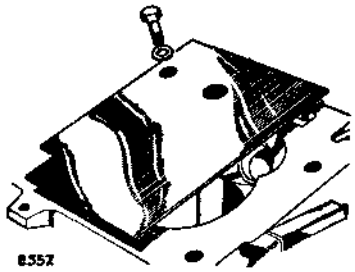

Fig. Z1-4. Protection plate, exhaust valve seat

### Part Number 270304
**Guides for rear main bearing cap seals †**

Provides a leading edge for the rear main seals.

**2¼ litre Petrol engines. 2¼ litre Diesel engines. 2.6 litre engines.**

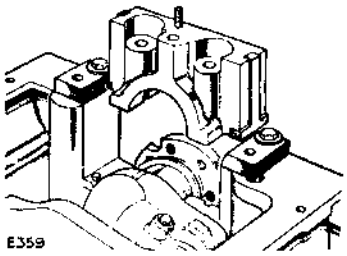

Fig. Z1-5. Guides for rear main bearing cap seals

### Part Number 272103
**Fitting tool, gudgeon pin ‡**

Facilitates refitting of gudgeon pin. **2.6 litre engines.**

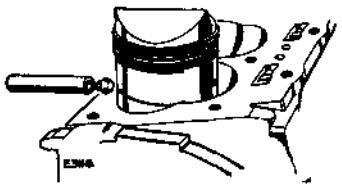

Fig. Z1-6. Gudgeon pin fitting tool

*—Essential †—Advantageous ‡—Required when volume of work justifies use

**Part Number 274381**
**Camshaft bearing fitting tool ***
Essential when refitting camshaft bearings.
**2¼ litre Petrol engines. 2¼ litre Diesel engines.**

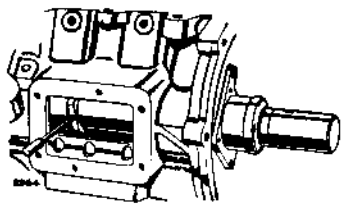

**Fig. Z1-7. Camshaft bearing fitting tool**

**Part Number 274388**
**Camshaft bearing extractor ***
Essential when removing camshaft bearings.
**2¼ litre Petrol engines. 2¼ litre Diesel engines.**

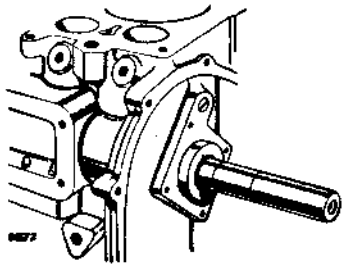

**Fig. Z1-8. Camshaft bearing extractor**

**Part Number 274389**
**Reamer for camshaft bearings ***
Replacement camshaft bearings must be line-bored with this reamer.
**2¼ litre Petrol engines. 2¼ litre Diesel engines.**

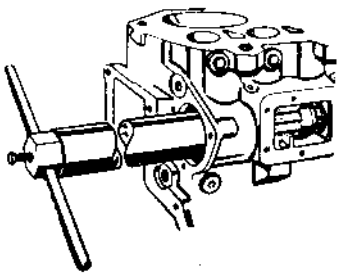

**Fig. Z1-9. Camshaft bearing reamer**

**Part Number 274399**
**Push rod tube extractor and replacer for 'push rod tube' and 'injector shroud' ***
This special drift facilitates push rod tube removal and replacement, and injector shroud fitment.
**2¼ litre Diesel engines.**

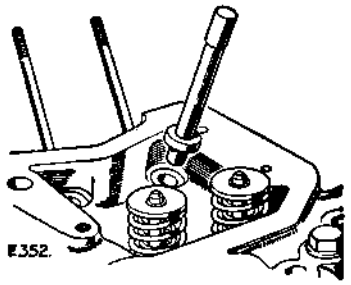


**Fig. Z1-10. Push rod tube extractor and injector shroud fitting tool**

**Part Number 274400**
**Valve guide removal drift ***
Facilitates removal of the valve guide.
**2¼ litre Petrol engines. 2¼ litre Diesel engines. 2.6 litre engines.**

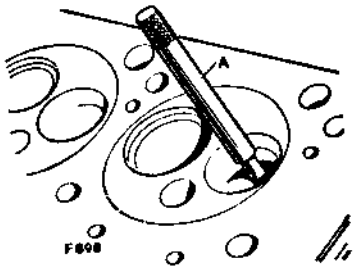


**Fig. Z1-11. Valve guide removal drift**

**Part Number 274401**
**Valve guide removal drift ***
Facilitates removal of the valve guides.
**2¼ litre Petrol engines. 2¼ litre Diesel engines. 2.6 litre engines**

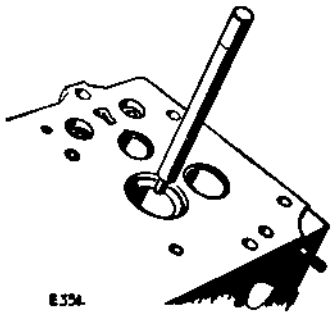


**Fig. Z1-12. Valve guide removal drift**

*—Essential †—Advantageous ‡—Required when volume of work justifies use

**Part Number 276102**
**Valve spring compressor ‡**
Suitable for extracting the cotters on both inlet and exhaust valves.
**2¼ litre Petrol engines. 2¼ litre Diesel engines. 2.6 litre engines.**

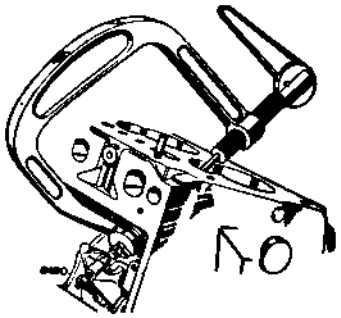

**Fig. Z1-13. Valve spring compressor**

**Part Number 507231**
**Extractor, chain wheel †**
Facilitates chain wheel removal.
**2¼ litre Petrol engines. 2¼ litre Diesel engines. 2.6 litre engines.**

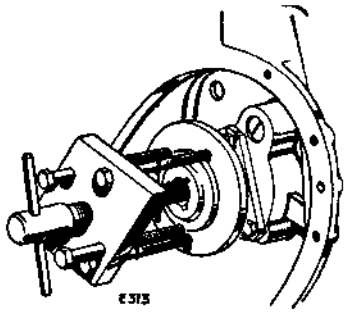

**Fig. Z1-14. Extractor, chain wheel**

**Part Number 530101** (four applications)
**Extractor, camshaft ‡**
Facilitates camshaft removal.
**2¼ litre Petrol engines. 2¼ litre Diesel engines. 2.6 litre engines.**

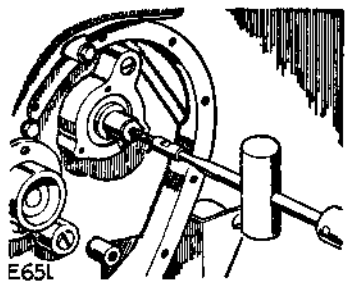

**Fig. Z1-15. Extractor, camshaft**

**Extractor, gudgeon pin ‡**
Facilitates removal of gudgeon pin.

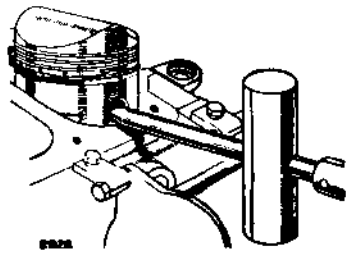

**Fig. Z1-16. Gudgeon pin extractor**

**Tool for pulling in connecting rod bolts ‡**
Facilitates the fitting of connecting rod bolts and is supplied with UNF and BSF thread adaptors.

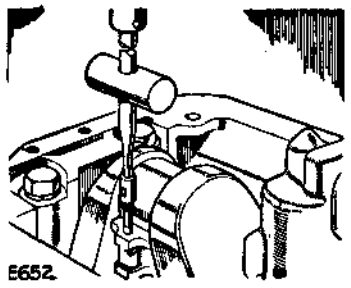

**Fig. Z1-17. Fitting tool, connecting rod bolts**

**Tappet guide extractor and locating tool ***
Essential for easy removal of the tappet guide.

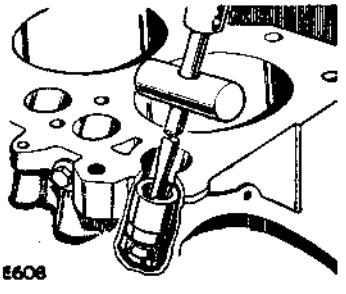

**Fig. Z1-18. Tappet guide extractor and locating tool**

*—Essential †—Advantageous ‡—Required when volume of work justifies use

**Part Number 530102**

**Spanner for starter dog ‡**

**2¼ litre Petrol engines. 2¼ litre Diesel engines. 2.6 litre engines.**

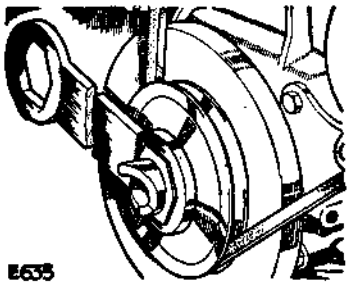


**Fig. Z1-19. Starter dog spanner**

**Part Number 530106**

(Many applications, four of which are illustrated)

**Bracket for indicator, valve timing ‡**

Its use enables the employment of a standard indicator. It has many other applications.

**2¼ litre Petrol engines. 2¼ litre Diesel engines. 2.6 litre engines.**

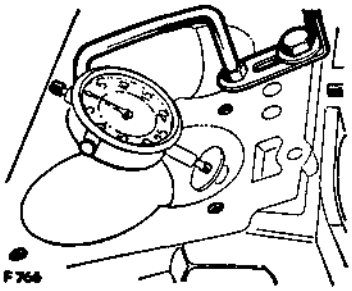


**Fig. Z1-20. Indicator bracket, valve timing**

**Bracket for checking flywheel run-out ‡**

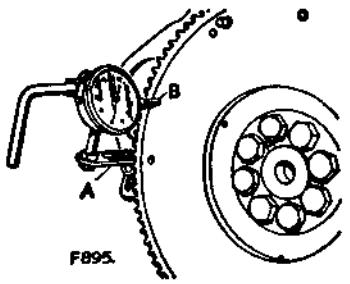


**Fig. Z1-21. Bracket for checking flywheel run-out**

**Bracket for checking crankshaft end-float ‡**

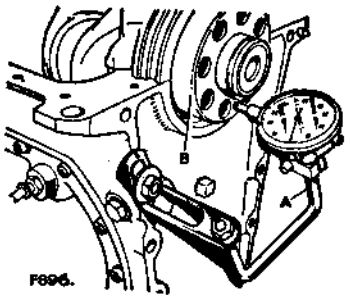


**Fig. Z1-22. Bracket for checking crankshaft end-float**

**Bracket for checking camshaft end-float ‡**

Facilitates checking camshaft end-float

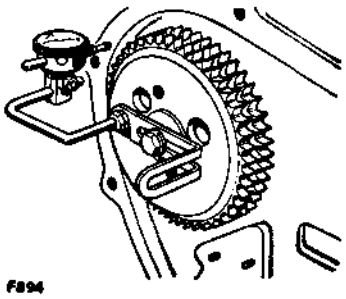


**Fig. Z1-23. Bracket for checking camshaft end-float**

**Part Number 530625**

**Fitting tool, exhaust valve seat ***

The seat insert must be pulled in carefully, to avoid shattering.

**2.6 litre engines.**

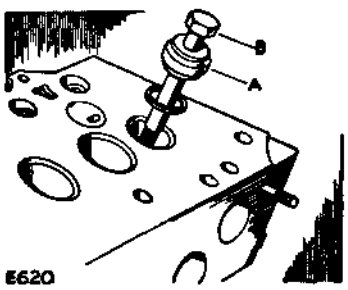


**Fig. Z1-24. Fitting tool, exhaust valve seat**

*—Essential †—Advantageous ‡—Required when volume of work justifies use

**Part Number 600959**
**Fitting tool, exhaust valve guide ***
Prevents damage to guide.
**2¼ litre Petrol engines. 2¼ litre Diesel engines. 2.6 litre engines.**

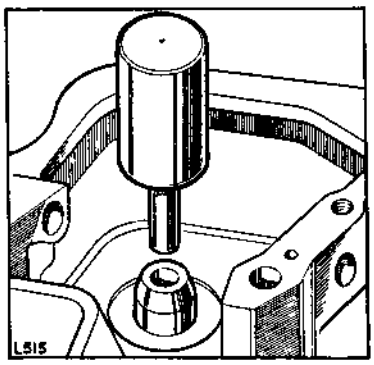


**Fig. Z1-25. Fitting tool for exhaust valve guide**

**Part Number 600963**
**Engine lifting sling ‡**
Facilitates removal and refitting engine.
**2¼ litre Petrol engines. 2¼ litre Diesel engines. 2.6 litre engines.**

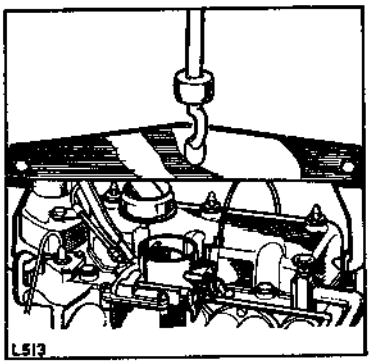


**Fig. Z1-26. Engine lifting sling**

**Part Number 601508**
**Fitting tool, inlet valve guide ***
Prevents damage to guide.
**2¼ litre Petrol engines. 2¼ litre Diesel engines. 2.6 litre engines.**

Similar to Fig. Z1-25, but varying dimensionally

**Part Number 605022**
**Alignment gauge for clutch plate ‡**
Facilitates fitting clutch to engine flywheel.
**2¼ litre Petrol engines. 2¼ litre Diesel engines. 2.6 litre engines.**

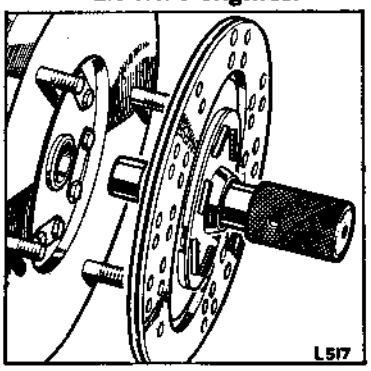


**Fig Z1-27. Alignment gauge for clutch plate**

**Part Number 605238**
**Plastigauge for measuring bearing clearance**
Provides alternative method of checking engine bearings (now in general use).
**2¼ litre Petrol engines. 2¼ litre Diesel engines. 2.6 litre engines.**

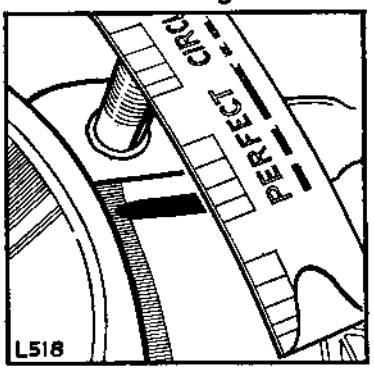


**Fig. Z1-28. Plastigauge for measuring bearing clearance**

**Part Number 605863**
**Timing gauge for distributor pump ***
Essential for timing distributor pump when fitting pump to engine.
**2¼ litre Diesel engines.**

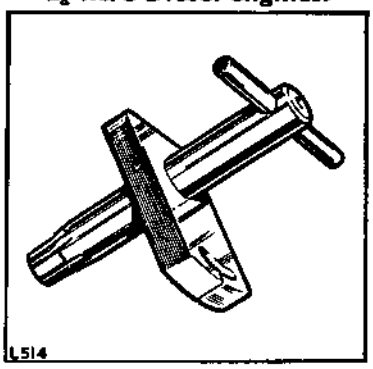


**Fig. Z1-29. Timing gauge for distributor pump**

*—Essential †—Advantageous ‡—Required when volume of work justifies use

## SECTION B—CLUTCH

**Part Number 530103**

**Gauge plate, clutch release levers †**

Clutch lever thrust faces must be set, using these gauges, from the flywheel face.

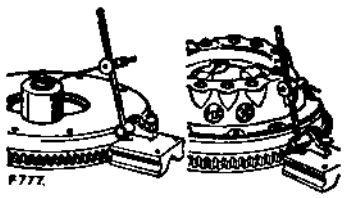

Fig. Z1-30. Gauge plate, clutch release levers

**Part Number 605022**

**Alignment gauge for clutch**

See Fig. Z1-27, Section A—Engine.

## SECTION C—GEARBOX

**Part Number 243241**

**Protection cap, gearbox output shaft ***

Use of this cap will prevent damage to the shaft thread.

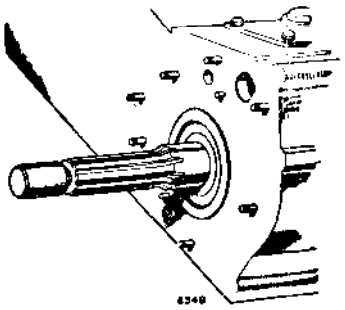

Fig. Z1-31. Protection cap, for gearbox output shaft

**Part Number 600300**

**Spanner for gearbox mainshaft nut ***

Essential when removing and replacing gearbox mainshaft nut.

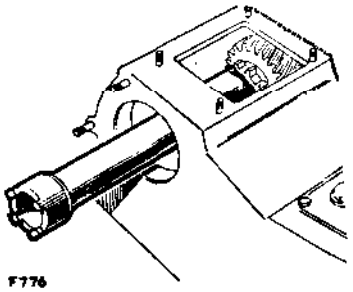

Fig. Z1-32. Spanner for gearbox mainshaft nut

**Part Number 605862**

**Extractor, intermediate shaft, transfer box †**

May be used when withdrawing the shaft.

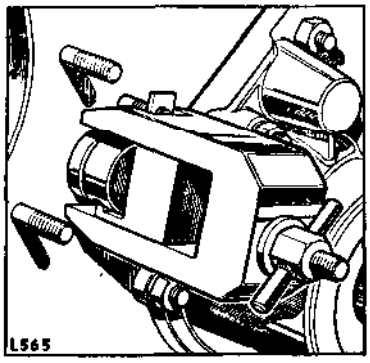

Fig. Z1-33. Extractor for transfer box intermediate shaft

## SECTIONS E and F

**Part Number 262757**

**Extractor, differential pinion rear bearing ***

Required for differentials with taper roller bearings on the pinion shaft.

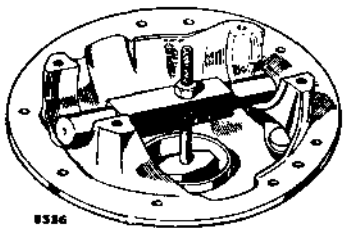

Fig. Z1-34. Pinion bearing extractor

*—Essential †—Advantageous ‡—Required when volume of work justifies use

**Part Number 262761**
**Gauge for differential pinion setting ***
Alternative to Part Number 605004. See Fig. Z1-39.

**Part Number 275870**
**Axle shaft retaining collar removal and replacement tools ***
Essential when removing and replacing axle shaft retaining collar. Supplied with a range of adaptors.

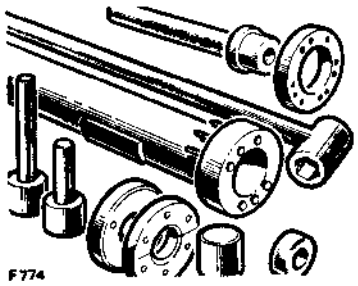


**Fig. Z1-35. Axle shaft retaining collar removal tools**

**Part Number 530105**
**Spanner, crownwheel locking nuts and differential pinion drive flange ‡**
Useful when overhauling the differential.

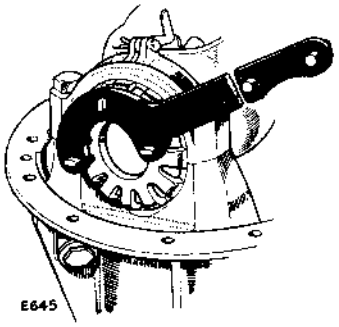


**Fig. Z1-36. Spanner, crownwheel locking nuts ]**

**Part Number 530106**
**Bracket for indicator, differential backlash ‡**
The use of a dial test indicator is the only reliable method of setting backlash.
Also used in Section A—Engine.

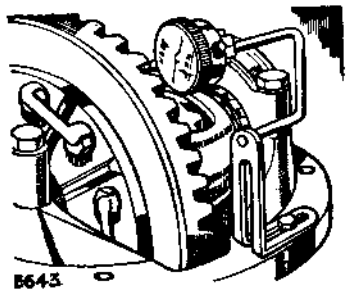


**Fig. Z1-37. Indicator bracket, differential backlash**

**Part Number 600299**
**Gauge for differential pinion setting ***
Alternative to Part Number 605004. See Fig. Z1-39.

**Part Number 600970**
**Tool for bearing adjustment, ENV differential**

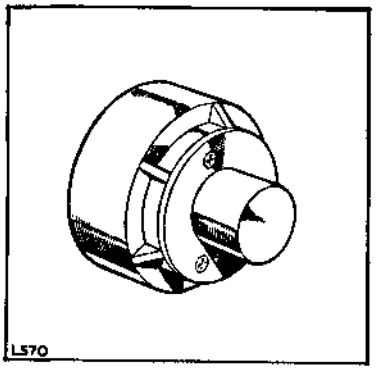


**Fig. Z1-38. Tool for bearing adjustment**

**Part Number 601998**
**Gauge for differential pinion setting ***
Alternative to Part Number 605004. See Fig. Z1-39.

*—Essential †—Advantageous ‡—Required when volume of work justifies use

**Part Number 605004**
**Gauge for differential pinion setting ***
Essential for overhauling differential.
**Note:** Part Number 605004 is the latest gauge, but alternatives mentioned previously may also be used.

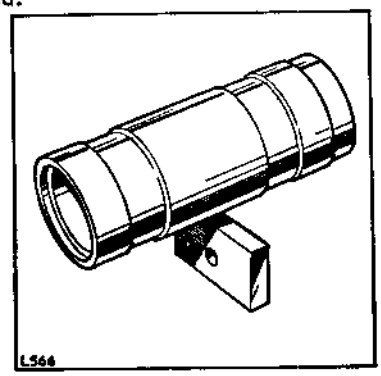


**Fig. Z1-39. Gauge, differential pinion setting**

**Part Number 606012**
**Dummy bearing, differential pinion setting (suffix 'B' axles) ***

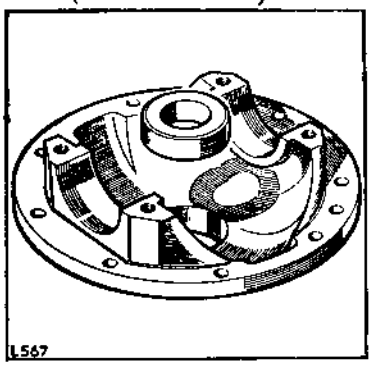


**Fig. Z1-40. Dummy bearing, differential setting**

**Part Number 606019**
**Dummy bearing, differential pinion setting (suffix 'A' axles) ***
Similar to Fig. Z1-40, but varying dimensionally.

**Part Number 606435**
**Spanner for hub bearing nuts ***
Essential for removing, fitting and adjusting hubs

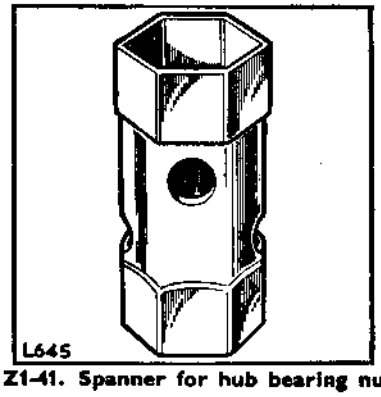


**Fig. Z1-41. Spanner for hub bearing nuts**

## SECTION G—STEERING

**Part Number 600000**
**Extractor for steering drop arm ***
Enables drop arm to be removed with steering box in. situ.

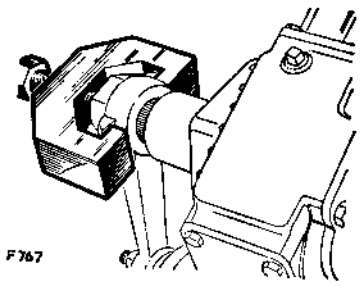


**Fig. Z1-42. Extractor for steering drop arm**

**Part Number 600536**
**Tool for compressing steering relay spring ***
Essential when reassembling the steering relay. Carefully follow the method set out in the Workshop Manual.

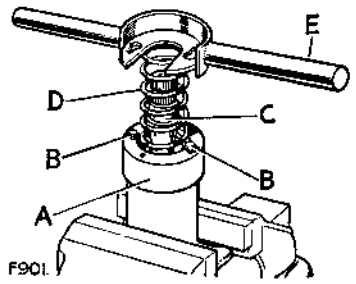


**Fig. Z1-43. Tool for compressing steering relay spring**

**Part Number 600590**
**Extractor, steering ball joints ***
Essential for the easy removal of steering ball joints.

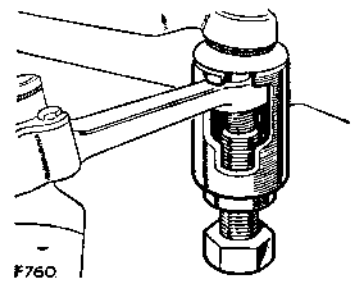


**Fig. Z1-44. Extractor, steering ball joints**

*—Essential †—Advantageous ‡—Required when volume of work justifies use

## SECTION L—FUEL SYSTEM (DIESEL)

### Part Number 271482
### Spanner for nozzle cap †

For easy removal of the injector nozzle cap on early type Injectors.

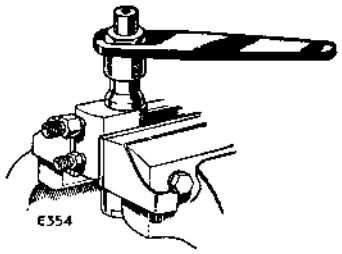


Fig. Z1-45. Nozzle cap spanner

### Part Number 271483
### Injector nozzle testing and setting outfit *

Essential for testing or setting injector nozzles after overhaul.

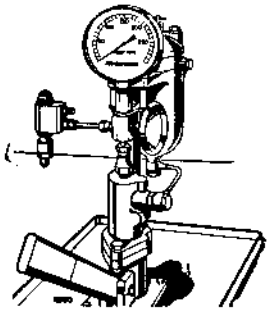

Fig. Z1-46. Injector nozzle testing and setting outfit

### Part Number 271484
### Injector and nozzle cleaning outfit *

A canvas holdall containing all the tools necessary for cleaning injectors and nozzles.

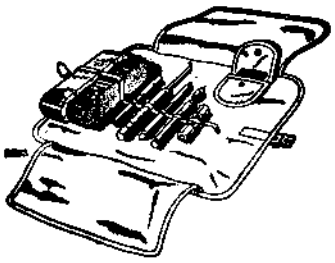

Fig. Z1-47. Injector and nozzle cleaning outfit

### Part Number 276278
### Safety can *

Provides a fluid reservoir for cleaning nozzle components, fitted with automatic closing lid in the event of fire.

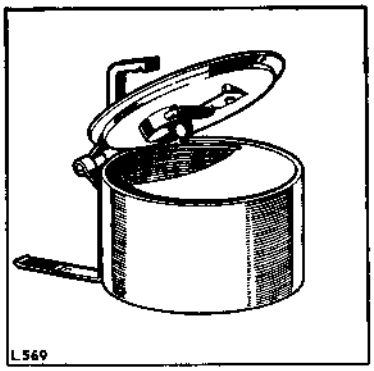


Fig. Z1-48. Safety can

### Part Number 278181
### Flushing tool for injector nozzle *

Essential for flushing the injector nozzle.

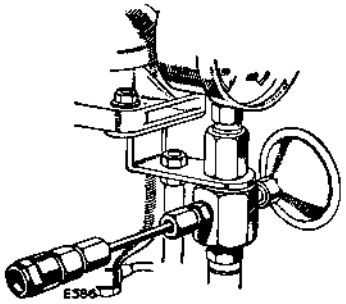


Fig. Z1-49. Injector nozzle flushing tool

### Part Number 278182
### Adaptor for Pintaux injector *

This adaptor is essential for testing the Pintaux injector.

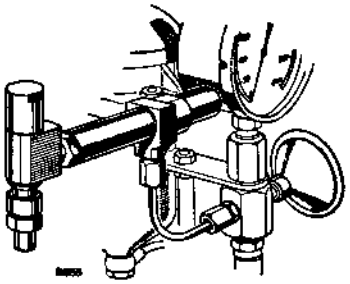

Fig. Z1-50. Injector adaptor

*—Essential †—Advantageous ‡—Required when volume of work justifies use

## SECTION N—ELECTRICAL EQUIPMENT

**Part Number 263058**

**Forked wedge, petrol pump ‡**

The pump body must be assembled with the diaphragm fully stretched, using this tool.

**Note:** This tool is required for the electrically driven fuel pump only, and is refered to in Section L

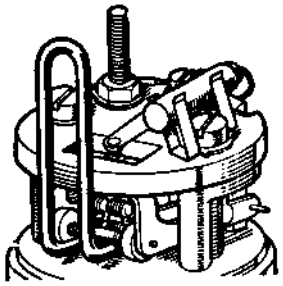

E439.

**Fig. Z1-51. Forked wedge, petrol pump**

## SECTION Q—BODY

**Part Number 248877**

**Spanner for locking door handle ***

This spanner is essential when fitting or removing the private lock on the Land-Rover.

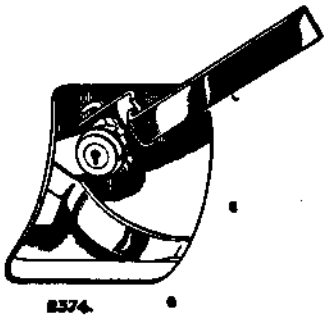

8574.

**Fig. Z1-52. Door handle spanner**

**Part Number 262771**

**Insertion tool, window filler strip ***

Essential for fitting weather filler strip, combines a handle projection for strip removal.

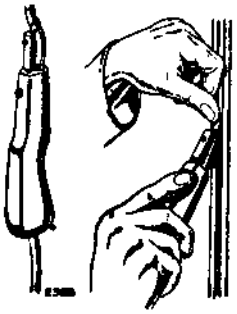

**Fig. Z1-53. Filler strip tool**

# INDEX

TO

# LAND-ROVER WORKSHOP MANUAL

Note: Section letters I, O, S, T, U, V, W, Y are not used

# DETAILED INDEX


| | Description | Operation Number | |
|---|---|---|---|
| | | Remove/Refit | Check/Overhaul |
| **A** | Accelerator hand control | P1-3 | — |
| | Accelerator pedal and linkage | P1-3 | — |
| | Accelerator pump, Solex carburetter | L1-1 | L1-1 |
| | Accelerator pump, Zenith carburetter | L1-2 | L1-2 |
| | Adjustment, hot spot | — | A1-8 |
| | Adjusting tappets, 2¼ litre Petrol | — | A1-19 |
| | Adjusting tappets, 2.6 litre Petrol | — | A3-19 |
| | Adjusting tappets, 2¼ litre Diesel | — | A2-19 |
| | Air cleaner, 2¼ litre Petrol | A1-2 | — |
| | Air cleaner, 2.6 litre Petrol | A3-2 | — |
| | Air cleaner, 2¼ litre Diesel | A2-2 | — |
| | Alternator | A3-10 | N1-27 |
| | Alternator charging system | — | N1-26 |
| | Alternator field isolating relay | — | N1-24 |
| | Alternator output control unit | — | N1-23 |
| | Alternator warning light control | — | N1-25 |
| | Ammeter | P1-1 | — |
| | Anchor plate, 10 in. front and rear | E1-5; F1-4 | H1-10 |
| | Anchor plate, 11 in. front | F1-4 | H1-10A |
| | Anchor plate, 11 in. rear, Series II | E1-5 | H1-10B |
| | Anchor plate, 11 in. rear, Series IIA | E1-5 | H1-10C |
| | Anchor plate, transmission brake | C1-4 | H1-11 |
| | Apron panel, front, 2¼ litre Petrol | A1-3 | — |
| | Apron panel, front, 2.6 litre Petrol | A3-3 | — |
| | Apron panel, front, 2¼ litre Diesel | A2-3 | — |
| | Axle case breather | E1-15, F1-18 | — |
| | Axle case oil seal, front | F1-18 | — |
| | Axle, front | F1-19 | F1-18 |
| | Axle, rear | E1-16 | E1-15 |
| | Axle shaft, front | F1-6 | F1-7 |
| | Axle shaft, rear | E1-2; E1-3A | E1-3; E1-3A |
| | Axle stub, front | F1-4 | F1-5 |
| | Axle stub, rear | E1-5 | E1-6 |
| **B** | Ball joints, steering linkage | — | G1-6 |
| | Battery | N1-1 | N1-1 |
| | Battery charging system with alternator | — | N1-26 |
| | Battery carrier | J1-3 | — |
| | Bearing, camshaft, 2¼ litre Petrol | A1-38 | A1-38 |
| | Bearing, camshaft, 2.6 litre Petrol | A3-36 | A3-36 |
| | Bearing, camshaft, 2¼ litre Diesel | A2-38 | A2-38 |
| | Bearing, clutch withdrawal unit | C1-14 | C1-15 |
| | Bearing, connecting rod, 2¼ litre Petrol | A1-33 | A1-34 |
| | Bearing, connecting rod, 2.6 litre Petrol | A3-32 | A3-33 |
| | Bearing, connecting rod, 2¼ litre Diesel | A2-33 | A2-34 |
| | Bearing, gearbox, layshaft | — | C1-21; C1-25 |

# DETAILED INDEX


| Description | Operation Number | |
|---|---|---|
| | Remove / Refit | Check / Overhaul |
| B Bearing, gearbox, front output shaft | C1-9 | C1-10 |
| Bearing, gearbox, mainshaft | C1-22 | C1-23 |
| Bearing, gearbox, primary pinion | C1-17 | C1-17 |
| Bearing, main, 2¼ litre Petrol | A1-35 | A1-36 |
| Bearing, main, 2.6 litre Petrol | A3-34 | A3-35 |
| Bearing, main, 2¼ litre Diesel | A2-35 | A2-36 |
| Bearing, transfer gearbox, intermediate gear | C1-7 | C1-8; C1-8A |
| Bearing, transfer gearbox, mainshaft | — | C1-8; C1-8A |
| Bearing, transfer gearbox, output shaft | C1-7 | C1-8; C1-8A |
| Belt, fan, 2¼ litre Petrol | A1-10 | — |
| Belt, fan, 2.6 litre Petrol | A3-10 | — |
| Belt, fan, 2¼ litre Diesel | A2-10 | — |
| Bell housing | C1-16 | C1-17 |
| Bleeding brake system | — | H1-1 |
| Board, tail | Q1-12 | — |
| Body panels, Station Wagon | Q1-14 | — |
| Body, rear | Q1-13 | — |
| Body, sides | Q1-12 | — |
| Bonnet | Q1-1 | — |
| Bonnet panel, 2¼ litre Petrol | A1-1 | — |
| Bonnet panel, 2.6 litre Petrol | A3-1 | — |
| Bonnet panel, 2¼ litre Diesel | A2-1 | — |
| Brake and clutch fluid reservoir | H1-3 | — |
| Brake and clutch supply tank | H1-3 | — |
| Brake cylinder, master, 'CV' type | H1-5 | H1-6 |
| Brake cylinder, master, 'CB' type | H1-7 | H1-8 |
| Brake cylinder, master, 'CV' type, with servo | H1-5A | H1-6A |
| Brake cylinder, wheel, 10 in. brakes, front and rear | H1-10 | H1-10 |
| Brake cylinder, wheel, 11 in. brakes, front | H1-10A | H1-10A |
| Brake cylinder, wheel, 11 in. brakes, rear, Series II | H1-10B | H1-10B |
| Brake cylinder, wheel, 11 in. brakes, rear, Series IIA | H1-10C | H1-10C |
| Brake drum, 10 in., front and rear | E1-5; F1-4 | H1-10 |
| Brake drum, 11 in., front | F1-4 | H1-10A |
| Brake drum, 11 in., rear, Series II | E1-5 | H1-10B |
| Brake drum, 11 in., rear Series IIA | E1-5 | H1-10C |
| Brake drum, transmission brake | C1-4 | H1-11 |
| Brake expander, transmission brake | H1-11 | H1-11 |
| Brake drum, hand | C1-4 | H1-11 |
| Brake, hand, LHStg | H1-13 | H1-13 |
| Brake, hand, RHStg | H1-13 | H1-13 |
| Brake pedal | H1-4 | H1-4 |
| Brake pedal used with mechanical servo | H1-4A | H1-4A |
| Brake pipes | H1-9 | — |
| Brake shoe, 10 in. brakes, front and rear | H1-10 | H1-12 |
| Brake shoe, 11 in. brakes, front | H1-10A | H1-12 |
| Brake shoe, 11 in. brakes, rear, Series II | H1-10B | H1-12 |

# DETAILED INDEX


| | Description | Operation Number | |
|---|---|---|---|
| | | Remove/Refit | Check/Overhaul |
| **B** | Brake shoe, 11 in. brakes, rear, Series IIA | H1-10C | H1-12 |
| | Brake shoe, transmission brake | H1-11 | H1-12 |
| | Brake servo unit, hydraulic | H1-14 | H1-15 |
| | Brake servo unit, mechanical | H1-14A | H1-15A |
| | Brake stop lamps | N1-4 | — |
| | Brake stop lamp switch | N1-7 | — |
| | Brake, transmission | C1-4 | H1-11 |
| | Breather box, 2.6 litre Petrol | A3-14 | A3-14 |
| | Breather, gearbox | C1-2 | — |
| | Bumper, front | J1-2 | — |
| **C** | Cable harness, headlamp, 2¼ litre Petrol | A1-5 | — |
| | Cable harness, headlamp, 2.6 litre Petrol | A3-5 | — |
| | Cable harness, headlamp, 2¼ litre Diesel | A2-5 | — |
| | Cable, speedometer | P1-2 | — |
| | Camshaft, 2¼ litre Petrol | A1-37 | A1-37 |
| | Camshaft, 2.6 litre Petrol | A3-36 | A3-36 |
| | Camshaft, 2¼ litre Diesel | A2-37 | A2-37 |
| | Camshaft bearing, 2¼ litre Petrol | A1-38 | A1-38 |
| | Camshaft bearing, 2.6 litre Petrol | A3-36 | A3-36 |
| | Camshaft bearing, 2¼ litre Diesel | A2-38 | A2-38 |
| | Camshaft chain, 2¼ litre Petrol | A1-27 | — |
| | Camshaft chain, 2.6 litre Petrol | A3-25 | — |
| | Camshaft chain, 2¼ litre Diesel | A2-27 | — |
| | Carburetter, 2¼ litre Petrol | A1-6 | L1-1; L1-2 |
| | Carburetter, 2.6 litre Petrol | A3-6 | L1-3; L1-4 |
| | Carburetter, Solex, 2¼ litre Petrol | A1-6 | L1-1 |
| | Carburetter, Zenith, 2¼ litre Petrol | A1-6 | L1-2 |
| | Carburetter, Stromberg, 2.6 litre Petrol | A3-6 | L1-3 |
| | Carburetter, SU, 2.6 litre Petrol | A3-6 | L1-4 |
| | Casing, transfer box | C1-7 | C1-8; C1-8A |
| | Chain, timing, 2¼ litre Petrol | A1-27 | — |
| | Chain, timing, 2.6 litre Petrol | A3-25 | — |
| | Chain, timing, 2¼ litre Diesel | A2-27 | — |
| | Change speed lever, main | C1-11 | C1-12 |
| | Change speed lever, transfer, 2¼ litre Petrol | A1-4 | C1-7 |
| | Change speed lever, transfer, 2.6 litre Petrol | A3-4 | C1-7 |
| | Change speed lever, transfer, 2¼ litre Diesel | A2-4 | C1-7 |
| | Chassis frame | — | J1-1 |
| | Check strap, front door | Q1-5 | — |
| | Check strap, rear axle | E1-8 | — |
| | Clutch cylinder, master | B1-5 | B1-6 |
| | Clutch, 2¼ litre Petrol | A1-31 | B1-1 |
| | Clutch, 2.6 litre Petrol | A3-30 | B1-1 |
| | Clutch, 2¼ litre Diesel | A2-31 | B1-1 |
| | Clutch pedal | B1-7 | — |

# DETAILED INDEX


| | Description | Operation Number | |
|---|---|---|---|
| | | Remove/Refit | Check/Overhaul |
| **C** | Clutch slave cylinder | B1-3 | B1-4 |
| | Clutch withdrawal unit | C1-14 | C1-15 |
| | Coil, ignition, 2¼ litre Petrol | N1-12 | — |
| | Coil, ignition, 2.6 litre Petrol | N1-12 | — |
| | Connecting rod, 2¼ litre Petrol | A1-33 | A1-34 |
| | Connecting rod, 2.6 litre Petrol | A3-32 | A3-33 |
| | Connecting rod, 2¼ litre Diesel | A2-33 | A2-34 |
| | Connecting rod bearing, 2¼ litre Petrol | A1-33 | A1-34 |
| | Connecting rod bearing, 2.6 litre Petrol | A3-32 | A3-33 |
| | Connecting rod bearing, 2¼ litre Diesel | A2-33 | A2-34 |
| | Control box | N1-16 | N1-16 |
| | Cover, front, 2¼ litre Petrol | A1-25 | — |
| | Cover, front, 2.6 litre Petrol | A3-23 | — |
| | Cover, front, 2¼ litre Diesel | A2-25 | — |
| | Cover, gearbox | Q1-6; Q1-7 | — |
| | Cover, side, 2¼ litre Petrol | A1-14 | — |
| | Cover, side, 2.6 litre Petrol | A3-26 | — |
| | Cover, side, 2¼ litre Diesel | A2-14 | — |
| | Crankshaft, 2¼ litre Petrol | A1-35 | A1-36 |
| | Crankshaft, 2.6 litre Petrol | A3-34 | A3-35 |
| | Crankshaft, 2¼ litre Diesel | A2-35 | A2-36 |
| | Crankshaft bearing oil seal, 2¼ litre Petrol | A1-32 | — |
| | Crankshaft bearing oil seal, 2.6 litre Petrol | A3-31 | — |
| | Crankshaft bearing oil seal, 2¼ litre Diesel | A2-35 | — |
| | Cylinder, brake, master, 'CV' type | H1-5 | H1-6 |
| | Cylinder, brake, master, 'CB' type | H1-7 | H1-8 |
| | Cylinder, brake, master, 'CV' type, with servo | H1-5A | H1-6A |
| | Cylinder, brake, wheel, 10 in. brakes, front and rear | H1-10 | H1-10 |
| | Cylinder, brake, wheel, 11 in. brakes, front | H1-10A | H1-10A |
| | Cylinder, brake, wheel, 11 in. brakes, rear, Series II | H1-10B | H1-10B |
| | Cylinder, brake, wheel, 11 in. brakes, rear, Series IIA | H1-10C | H1-10C |
| | Cylinder block, 2¼ litre Petrol | — | A1-38 |
| | Cylinder block, 2.6 litre Petrol | — | A3-37 |
| | Cylinder block, 2¼ litre Diesel | — | A2-38 |
| | Cylinder head, 2¼ litre Petrol | A1-22 | A1-23 |
| | Cylinder head, 2.6 litre Petrol | A3-21 | A3-22 |
| | Cylinder head, 2¼ litre Diesel | A2-22 | A2-23 |
| | Cylinder liner, 2¼ litre Petrol | A1-38 | — |
| | Cylinder liner, 2.6 litre Petrol | A3-37 | — |
| | Cylinder liner, 2¼ litre Diesel | A2-38 | — |
| | Cylinder reboring, 2¼ litre Petrol | — | A1-38 |
| | Cylinder reboring, 2.6 litre Petrol | — | A3-37 |
| | Cylinder reboring, 2¼ litre Diesel | — | A2-38 |
| **D** | Dash | Q1-8 | Q1-9 |
| | Data, technical—refer to end of each Section | — | — |

# DETAILED INDEX


| | Description | Operation Number | |
|---|---|---|---|
| | | Remove/Refit | Check/Overhaul |
| **D** | Decarbonising, 2¼ litre Petrol | — | A1-23 |
| | Decarbonising, 2.6 litre Petrol | — | A3-22 |
| | Decarbonising, 2¼ litre Diesel | — | A2-23 |
| | Diagnosis, fault—refer to end of each Section | — | — |
| | Differential, Rover type | E1-13; F1-16 | E1-14 |
| | Differential, ENV type | E1-13; F1-16 | E1-14A |
| | Dipper switch | N1-9 | — |
| | Dipstick, gearbox | C1-2 | — |
| | Distributor, 2¼ litre Petrol | A1-18 | N1-13 |
| | Distributor, 2.6 litre Petrol | A3-18 | N1-13 |
| | Distributor pump, 2¼ litre Diesel | A2-17 | — |
| | Distributor pump timing, 2¼ litre Diesel | — | A2-17 |
| | Door hinge | Q1-5 | — |
| | Door lock | Q1-5 | — |
| | Doors and fittings | Q1-5 | — |
| | Door, rear, 88 Station Wagon | Q1-15 | — |
| | Door, rear, 109 Station Wagon | Q1-15 | — |
| | Door, rear side, 109 Station Wagon | Q1-5 | — |
| | Drag link | G1-4 | — |
| | Drop arm | G1-7 | — |
| | Drum, foot brake | E1-5; F1-4 | H1-10, A, B & C |
| | Drum, hand brake | C1-4 | H1-11 |
| | Dynamo, 2¼ litre Petrol | A1-10 | N1-22 |
| | Dynamo, 2.6 litre Petrol | A3-10 | N1-22 |
| | Dynamo, 2¼ litre Diesel | A2-10 | N1-22 |
| **E** | Engine hand speed control, Diesel | P1-3 | — |
| | Engine, 2¼ litre Petrol | A1-5 | — |
| | Engine, 2.6 litre Petrol | A3-5 | — |
| | Engine, 2¼ litre Diesel | A2-5 | — |
| | Engine, side cover, 2¼ litre Petrol | A1-14 | — |
| | Engine, side cover, 2¼ litre Diesel | A2-14 | — |
| | Engine stop control, Diesel | P1-5 | — |
| | Engine support, front, 2¼ litre Petrol | A1-5 | — |
| | Engine support, front, 2.6 litre Petrol | A3-5 | — |
| | Engine support, front, 2¼ litre Diesel | A2-5 | — |
| | Engine support, rear | C1-3 | — |
| | Exhaust manifold, 2¼ litre Petrol | A1-7 | A1-8 |
| | Exhaust manifold, 2.6 litre Petrol | A3-8 | — |
| | Exhaust manifold, 2¼ litre Diesel | A2-8 | — |
| | Exhaust pipe and silencer, 2¼ litre | M1-1 | — |
| | Exhaust pipe and silencer, 2.6 litre | M1-2 | — |
| | Exhaust valve, 2¼ litre Petrol | A1-23 | A1-23 |
| | Exhaust valve, 2.6 litre Petrol | A3-22 | A3-22 |
| | Exhaust valve, 2¼ litre Diesel | A2-23 | A2-23 |

# DETAILED INDEX


| | Description | Operation Number | |
|---|---|---|---|
| | | Remove/Refit | Check/Overhaul |
| F | Fan, 2¼ litre Petrol | A1-3 | — |
| | Fan, 2.6 litre Petrol | A3-3 | — |
| | Fan, 2¼ litre Diesel | A2-3 | — |
| | Fan belt tension, 2¼ litre Petrol | A1-10 | — |
| | Fan belt tension, 2.6 litre Petrol | A3-10 | — |
| | Fan belt tension, 2¼ litre Diesel | A2-10 | — |
| | Filler cap, fuel | L1-8; L1-9 | — |
| | Filter, fuel, 2¼ litre Diesel | A2-7 | L1-15 |
| | Filter, oil, external, 2¼ litre Petrol | A1-16 | — |
| | Filter, oil, external, 2.6 litre Petrol | A3-16 | — |
| | Filter, oil, external, 2¼ litre Diesel | A2-16 | — |
| | Flasher lamp | N1-5 | — |
| | Floor, front | Q1-6; Q1-7 | — |
| | Floor, front, 2¼ litre Petrol | A1-4 | — |
| | Floor, front, 2¼ litre Diesel | A2-4 | — |
| | Floor, rear | Q1-13 | — |
| | Flywheel, 2¼ litre Petrol | A1-31 | A1-39 |
| | Flywheel, 2.6 litre Petrol | A3-30 | A3-38 |
| | Flywheel, 2¼ litre Diesel | A2-31 | A2-39 |
| | Flywheel housing, 2¼ litre Petrol | A1-32 | — |
| | Flywheel housing, 2.6 litre Petrol | A3-31 | — |
| | Flywheel housing, 2¼ litre Diesel | A2-32 | — |
| | Flywheel reclamation, 2¼ litre Petrol | — | A1-39 |
| | Flywheel reclamation, 2.6 litre Petrol | — | A3-38 |
| | Flywheel reclamation, 2¼ litre Diesel | — | A2-39 |
| | Four wheel drive selector, 2¼ litre Petrol | A1-4 | C1-10 |
| | Four wheel drive selector, 2.6 litre Petrol | A3-4 | C1-10 |
| | Four wheel drive selector, 2¼ litre Diesel | A2-4 | C1-10 |
| | Frame, chassis | — | J1-1 |
| | Front apron panel, 2¼ litre Petrol | A1-3 | — |
| | Front apron panel, 2.6 litre Petrol | A3-3 | — |
| | Front apron panel, 2¼ litre Diesel | A2-3 | — |
| | Front bumper | J1-2 | — |
| | Front cover, 2¼ litre Petrol | A1-25 | — |
| | Front cover, 2.6 litre Petrol | A3-23 | — |
| | Front cover, 2¼ litre Diesel | A2-25 | — |
| | Front exhaust pipe, 2¼ litre | M1-1 | — |
| | Front exhaust pipe, 2.6 litre | M1-2 | — |
| | Front shock absorber | F1-11 | F1-11 |
| | Front wheel alignment | — | G1-2 |
| | Front wing | Q1-3 | — |
| | Fuel filter, 2¼ litre Diesel | A2-7 | L1-15 |
| | Fuel filter, Petrol | L1-12 | — |
| | Fuel filter, 2¼ litre Diesel | L1-15 | — |
| | Fuel injector, 2¼ litre Diesel | A2-6 | L1-16 |
| | Fuel pump, 2¼ litre Petrol | A1-13 | L1-5 |

# DETAILED INDEX


| | Description | Operation Number | |
|---|---|---|---|
| | | Remove/Refit | Check/Overhaul |
| **F** | Fuel pump, electric, 2.6 litre Petrol | L1-6 | L1-7 |
| | Fuel pump, 2¼ litre Diesel | A2-13 | L1-5 |
| | Fuel pump, mechanical | A1-13; A2-13 | L1-5 |
| | Fuel pump, electric | L1-6 | L1-7 |
| | Fuel sedimenter, 2¼ litre Diesel | L1-15 | — |
| | Fuel warning light, Diesel | P1-1; P1-1A | — |
| | Fuse box | N1-15 | — |
| **G** | Gearbox breather | C1-2 | — |
| | Gears, main gearbox, layshaft | C1-20 | C1-21 |
| | Gears, main gearbox, mainshaft | C1-22 | C1-23 |
| | Gears, transfer box | C1-7 | C1-8; C1-8A |
| | Glass, cab | Q1-11 | — |
| | Glass, rear door | Q1-15 | Q1-11 |
| | Glass, side door | Q1-5 | Q1-11 |
| | Glass, side, hard top | Q1-12 | Q1-11 |
| | Glass, side, Station Wagon | Q1-14 | Q1-11 |
| | Glass, windscreen | Q1-4 | — |
| | Grille panel, radiator, 2¼ litre Petrol | A1-3 | — |
| | Grille panel, radiator, 2.6 litre Petrol | A3-3 | — |
| | Grille panel, radiator, 2¼ litre Diesel | A2-3 | — |
| | Grille, radiator | Q1-2 | — |
| | Gudgeon pin, 2¼ litre Petrol | A1-34 | A1-34 |
| | Gudgeon pin, 2.6 litre Petrol | A3-33 | A3-33 |
| | Gudgeon pin, 2¼ litre Diesel | A2-34 | A2-34 |
| | Guide tappet, 2¼ litre Petrol | A1-24 | — |
| | Guide tappet, 2¼ litre Diesel | A2-24 | — |
| **H** | Hand brake lever | H1-13 | H1-13 |
| | Hand brake, transmission | C1-4 | H1-11 |
| | Hand control, engine speed, Diesel | P1-3 | — |
| | Headlamps | N1-2 | N1-2 |
| | Heater plugs, Diesel | N1-14 | N1-14 |
| | Heater plug and starter switch, Diesel | N1-8 | — |
| | Heater plug, 2¼ litre Diesel | A2-23 | N1-14 |
| | Horn | N1-18 | N1-18 |
| | Horn button | N1-17; G1-3 | — |
| | Hot plug, 2¼ litre Diesel | A2-23 | — |
| | Hot spot adjustment, 2¼ litre Petrol | — | A1-8 |
| | Housing, clutch withdrawal | C1-14 | C1-15 |
| | Housing, front output | C1-9 | C1-10 |
| | Housing, rear mainshaft bearing | C1-7 | C1-8; C1-8A |
| | Housing, swivel pin | F1-9 | F1-10 |
| | Housing, thermostat, 2¼ litre Petrol | A1-12 | — |
| | Housing, thermostat, 2.6 litre Petrol | A3-12 | — |

# DETAILED INDEX


| | Description | Operation Number | |
|---|---|---|---|
| | | Remove/Refit | Check/Overhaul |
| **H** | Housing, thermostat, 2¼ litre Diesel | A2-12 | — |
| | Hub, front | F1-4 | F1-5 |
| | Hub, rear | E1-5 | E1-6 |
| **I** | Ignition timing, 2¼ litre Petrol | — | A1-17 |
| | Ignition timing, 2.6 litre Petrol | — | A3-17 |
| | Injector, fuel, 2¼ litre Diesel | A2-6 | L1-16 |
| | Inlet manifold, 2¼ litre Petrol | A1-7 | A1-8 |
| | Inlet manifold, 2¼ litre Diesel | A2-8 | — |
| | Inlet valve, 2¼ litre Petrol | A1-23 | A1-23 |
| | Inlet valve, 2.6 litre Petrol | A3-22 | A3-22 |
| | Inlet valve, 2¼ litre Diesel | A2-23 | A2-23 |
| | Inner tube | R1-1 | — |
| | Instruments | P1-1; P1-1A | — |
| **L** | Lamp, head | N1-2 | — |
| | Lamp, number plate | N1-6 | — |
| | Lamp, rear | N1-4 | — |
| | Lamp, side | N1-3 | — |
| | Lamp, stop | N1-4 | — |
| | Layshaft | C1-20 | C1-21 |
| | Level unit, fuel tank, side mounted | L1-10 | — |
| | Level unit, fuel tank, rear mounted | L1-11 | — |
| | Lever, change speed, main | C1-11 | C1-12 |
| | Lever, change speed, transfer | C1-7 | — |
| | Lever, clutch | B1-9 | — |
| | Lever, hand brake | H1-13 | H1-13 |
| | Lever, hand speed control, Diesel | P1-3 | — |
| | Lever, steering | F1-10 | — |
| | Lever, steering relay | G1-9 | — |
| | Light, warning, instrument panel | P1-1; P1-1A | — |
| | Liner, cylinder, 2¼ litre Petrol | A1-38 | — |
| | Liner, cylinder, 2.6 litre Petrol | A3-37 | — |
| | Liner, cylinder, 2¼ litre Diesel | A2-38 | — |
| | Link, drag | G1-4 | — |
| | Lock, door | Q1-5 | — |
| | Longitudinal tube, steering | G1-5 | — |
| | Lubrication | Section X | — |
| **M** | Main bearing, crankshaft, 2¼ litre Petrol | A1-35 | A1-36 |
| | Main bearing, crankshaft, 2.6 litre Petrol | A3-34 | A3-35 |
| | Main bearing, crankshaft, 2¼ litre Diesel | A2-35 | A2-36 |
| | Mainshaft, bearing housing, rear | C1-7 | C1-8; C1-8A |
| | Mainshaft, gearbox | C1-22 | C1-23 |
| | Manifold, exhaust, 2¼ litre Petrol | A1-7 | — |

# DETAILED INDEX


| | Description | Operation Number | |
|---|---|---|---|
| | | Remove/Refit | Check/Overhaul |
| **M** | Manifold, exhaust, 2.6 litre Petrol | A3-8 | — |
| | Manifold, exhaust, 2¼ litre Diesel | A2-8 | — |
| | Manifold, inlet, 2¼ litre Petrol | A1-7 | A1-8 |
| | Manifold, inlet, 2¼ litre Diesel | A2-8 | — |
| | Master cylinder, clutch | B1-5 | B1-6 |
| | Master cylinder, 'CV' type | H1-5 | H1-6 |
| | Master cylinder, 'CB' type | H1-7 | H1-8 |
| | Master cylinder, 'CV' type, with servo | H1-5A | H1-6A |
| | Mixture control, Petrol | P1-4 | — |
| | Mounting, engine, 2¼ litre Petrol | A1-5 | — |
| | Mounting, engine, 2.6 litre Petrol | A3-5 | — |
| | Mounting, engine, 2¼ litre Diesel | A2-5 | — |
| **N** | Nozzle, fuel injector, Diesel | A2-6 | L1-16 |
| | Number plate lamp | N1-6 | — |
| **O** | Oil filter, external, 2¼ litre Petrol | A1-16 | — |
| | Oil filter, external, 2.6 litre Petrol | A3-16 | — |
| | Oil filter, external, 2¼ litre Diesel | A2-16 | — |
| | Oil gallery pipe, 2.6 litre Petrol | A3-21 | — |
| | Oil strainer, 2¼ litre Petrol | A1-30 | — |
| | Oil strainer, 2.6 litre Petrol | A3-29 | — |
| | Oil strainer, 2¼ litre Diesel | A2-30 | — |
| | Oil presure switch | A3-7 | — |
| | Oil pressure warning light | P1-1; P1-1A | — |
| | Oil pump, 2¼ litre Petrol | A1-29 | A1-30 |
| | Oil pump, 2.6 litre Petrol | A3-28 | A3-29 |
| | Oil pump, 2¼ litre Diesel | A2-29 | A2-30 |
| | Oil seal, crankshaft bearing, 2¼ litre Petrol | A1-32 | — |
| | Oil seal, crankshaft bearing, 2.6 litre Petrol | A3-31 | — |
| | Oil seal, crankshaft bearing, 2¼ litre Diesel | A2-32 | — |
| | Output shaft, four wheel drive | C1-9 | C1-10 |
| **P** | Pedal, accelerator | P1-3 | — |
| | Pedal, brake | H1-4 | H1-4 |
| | Pedal, brake, with mechanical servo | H1-4A | H1-4A |
| | Pedal, clutch | B1-7 | — |
| | Petrol pump, mechanical, 2¼ litre | A1-13 | L1-5 |
| | Petrol pump, electric, 2.6 litre | L1-6 | L1-7 |
| | Petrol sediment bowl | L1-12 | — |
| | Petrol tank, side mounted | L1-8 | — |
| | Petrol tank, rear mounted | L1-9 | — |
| | Petrol tank level unit, side tank | L1-10 | — |
| | Petrol tank level unit, rear tank | L1-11 | — |
| | Pipe, brake | H1-9 | — |

# DETAILED INDEX


| | Description | Operation Number | |
|---|---|---|---|
| | | Remove/Refit | Check/Overhaul |
| **P** | Piston, 2¼ litre Petrol | A1-33 | A1-34 |
| | Piston, 2.6 litre Petrol | A3-32 | A3-33 |
| | Piston, 2¼ litre Diesel | A2-33 | A2-34 |
| | Piston ring, 2¼ litre Petrol | A1-34 | A1-34 |
| | Piston ring, 2.6 litre Petrol | A3-33 | A3-33 |
| | Piston ring, 2¼ litre Diesel | A2-34 | A2-34 |
| | Plug, heater, 2¼ litre Diesel | N1-14 | N1-14 |
| | Priming fuel system, Diesel | — | L1-14 |
| | Propeller shaft, front | D1-2 | D1-3 |
| | Propeller shaft, rear | D1-2 | D1-3 |
| | Pump, distributor, 2¼ litre Diesel | A2-17 | — |
| | Pump, distributor, timing, 2¼ litre Diesel | — | A2-17 |
| | Pump, water, 2¼ litre Petrol | A1-11 | K1-2 |
| | Pump, water, 2.6 litre Petrol | A3-11 | K1-2 |
| | Pump, water, 2¼ litre Diesel | A2-11 | K1-2 |
| | Push rod, tappet, 2¼ litre Petrol | A1-22 | — |
| | Push rod, tappet, 2.6 litre Petrol | A3-21 | — |
| | Push rod, tappet, 2¼ litre Diesel | A2-22 | — |
| **R** | Radiator grille panel, 2¼ litre Petrol | A1-3 | — |
| | Radiator grille panel, 2.6 litre Petrol | A3-3 | — |
| | Radiator grille panel, 2¼ litre Diesel | A2-3 | — |
| | Rear axle | E1-16 | — |
| | Rear axle casing | E1-15 | — |
| | Rear axle shaft | E1-2; E1-3A | E1-3; E1-3A |
| | Rear body | Q1-13 | — |
| | Rear door | Q1-15 | — |
| | Rear side doors | Q1-5 | — |
| | Reboring, cylinders, 2¼ litre Petrol | — | A1-38 |
| | Reboring, cylinders, 2.6 litre Petrol | — | A3-37 |
| | Reboring, cylinders, 2¼ litre Diesel | — | A2-38 |
| | Relay unit, steering | G1-9 | G1-10 |
| | Relief valve, oil, 2¼ litre Petrol | A1-30 | — |
| | Relief valve, oil, 2.6 litre Petrol | A3-29 | — |
| | Relief valve, oil, 2¼ litre Diesel | A2-30 | — |
| | Reverse gear | C1-25 | C1-25 |
| | Reverse selector shaft, stop | — | C1-13; C1-18 |
| | Rings, piston, 2¼ litre Petrol | A1-34 | A1-34 |
| | Rings, piston, 2.6 litre Petrol | A3-33 | A3-33 |
| | Rings piston, 2¼ litre Diesel | A2-34 | A2-34 |
| | Road spring, front | F1-12 | F1-13 |
| | Road spring, rear | E1-9 | E1-10 |
| | Road wheel | R1-1; R1-2 | — |
| | Rocker shaft, 2¼ litre Petrol | A1-20 | — |
| | Rocker shaft, side, 2.6 litre Petrol | A3-26 | — |

# DETAILED INDEX


| | Description | Operation Number | |
|---|---|---|---|
| | | Remove / Refit | Check / Overhaul |
| **R** | Rocker shaft, top, 2.6 litre Petrol | A3-20 | — |
| | Rocker shaft, 2¼ litre Diesel | A2-20 | — |
| | Rod, track | G1-4 | — |
| | Roof, cab | Q1-11 | — |
| | Roof, hard top | Q1-12 | — |
| | Roof, Station Wagon | Q1-14 | — |
| **S** | Seat base | Q1-10 | — |
| | Sediment bowl, Petrol | L1-12 | — |
| | Sedimenter, Diesel | L1-15 | — |
| | Selector, four wheel drive, 2¼ litre Petrol | A1-4 | C1-10 |
| | Selector, four wheel drive, 2.6 litre Petrol | A3-4 | C1-10 |
| | Selector, four wheel drive, 2¼ litre Diesel | A2-4 | C1-10 |
| | Selector shaft adjustment | — | C1-18 |
| | Servo unit, hydraulic, brakes | H1-14 | H1-15 |
| | Servo unit, machanical, brakes | H1-14A | H1-15A |
| | Shackle pin | E1-9; F1-12 | E1-10; F1-13 |
| | Shaft, front axle | F1-6 | F1-7 |
| | Shaft, rear axle | E1-2; E1-3A | E1-3; E1-3A |
| | Shaft, gearbox selector | C1-18 | C1-19 |
| | Shaft, output, four wheel drive | C1-9 | C1-10 |
| | Shaft, propeller, front | D1-2 | D1-3 |
| | Shaft, propeller, rear | D1-2 | D1-3 |
| | Shock absorber | E1-7 | E1-7 |
| | Shoe, 10 in. brakes, front and rear | H1-10 | H1-12 |
| | Shoe, 11 in. brakes, front | H1-10A | H1-12 |
| | Shoe, 11 in. brakes, rear, Series II | H1-10B | H1-12 |
| | Shoe, 11 in. brakes, rear, Series IIA | H1-10C | H1-12 |
| | Shoe, transmission brake | H1-11 | H1-12 |
| | Side lamp | N1-3 | — |
| | Side screen | Q1-5 | — |
| | Silencer, exhaust, 2¼ litre | M1-1 | — |
| | Silencer, exhaust, 2.6 litre | M1-2 | — |
| | Slave cylinder, clutch | B1-3 | B1-4 |
| | Solenoid, starter, 2¼ litre Diesel | N1-21 | N1-21 |
| | Speedometer | P1-1; P1-1A | — |
| | Speedometer cable | P1-2 | — |
| | Spring, road, front | F1-12 | F1-13 |
| | Spring, road, rear | E1-9 | E1-10 |
| | Starter motor, 2¼ litre Petrol | A1-9 | N1-20 |
| | Starter motor, 2.6 litre Petrol | A3-9 | N1-20 |
| | Starter motor, 2¼ litre Diesel | A2-9 | N1-21 |
| | Steering ball joints | — | G1-6 |
| | Steering box | G1-7 | G1-8 |
| | Steering box adjustment | — | G1-8 |

# DETAILED INDEX


| | Description | Operation Number | |
|---|---|---|---|
| | | Remove/Refit | Check/Overhaul |
| **S** | Steering column | G1-7 | G1-8 |
| | Steering drag link | G1-4 | — |
| | Steering longitudinal arm | G1-5 | — |
| | Steering relay | G1-9 | G1-10 |
| | Steering track rod | G1-4 | — |
| | Steering wheel | G1-3 | — |
| | Stop lamp | N1-4 | — |
| | Stop lever, Diesel | P1-5 | — |
| | Strainer, oil, 2¼ litre Petrol | A1-30 | — |
| | Strainer, oil, 2.6 litre Petrol | A3-29 | — |
| | Strainer, oil, 2¼ litre Diesel | A2-30 | — |
| | Stub axle, front | F1-4 | F1-5 |
| | Stub axle, rear | E1-5 | E1-6 |
| | Sump, crankcase, 2¼ litre Petrol | A1-28 | — |
| | Sump, crankcase, 2.6 litre Petrol | A3-27 | — |
| | Sump, crankcase, 2¼ litre Diesel | A2-28 | — |
| | Supply tank, brake and clutch | H1-3 | — |
| | Switch, lamps | P1-1; P1-1A | — |
| | Switch, panel lights | P1-1; P1-1A | — |
| | Switch, starter, Petrol | N1-8 | — |
| | Switch, starter and heater plug, Diesel | N1-8 | — |
| | Switch, stop lamp | N1-7 | — |
| | Swivel pins | F1-9 | F1-10 |
| **T** | Tailboard | Q1-12 | — |
| | Tail lamp | N1-4 | — |
| | Tank, brake and clutch supply | H1-3 | — |
| | Tank, fuel, side mounted | L1-8 | — |
| | Tank, fuel, rear mounted | L1-9 | — |
| | Tappet adjustment, 2¼ litre Petrol | — | A1-19 |
| | Tappet adjustment, 2.6 litre Petrol | — | A3-19 |
| | Tappet adjustment, 2¼ litre Diesel | — | A2-19 |
| | Tappet guide, 2¼ litre Petrol | A1-24 | — |
| | Tappet guide, 2¼ litre Diesel | A2-24 | — |
| | Technical data—refer to end of each Section | — | — |
| | Thermostat, 2¼ litre Petrol | A1-12 | K1-1 |
| | Thermostat, 2.6 litre Petrol | A3-12 | K1-1 |
| | Thermostat, 2¼ litre Diesel | A2-12 | K1-1 |
| | Timing chain, 2¼ litre Petrol | A1-27 | — |
| | Timing chain, 2.6 litre Petrol | A3-25 | — |
| | Timing chain, 2¼ litre Diesel | A2-27 | — |
| | Timing chain tensioner, 2¼ litre Petrol | A1-26 | — |
| | Timing chain tensioner, 2.6 litre Petrol | A3-24 | — |
| | Timing chain tensioner, 2¼ litre Diesel | A2-26 | — |
| | Timing, distributor pump, 2¼ litre Diesel | — | A2-17 |

# DETAILED INDEX


| | Description | Operation Number | |
|---|---|---|---|
| | | Remove/Refit | Check/Overhaul |
| **T** | Timing, ignition, 2¼ litre Petrol | — | A1-17 |
| | Timing, ignition, 2.6 litre Petrol | — | A3-17 |
| | Timing, valve, 2¼ litre Petrol | — | A1-27 |
| | Timing, valve, 2.6 litre Petrol | — | A3-25 |
| | Timing, valve, 2¼ litre Diesel | — | A2-27 |
| | Toe-in, front wheels | — | G1-2 |
| | Tools | Section Z | — |
| | Track rod | G1-4 | — |
| | Transmission brake | C1-4 | H1-11 |
| | Tyre, road wheel | R1-1; R1-2 | — |
| **U** | Universal joints, front axle | F1-6 | F1-7 |
| | Universal joint, propeller shafts | D1-2 | D1-3 |
| **V** | Valve guide, exhaust, 2¼ litre Petrol | A1-23 | A1-23 |
| | Valve guide, exhaust, 2.6 litre Petrol | A3-22 | A3-22 |
| | Valve guide, exhaust, 2¼ litre Diesel | A2-23 | A2-23 |
| | Valve guide, inlet, 2¼ litre Petrol | A1-23 | A1-23 |
| | Valve guide, inlet, 2.6 litre Petrol | A3-22 | A3-22 |
| | Valve guide, inlet, 2¼ litre Diesel | A2-23 | A2-23 |
| | Valve seats, 2¼ litre Petrol | A1-23 | A1-23 |
| | Valve seats, 2.6 litre Petrol | A3-22 | A3-22 |
| | Valve seats, 2¼ litre Diesel | A2-23 | A2-23 |
| | Valve timing, 2¼ litre Petrol | — | A1-27 |
| | Valve timing, 2.6 litre Petrol | — | A3-25 |
| | Valve timing, 2¼ litre Diesel | — | A2-27 |
| | Ventilator, windscreen | Q1-9 | — |
| | Vertical drive shaft gear, 2¼ litre Petrol | A1-18 | — |
| | Vertical drive shaft gear, 2¼ litre Diesel | A2-18 | — |
| | Voltage control box | N1-16 | — |
| **W** | Warning light, fuel, Diesel | P1-1; P1-1A | — |
| | Water pump, 2¼ litre Petrol | A1-11 | K1-2 |
| | Water pump, 2.6 litre Petrol | A3-11 | K1-2 |
| | Water pump, 2¼ litre Diesel | A2-11 | K1-2 |
| | Water temperature gauge | P1-1; P1-1A | — |
| | Wheel alignment, front | — | G1-2 |
| | Wheel cylinder, 10 in. brakes, front and rear | H1-10 | H1-10 |
| | Wheel cylinder, 11 in. brakes, front | H1-10A | H1-10A |
| | Wheel cylinder, 11 in. brakes, rear, Series II | H1-10B | H1-10B |
| | Wheel cylinder, 11 in. brakes, rear, Series IIA | H1-10C | H1-10C |
| | Wheel, road | R1-1; R1-2 | — |

# DETAILED INDEX


| | Description | Operation Number | |
|---|---|---|---|
| | | Remove/Refit | Check/Overhaul |
| **W** | Wheel, steering | G1-3 | — |
| | Windscreen | Q1-4 | — |
| | Windscreen fastener | Q1-4 | — |
| | Windscreen wiper | N1-19 | — |
| | Windscreen ventilator | Q1-9 | — |
| | Wing, front | Q1-3 | — |
| | Withdrawal, clutch | C1-14 | C1-15 |

ISBN 1 85520 1100
Printed and Issued in England
by
Brooklands Books Ltd.
PO Box 146, Cobham,
Surrey, KT11 1LG,
England
With the kind permission of
Rover Group Limited